Inductive sensor
with extended switching distance
BI2-EG08K-AP6X-V1131

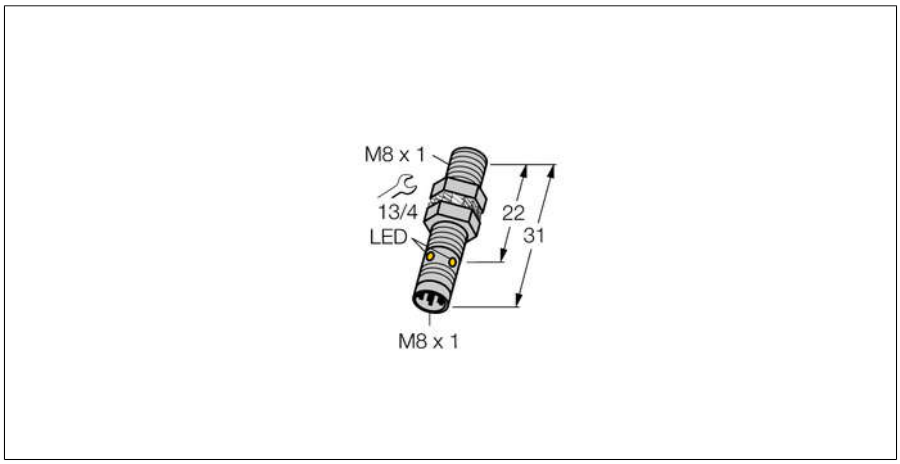

- **Threaded barrel, M8 x 1**
- **Stainless steel, 1.4427 SO**
- **Large detection range**
- **3-wire DC, 10…30 VDC**
- **NO contact, PNP output**
- **Male M8 x 1**

Wiring diagram

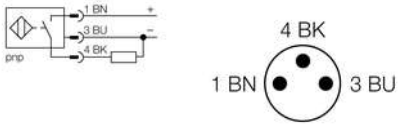

Type code	BI2-EG08K-AP6X-V1131
Ident no.	4669450
Rated operating distance Sn	2 mm
Mounting condition	flush
Assured sensing range	≤ (0,81 x Sn) mm
Correction factors	St37 = 1; Al = 0.3; stainless steel = 0.7; Ms = 0.4
Repeatability	≤ 2 % of full scale
Temperature drift	10 %
Hysteresis	3…15 %
Ambient temperature	-25…+70 °C
Operating voltage	10…30VDC
Residual ripple	≤ 10 % U_{ss}
DC rated operational current	≤ 150 mA
No-load current I_0	≤ 15 mA
Residual current	≤ 0.1 mA
Rated insulation voltage	≤ 0.5 kV
Short-circuit protection	yes/ cyclic
Voltage drop at I_e	≤ 1.8 V
Wire breakage / Reverse polarity protection	yes/ complete
Output function	3-wire, NO contact, PNP
Switching frequency	3 kHz
Design	threaded barrel, M8 x 1
Dimensions	31 mm
Housing material	stainless steel, 1.4427 SO
Material active area	Plastic, PA
Max. tightening torque housing nut	10 Nm
Connection	male, M8 x 1
Vibration resistance	55 Hz (1 mm)
Shock resistance	30 g (11 ms)
Protection class	IP67
MTTF	2283 years acc. to SN 29500 (Ed. 99) 40 °C
Switching state	LED yellow

Functional principle

Inductive sensors detect metal objects contactless and wear-free. For this, they use a high-frequency electromagnetic AC field that interacts with the target. Inductive sensors generate this field via an RLC circuit with a ferrite coil.

Edition • 2014-04-12T05:46:02+02:00

Inductive sensor
with extended switching distance
BI2-EG08K-AP6X-V1131

Distance D	2 x B
Distance W	3 x Sn
Distance T	3 x B
Distance S	1.5 x B
Distance G	6 x Sn

Diameter of the active area B	Ø 8 mm

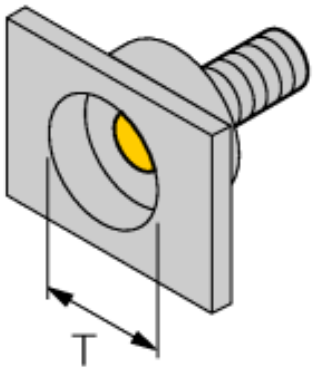

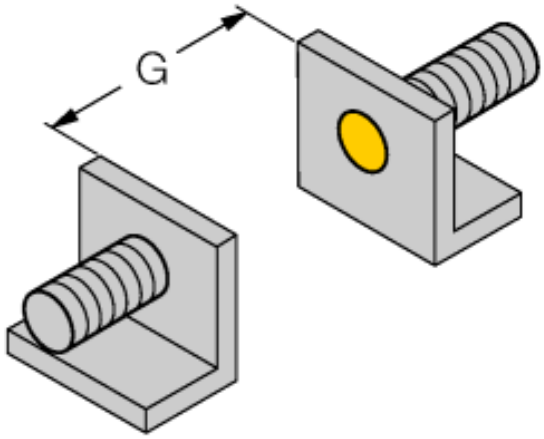

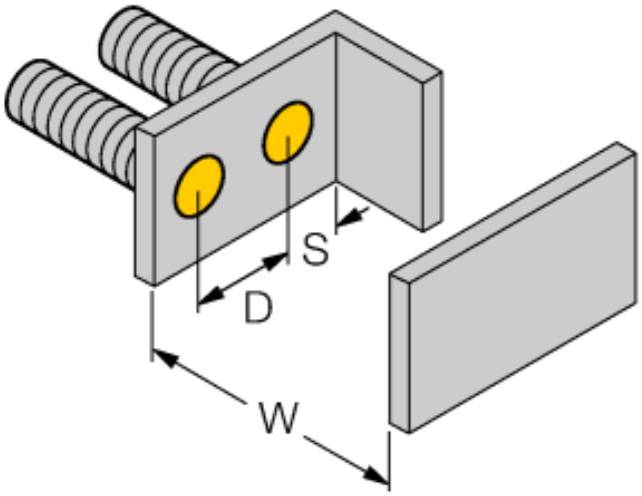

Edition • 2014-04-12T05:46:02+02:00

Accessories

Type code	Ident no.	Description	Dimension drawing
BST-08B	6947210	Fixing clamp for threaded barrel devices, with dead-stop; material: PA6	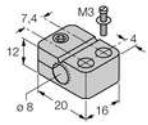
QM-08	6945100	Quick-mount bracket with dead-stop, chrome-plated brass, male thread M12 x 1. Note: The switching distance of proximity switches may be reduced through the use of quick-mount brackets.	
MW-08	6945008	Mounting bracket for threaded barrel devices; material: Stainless steel A2 1.4301 (AISI 304)	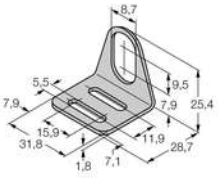
BSS-08	6901322	Mounting bracket for smooth and threaded barrel devices; material: Polypropylene	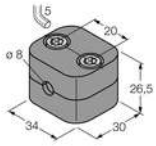

Wiring accessories

Type code	Ident no.	Description	Dimension drawing
PKGV3M-2/TEL	6625385	Connection cable, female M8, straight, 3-pin, stainless steel coupling nut, cable length: 2 m, sheath material: PVC, black; cULus approval; other cable lengths and qualities available, see www.turck.com	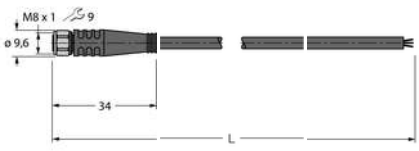

Edition • 2014-04-12T05:46:02+02:00