# E12495

## Connecting cable with socket

ADOGD040ZDS0005H04

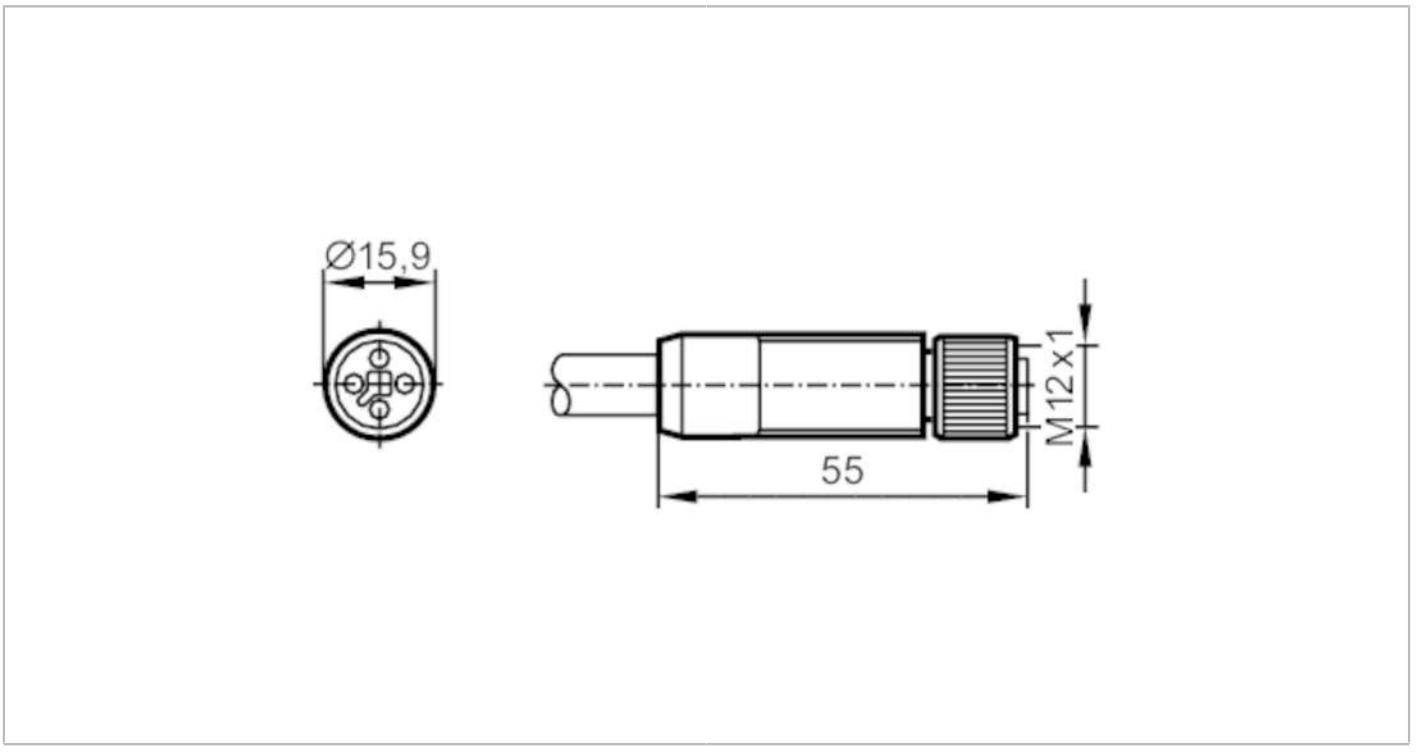


CE

| | | |
|---|---|---|
| **Application** | | |
| Special feature | | Gold-plated contacts |
| Design | | power cable, T-coded |
| **Electrical data** | | |
| Operating voltage | [V] | < 60 DC |
| Max. current load total | [A] | 12 |
| **Operating conditions** | | |
| Ambient temperature | [°C] | -25...85 |
| Protection | | IP 67 |
| **Mechanical data** | | |
| Weight | [g] | 545 |
| Dimensions | [mm] | 15.4 x 15.4 x 52.8 |
| Materials | | PP |
| Moulded-body material | | TPU |
| Material nut | | diecast zinc, nickel-plated |
| **Remarks** | | |
| Pack quantity | | 1 pcs. |

# E12495

## Connecting cable with socket

**ADOGD040ZDS0005H04**

### Electrical connection

Cable: 5 m, PUR, black, Ø 8 mm; 4 x 1.5 mm²

### Electrical connection - socket

Connector: 1 x M12, straight; coding: T; Moulded body: TPU; Locking: diecast zinc, nickel-plated; Contacts: gold-plated




### Connection

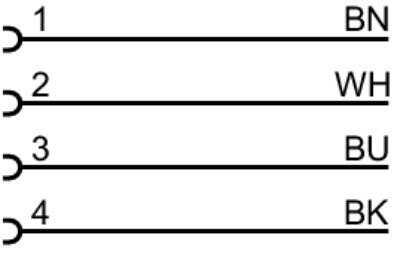


| | Core colours : |
|---|---|
| BK = | black |
| BN = | brown |
| BU = | blue |
| WH = | white |