Lovato electric
ENERGY AND AUTOMATION

BFA09570400



Product designation		Open frame
Product type designation		BFA095
Electrical features		
Maximum operating current (≤440V)	A	160
Relay adj range	A	46-65
Components		
Contactor standard supplied		BF9500A / BF9500A / BF6500A
Thermal relay standard supplied		No
Thermal relay to purchase separately		RF110
Auxiliary contact standard supplied		BFX1020 / BFX1011 / BFX1011
Contact characteristics		
IEC standard motor powers		
230V	kW	45
400V	kW	90
440V	kW	90
500V	kW	110
Mechanical features		
Weight	g	6900
Dimensions		

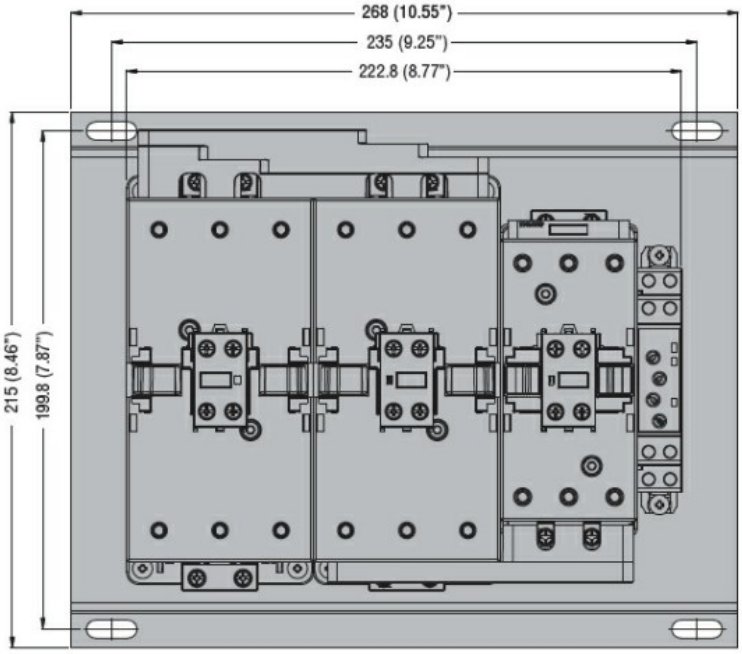

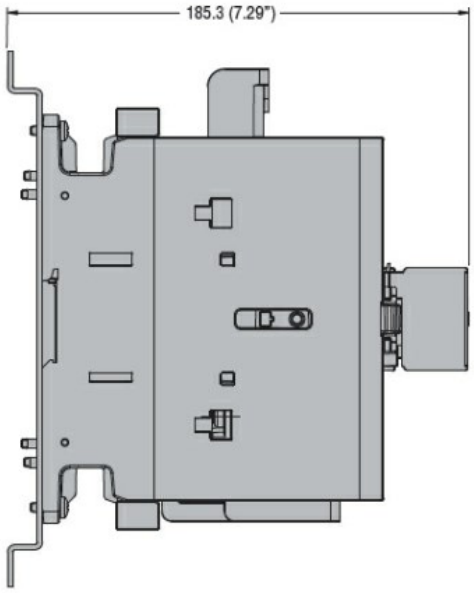

Wiring diagrams

The characteristics described in this document are subject to updates or modifications at any time. The descriptions, technical and functional information, illustrations and instructions in this brochure are purely illustrative, and are consequently not contractually binding

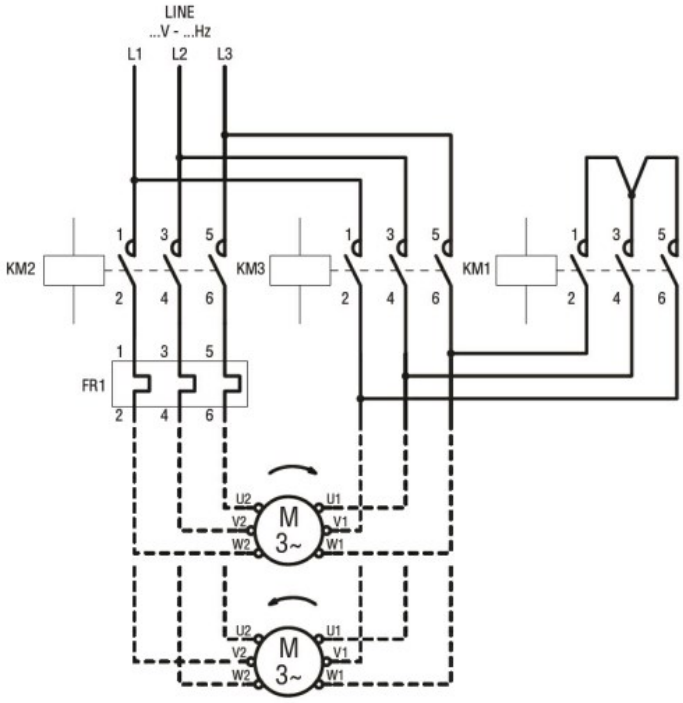

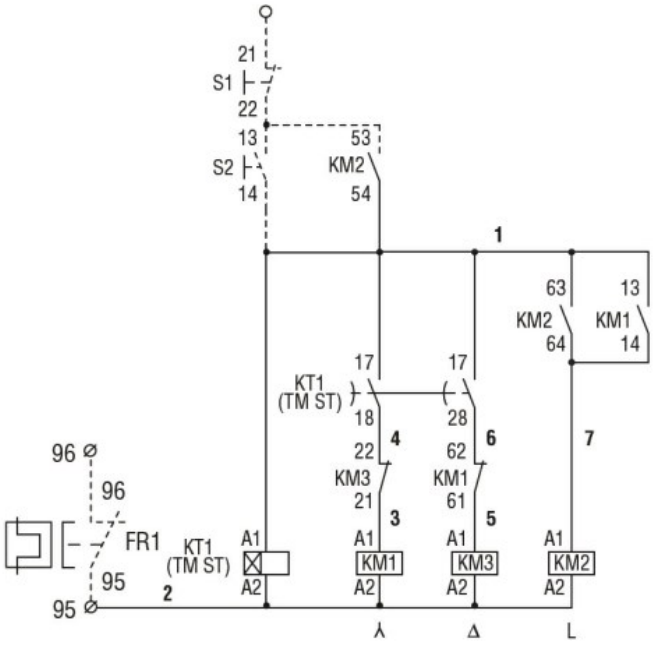

Certifications and compliance

Compliance

	IEC/EN 60947-1
	IEC/EN 60947-4-1

Certificates

/

ETIM classification

ETIM 8.0	EC001037 - Motor starter/Motor starter combination

The characteristics described in this document are subject to updates or modifications at any time. The descriptions, technical and functional information, illustrations and instructions in this brochure are purely illustrative, and are consequently not contractually binding