NU 2211 ECP

Popular item
SKF Explorer

Dimensions

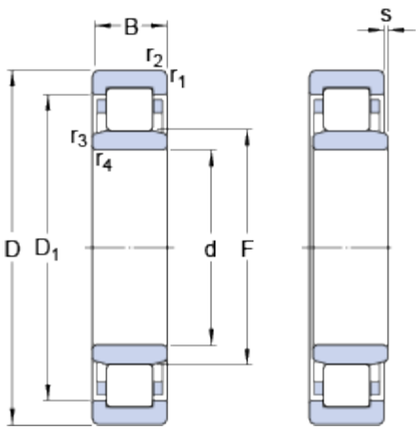

d		55	mm
D		100	mm
B		25	mm
D_1	≈	85.7	mm
F		66	mm
$r_{1,2}$	min.	1.5	mm
$r_{3,4}$	min.	1.1	mm
s	max.	1.5	mm

Abutment dimensions

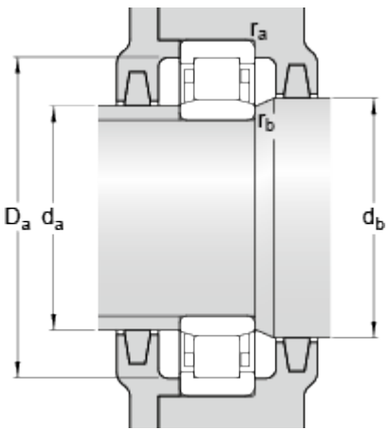

d_a	min.	62	mm
d_a	max.	64	mm
d_b	min.	68	mm
D_a	max.	91.4	mm
r_a	max.	1.5	mm
r_b	max.	1	mm

Calculation data

Basic dynamic load rating	C	114	kN
Basic static load rating	C_0	118	kN
Fatigue load limit	P_u	15.3	kN
Reference speed		7500	r/min
Limiting speed		8000	r/min
Calculation factor	k_r	0.2	
Limiting value	e	0.3	
Axial load factor	Y	0.4	

Mass

Mass bearing	0.79	kg

Associated products

Angle ring	HJ 2211 EC