stay connected

D/A-CONVERTER 8-BIT - OUTPUT 4 ... 20MA

IN: 8 Bit - OUT: 4 ... 20mA

D/A converter
8 Bit
4...20 mA

Input and output galvanically separated

Link to Product

Illustration



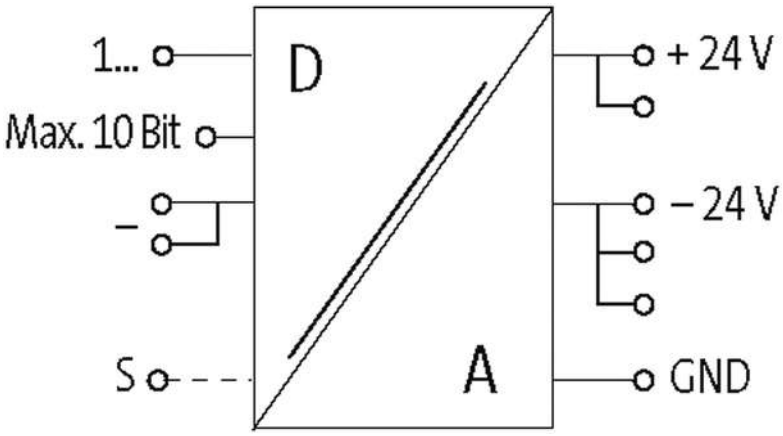

The information in this brochure has been compiled with the utmost care.
Liability for the correctness completeness and topicality of the information is restricted to gross negligence. Version: 06/17

Murrelektronik Ltd. | Pendlebury Industrial Estate, Albion Street, Swinton | Manchester M27 4FG | Fon +44 161 72831-33 | Fax +44 161 72831-30 | shop@murrelektronik.co.uk | shop.murrelektronik.co.uk

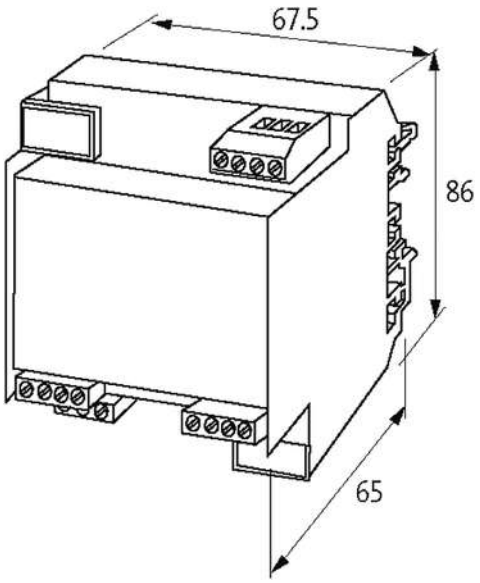

Product may differ from Image

Input	
Input signal	0...30 V DC (with LED display)
Input current	max. 10 mA/Bit
General data	
Test isolation voltage	2.5 kV
Mounting method	DIN-rail mountable (EN 60715)
Temperature range	0...+50 °C
Dimensions H × W × D	65×67.5×86 mm
Output	
Output current	max. 40 mA (0...10 V DC); max. 20 mA (0...20 mA), 4...20 mA
Description	
Functional description	The maximum output signal of converters with voltage output can be adjusted to the operating voltage minus 2 V. The outputs are short-circuit protected and overload protected due to internal current limiting.
Commercial data	
country of origin	CZ
customs tariff number	85437090
EAN	4048879028615
eClass	27210990
minimum order quantity	1

The information in this brochure has been compiled with the utmost care.
Liability for the correctness completeness and topicality of the information is restricted to gross negligence. Version: 06/17

Murrelektronik Ltd. | Pendlebury Industrial Estate, Albion Street, Swinton | Manchester M27 4FG | Fon +44 161 72831-33 | Fax +44 161 72831-30 | shop@murrelektronik.co.uk | shop.murrelektronik.co.uk