TECO

E510

IP 20/NEMA 1 & IP 66/NEMA 4X
Compact Vector Control Drive



TAIWAN EXCELLENCE 2012

APPLICATIONS

General multi-function model IP 20/NEMA 1

- Textiles
- Woodworking
- Small Handling Machine
- Simple Metal Processing
- Machine Tools
- Packaging & Labeling
- Food Processing
- Fan & Pumps
- HVAC









Tough enclosure model IP 66/NEMA 4X

- Food processing : against washdown environment
- Textiles : against high heat and humid environment, like dyeing process
- Petrochemical industry : against corrosive environment
- Livestock industry : against washdown environment
- Woodworking manufacturing : against dusty environment



Sealed Design
High level of waterproof and dustproof







Model Identification

E510	2	P5		H	1	F	N4S
	Input Voltage	Horse Power		Type	Power Supply	Noise Filter	Appearance
E510 series	2: 200V class 4: 400V class	P5: 0.5 HP 01: 1 HP 02: 2 HP 03: 3 HP 05: 5 HP	08: 7.5 HP 10: 10 HP 15: 15 HP 20: 20 HP 25: 25 HP	H: Standard	1: Single-phase 3: Three-phase Blank: Single-/ Three-phase	Blank: None F: Built-in	N4S: IP66,built-in power switch and VR N4: IP66,without built-in power switch or VR N4R: IP66,built-in VR, without power switch Blank: IP20

Capacity Range

Power Rating	0.4kW 0.5HP	0.75kW 1HP	1.5kW 2HP	2.2kW 3HP	3.7kW 5HP	5.5kW 7.5HP	7.5kW 10HP	11kW 15HP	15kW 20HP	18.5kW 25HP
E510	200V 1-phase (with filter)									
	200V 1-/ 3-phase									
					200V 3-phase					
		400V 3-phase								

Features and Benefits

Features		Benefit
Capability	32 bit RISC Processor with an advanced IGBT power switching technology	Advanced sensorless vector control, providing a powerful starting torque at low frequency with high performance operation at the highest efficiency.
	Output frequency range is 0-650Hz	
	Power range: 200V 0.4~15kW (0.5HP~20HP) 400V 0.75~18.5kW (1HP~25HP)	
H/W Function	The latest generation of IGBT power module	New generation of IPM/ PIM power module can reach higher efficiency of switching and compact design of inverters.
	With 7-segment *5 display panel	From this information, users can be easy to understand the usage state of inverters.
	Standard built-in VR knob	Directly frequency setting and simple to adjust speed
	Built-in EMC filter in compliance with IEC/ EN 61800-3 & 61800-5-1	Lower electromagnetic interference effectively
	Fan control (set by parameter)	Fan control is based on the ambient temperature of key components to lower noise and avoid unnecessary energy wasted.
S/W Function	Soft-PWM modulation	Reduce audible motor noise at low carrier frequency
	Integrated safety stop and fire mode functions	Provide advanced application functions under the circumstance of emergency or fire.
	Auto carrier frequency switching	Built-in sensors detection on operation temperature to avoid the probability of inverter tripping in too high temperature.
	Built-in PID controller	Provide constant control requirements of frequency, pressure, flow, air volume in applications, such as HVAC
	Built-in PLC function	Simple process control to save the cost of external PLC
Expansion Flexibility	Built-in Modbus Communication (RS485)	Fast parameters copying to reduce time of installation, maintenance and replacement.
	PC-software/ Copy unit	
Quality	External cooling heatsink	Reduce the possibility of unknown objects entering to avoid damaging components and improve product reliability.

Single-phase/ Three-phase

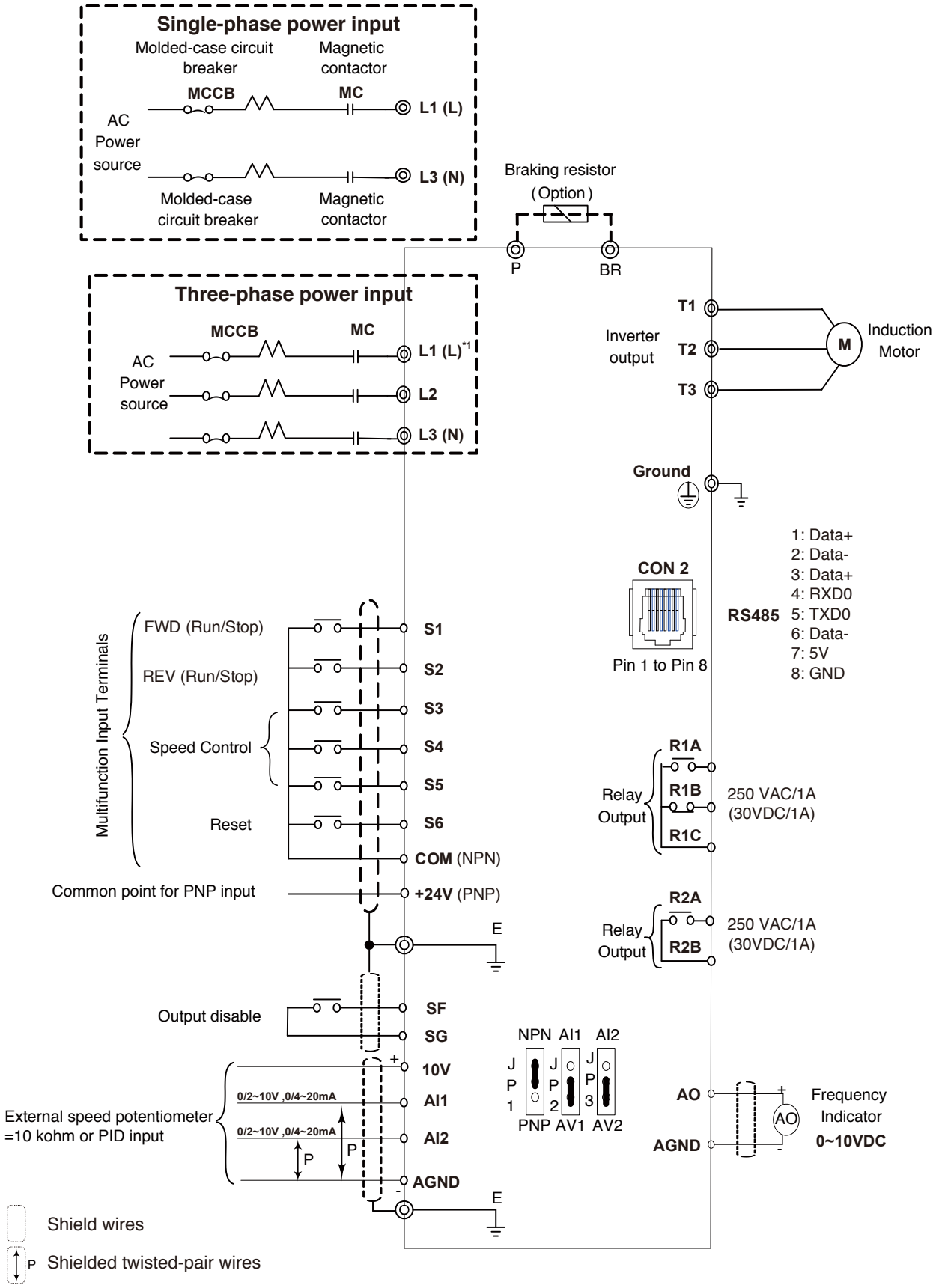

*1: Power input terminal is L1, L2, L3 in models of 200V 7.5HP~20HP/ 400V 7.5HP~25HP.

General Specifications

Item		Description
Control Mode		V/F Control, Vector Control
Frequency	Output Frequency	0.01~599.00Hz
	Starting Torque	150%/3Hz(V/F), 150%/1Hz(Vector)
	Speed Control Ratio	1:50
	Setting Resolution	Digital input: 0.01Hz
		Analog input:0.06Hz/60Hz
	Setting	Keypad: Set directly with▲▼ keys or the VR on the keypad
		External Input Terminlas: AI1/AI2(0/2~10V,0/4-20mA) Multifunction input up/down function(Group3)
		Setting frequency by communication method.
	Frequency Limit	Lower and upper frequency limits 3 jump frequency settings.
Run	Operation Set	Keypad run, stop button
		External terminals: Multi-function operation mode (2 or 3 wire selection) Jog operation
		Run signal by communication method.
Main Control Features	V/F Curve Setting	18 fixed curves and one customized curve
	Carrier Frequency	1～16KHz
	Acceleration and Deceleration Control	2 sections of acceleration/ deceleration time setting (0.1~3600.0 Sec.) 4 sections of S curve setting
	Multifunction Input	29 functions (refer to group 3 in the manual)
	Multifunction Output	21 functions (refer to group 3 in the manual)
	Multifunction Analog Output	5 functions (refer to group 4 in the manual)
	Main Features	Overload Detection,16 preset speeds, Auto-run, Acc/Dec Switch, Main/Alt Run Command Select, Main/Alt Frequency Command Select ,PID control, Torque Compensation, V/F Start Frequency, Slip Compensation, Fault Reset.
	Efficiency	Meet IEC/EN 61800-9-2 IE2 Class
Display	LED	Display: parameter / parameter value / frequency / line speed / DC voltage / output voltage / output current / PID feedback / input and output terminal status / Heat sink temperature / Program version / Fault Log.
	LED Status Indicator	Run / Stop / Forward / Reverse ,and etc.
Protective Functions	Overload Protection	The relays to protect the motor and the inverter. (150%/1min)
	Over Voltage	200V class: >410V , 400V class: >820V
	Under Voltage	200V class: <190V , 400V class: <380V
	Momentary Power Loss Restart	Inverter auto-restart after a momentary power loss.
	Stall Prevention	Stall prevention for Acceleration/ Deceleration/ Operation.
	Short-circuit Output Terminal	Electronic Circuit Protection
	Grounding Fault	Electronic Circuit Protection
	Other Protection Functions	Protection for overheating of heat sink, the carrier frequency decreasing with the temperature function, fault output, reverse prohibit, prohibit for direct start after power up and error recovery ,parameter lock up
	All frames include brake transistor	
Communication control		Standard built-in RS485 communication (Modbus), One to one or One to many control.
Environment	Operating temperature	IP 20 / NEMA 1 : -10~50°C (without dustproof sticker) -10~40°C (with dustproof sticker) IP 66 / NEMA 4X : -10~50°C
	Storage temperature	-20~60°C
	Humidity	95% RH or less (no condensation)(Compliance with IEC 60068 - 2-78)
	Shock	1.0G, in compliance with IEC 60068-2-6
	Enclosure	IP 20 / NEMA 1 and IP 66 / NEMA 4X
Certification		CE/cUL/RCM/UKCA/RoHS

Basic Specifications IP 20/ NEMA 1

Model	200V Class: Single-phase			
	E510-□□□- H1F			
	2P5	201	202	203
Horse Power (HP)	0.5	1	2	3
Suitable Motor Capacity (KW)	0.4	0.75	1.5	2.2
Rated Output Current (A)	3.1	4.5	7.5	10.5
Rated Capacity (KVA)	1.2	1.7	2.9	4.0
Input Voltage Range(V)	Single-phase 200~240V, 50/60HZ			
Allowable Voltage Fluctuation	-15%~+10%			
Output Voltage Range(V)	Three-phase 0~240V			
Input Current (A)	8.5	12	16	23.9
Allowable Momentary Power Loss Time (Sec.)	2.0		2.0	
Enclosure	IP 20 / NEMA 1			
Frame Size	1		2	

Model	200V Class: Single-/Three-phase			
	E510-□□□- H			
	2P5	201	202	203
Horse Power (HP)	0.5	1	2	3
Suitable Motor Capacity (KW)	0.4	0.75	1.5	2.2
Rated Output Current (A)	3.1	4.5	7.5	10.5
Rated Capacity (KVA)	1.2	1.7	2.9	4.0
Input Voltage Range(V)	Single-/Three-phase 200~240V, 50/60HZ			
Allowable Voltage Fluctuation	-15%~+10%			
Output Voltage Range(V)	Three-phase 0~240V			
Input Current (A)	8.5/4.5	12/6.5	16/11	23.9/12.5
Allowable Momentary Power Loss Time (Sec.)	2.0		2.0	
Enclosure	IP 20 / NEMA 1			
Frame Size	1		2	

Model	200V Class: Three-phase					
	E510-□□□- H3					
	202	205	208	210	215	220
Horse Power (HP)	2	5	7.5	10	15	20
Suitable Motor Capacity (KW)	1.5	3.7	5.5	7.5	11	15
Rated Output Current (A)	7.5	17.5	26	35	48	64
Rated Capacity (KVA)	2.9	6.7	9.9	13.3	20.6	27.4
Input Voltage Range(V)	Three-phase 200~240V, 50/60HZ					
Allowable Voltage Fluctuation	-15%~+10%					
Output Voltage Range(V)	Three-phase 0~240V					
Input Current (A)	11	20.5	33	42	57	70
Allowable Momentary Power Loss Time (Sec.)	2.0	2.0	2.0		2.0	
Enclosure	IP 20 / NEMA 1					
Frame Size	1	2	3		4	

Model	400V Class: Three-phase								
	E510-□□□- H3 (F)								
	401	402	403	405	408	410	415	420	425
Horse Power (HP)	1	2	3	5	7.5	10	15	20	25
Suitable Motor Capacity (KW)	0.75	1.5	2.2	3.7	5.5	7.5	11	15	18.5
Rated Output Current (A)	2.3	3.8	5.2	8.8	13.0	17.5	24	32	40
Rated Capacity (KVA)	1.7	2.9	4.0	6.7	9.9	13.3	19.1	24	30.5
Input Voltage Range(V)	Three-phase 380~480V, 50/60HZ								
Allowable Voltage Fluctuation	-15%~+10%								
Output Voltage Range(V)	Three-phase 0~480V								
Input Current (A)	4.2	5.6	7.3	11.6	17	23	31	38	48
Allowable Momentary Power Loss Time (Sec.)	2.0		2.0		2.0			2.0	
Enclosure	IP 20 / NEMA 1								
Frame Size	1		2		3			4	

IP 66/ NEMA 4X

Model	200V Class: Single-phase			
	E510-□□□- H1F(N4)(S)			
	2P5	201	202	203
Horse Power (HP)	0.5	1	2	3
Suitable Motor Capacity (KW)	0.4	0.75	1.5	2.2
Rated Output Current (A)	3.1	4.5	7.5	10.5
Rated Capacity (KVA)	1.2	1.7	2.9	4.0
Input Voltage Range(V)	Single-phase 200~240V, 50/60HZ			
Allowable Voltage Fluctuation	-15%~+10%			
Output Voltage Range(V)	Three-phase 0~240V			
Input Current (A)	8.5	12	16	23.9
Allowable Momentary Power Loss Time (Sec.)	2.0		2.0	
Enclosure	IP 66 / NEMA 4X			
Frame Size	1		2	

Model	200V Class: Single-/Three-phase			
	E510-□□□- H(N4R)			
	2P5	201	202	203
Horse Power (HP)	0.5	1	2	3
Suitable Motor Capacity (KW)	0.4	0.75	1.5	2.2
Rated Output Current (A)	3.1	4.5	7.5	10.5
Rated Capacity (KVA)	1.2	1.7	2.9	4.0
Input Voltage Range(V)	Single-/Three-phase 200~240V, 50/60HZ			
Allowable Voltage Fluctuation	-15%~+10%			
Output Voltage Range(V)	Three-phase 0~240V			
Input Current (A)	8.5/4.5	12/6.5	16/11	23.9/12.5
Allowable Momentary Power Loss Time (Sec.)	2.0		2.0	
Enclosure	IP 66 / NEMA 4X			
Frame Size	1		2	

Model	200V Class: Three-phase				
	E510-□□□- H3(N4)				
	205	208	210	215	220
Horse Power (HP)	5	7.5	10	15	20
Suitable Motor Capacity (KW)	3.7	5.5	7.5	11	15
Rated Output Current (A)	17.5	26	35	48	64
Rated Capacity (KVA)	6.7	9.9	13.3	20.6	27.4
Input Voltage Range(V)	Three-phase 200~240V, 50/60HZ				
Allowable Voltage Fluctuation	-15%~+10%				
Output Voltage Range(V)	Three-phase 0~240V				
Input Current (A)	20.5	33	42	57	70
Allowable Momentary Power Loss Time (Sec.)	2.0	2.0		2.0	
Enclosure	IP 66 / NEMA 4X				
Frame Size	2	3			

Model	400V Class: Three-phase								
	E510-□□□- H3 (F)(N4)(S) *N4S 400V class to 15HP only								
	401	402	403	405	408	410	415	420	425
Horse Power (HP)	1	2	3	5	7.5	10	15	20	25
Suitable Motor Capacity (KW)	0.75	1.5	2.2	3.7	5.5	7.5	11	15	18.5
Rated Output Current (A)	2.3	3.8	5.2	8.8	13.0	17.5	24	32	40
Rated Capacity (KVA)	1.7	2.9	4.0	6.7	9.9	13.3	19.1	24	30.5
Input Voltage Range(V)	Three-phase 380~480V, 50/60HZ								
Allowable Voltage Fluctuation	-15%~+10%								
Output Voltage Range(V)	Three-phase 0～480V								
Input Current (A)	4.2	5.6	7.3	11.6	17	23	31	38	48
Allowable Momentary Power Loss Time (Sec.)	2.0		2.0		2.0			2.0	
Enclosure	IP 66 / NEMA 4X								
Frame Size	1		2		3				

DIMENSIONS IP 20 / NEMA 1 (without filter series)

Unit: mm (inch)

Frame	W	W1	W2	H	H1	H2	D	D1	D2	E	Q1	Q2
Frame 1	90.6 (3.57)	80.5 (3.17)	80.5 (3.17)	163.6 (6.44)	153 (6.02)	173.5 (6.84)	149 (5.87)	137.8 (5.43)	-	48 (1.89)	4.3 (0.17)	4.3 (0.17)
Frame 2	128.7 (5.07)	118 (4.65)	118 (4.65)	187.6 (7.39)	177.6 (6.99)	197.5 (7.78)	150 (5.91)	133.8 (5.27)	141.8 (5.58)	48.2 (1.9)	4.5 (0.18)	4.5 (0.18)
Frame 3	186.9 (7.36)	175 (6.89)	176 (6.92)	260.9 (10.27)	249.8 (9.83)	273 (10.75)	197.2 (7.76)	184 (7.24)	189 (7.44)	76.7 (3.02)	4.5 (0.18)	4.5 (0.18)
Frame 4	224.6 (8.84)	207 (8.15)	207 (8.15)	321.6 (12.66)	303.5 (11.95)	330.9 (13.03)	200.7 (7.9)	187.5 (7.38)	192.5 (7.58)	94 (3.7)	6 (0.24)	6 (0.24)

Frame 1 (weight:1.7Kg)

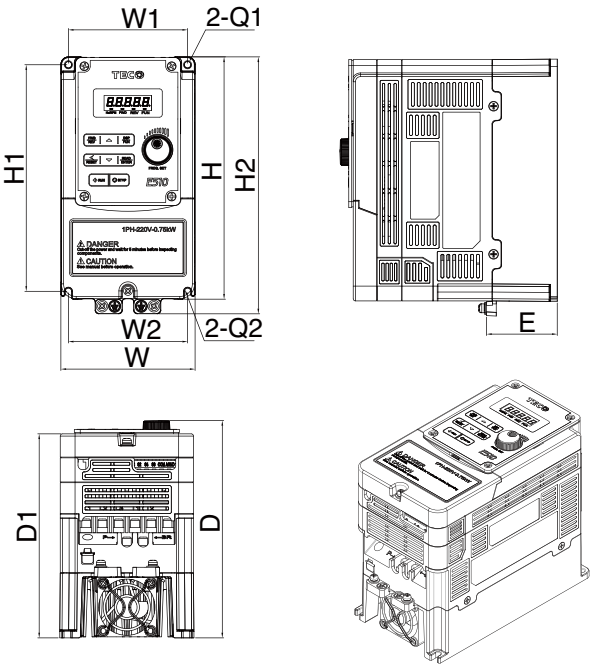

Frame 2 (weight:2.5Kg)

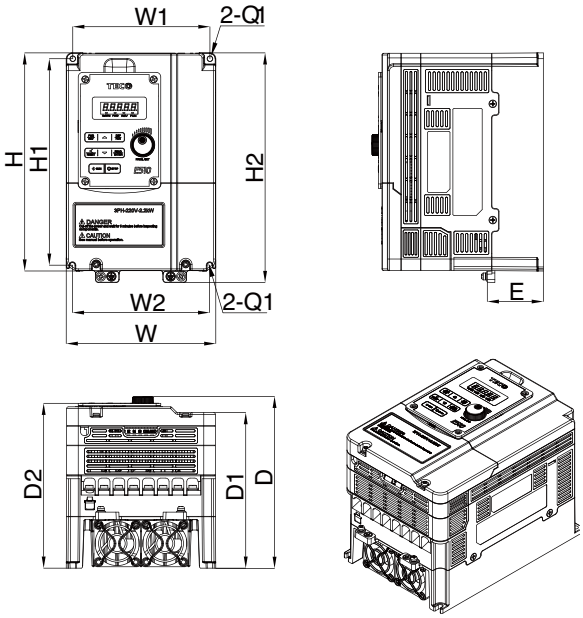

Frame 3 (weight:6.5Kg)

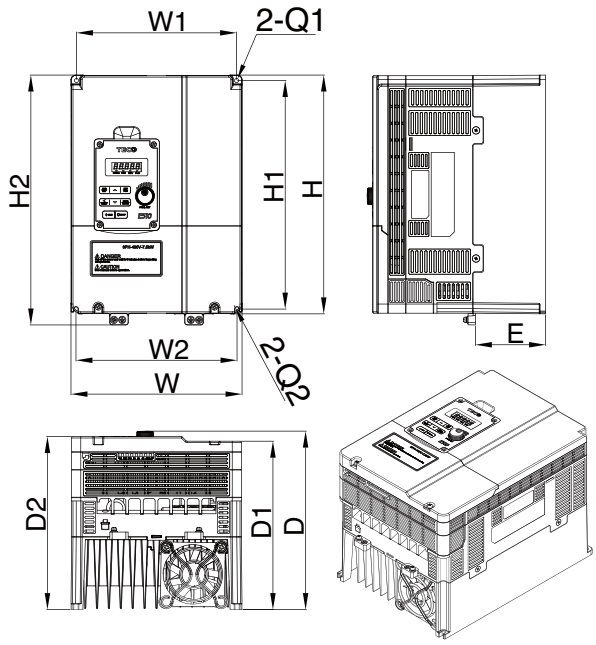

Frame 4 (weight:10.5Kg)

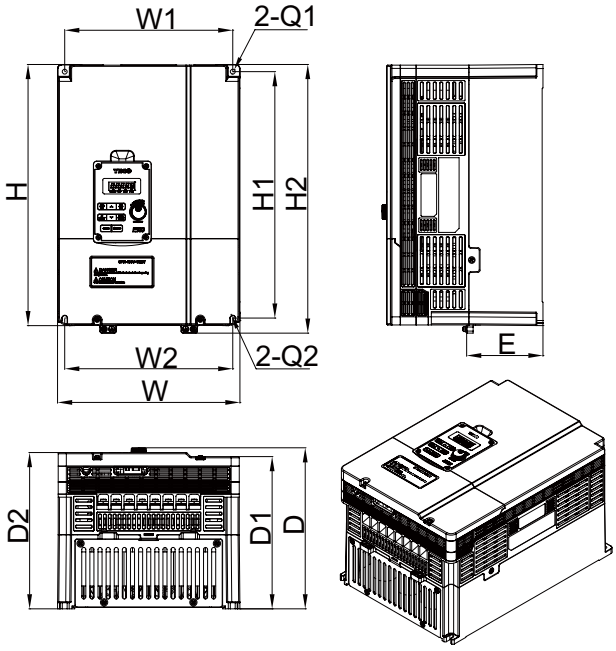

IP 66 / NEMA 4X

Unit: mm (inch)

Frame	W	W1	H	H1	H2	D	D1	D2	D3	Q1	Q2	Q3
Frame 1	150.8 (5.94)	133.3 (5.25)	248.7 (9.79)	230.2 (9.06)	214.2 (8.43)	183 (7.20)	200 (7.87)	200 (7.87)	49.5 (1.95)	5.4 (0.21)	5.4 (0.21)	10.6 (0.42)
Frame 2	198 (7.80)	115 (4.53)	337.9 (3.30)	335 (13.19)	315 (12.40)	218.4 (8.60)	235.2 (9.26)	235.2 (9.26)	79.8 (3.14)	7 (0.28)	7 (0.28)	5.98 (0.24)
Frame 3	222.8 (8.77)	140 (5.51)	466.3 (18.36)	460 (18.11)	440 (17.32)	246.6 (9.71)	266.5 (10.49)	263.5 (10.37)	96 (3.78)	7 (0.28)	7 (0.28)	12.68 (0.50)

*N4R model has no built-in power switch, so D1 is not applicable.
N4 model has no built-in power switch and VR, so D1 and D2 are not applicable.

Frame 1 (weight:2.9Kg)

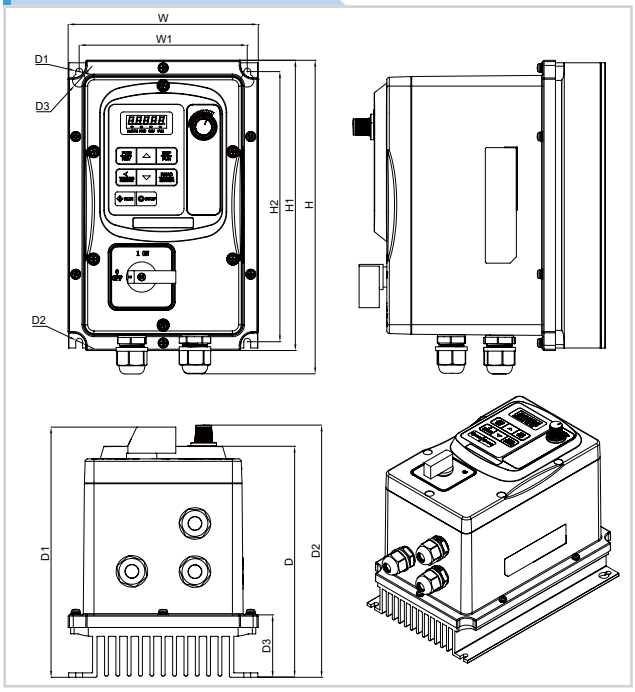

Frame 2 (weight:5.98Kg)

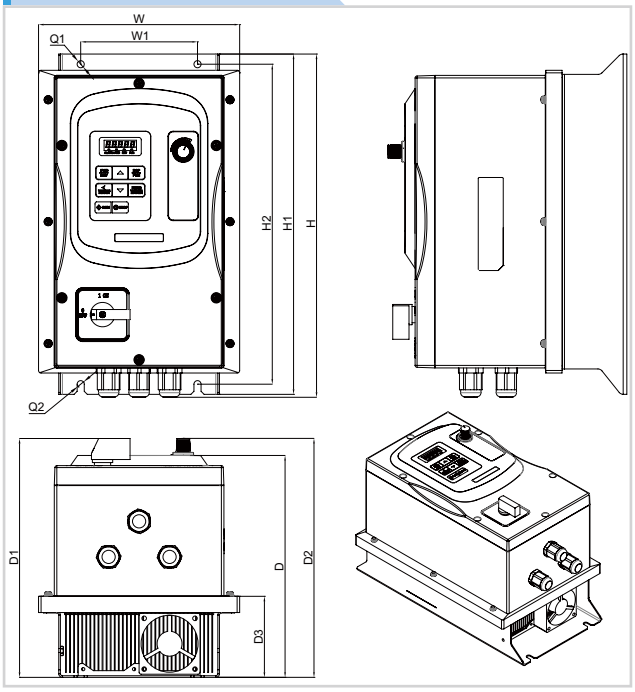

Frame 3 (weight:12.68Kg)

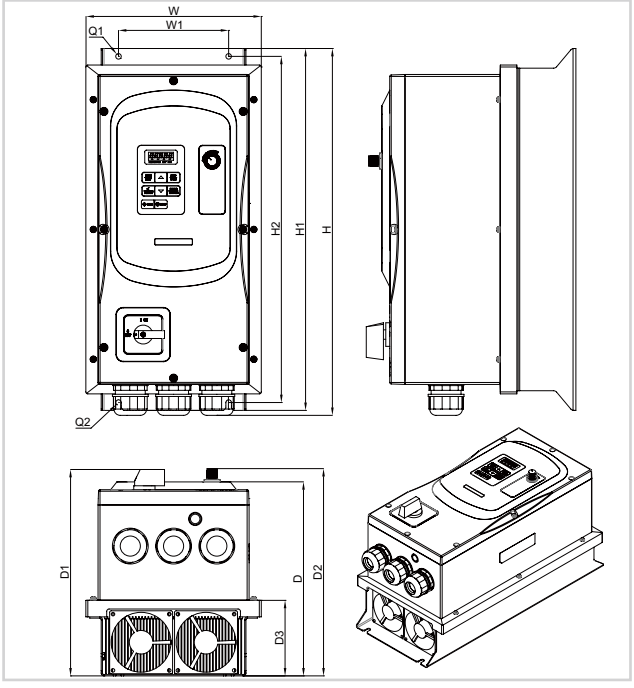

ACCESSORIES

Accessories	Model	Function	Notes
Keypad extension cable	JN5-CB-01M	Keypad extension cable for 510 series	1m
	JN5-CB-02M		2m
	JN5-CB-03M		3m
	JN5-CB-05M		5m
NEMA Kits	JN5-NK-E01	Mechanical device consisting of anti-dust cover on the upper part and wiring box on the bottom to meet NEMA 1	Only for frame 1
	JN5-NK-E02		Only for frame 2
	JN5-NK-E03		Only for frame 3
	JN5-NK-E04		Only for frame 4
Copy module	JN5-CU	① Duplicating parameters setting in one inverter to another inverter ② As a remote keypad to be used ③ Using RJ45 line to connect inverter	
Communication modules	JN5-CM-PDP	For connection of Profibus DP communication protocol	For 510 series
	JN5-CM-TCPIP	For connection of TCP/IP communication protocol	
	JN5-CM-DNET	For connection of DeviceNet communication protocol	
	JN5-CM-CAN	For connection of CANopen communication protocol	
	JN5-CM-EIP	For connection of EtherNet/IP communication protocol	
RJ45 to USB connection cable	JN5-CM-USB	Using the TECO exclusive PC-software line	1.8m



Copy Unit (JN5-CU)



RJ45 to USB (JN5-CM-USB)

MEMO



Distributor

TECO

TECO ELECTRIC & MACHINERY CO., LTD.

TECO GO ECO

10F, No. 3-1, Park St., Nan-Kang, Taipei 115, Taiwan
TEL : 886-2-6615-9111Ext.1725 FAX : 886-2-6615-1033
http://www.teco.com.tw

Specifications covered in this brochure may be subject to change without notice.

GJ-62-12 2021-06-05