178 MICROSWITCHES
182 TACTILE SWITCHES
186 22MM CONTROL SWITCHES
191 FOOT SWITCHES
193 LIMIT SWITCHES
203 PIEZO SWITCHES AND KEYPADS

30mm wide pre-wired limit switches

Product overview

- 30mm width
- Pre wired. 1M cable standard
- For 2M cable add suffix /2
- Metal casing
- Rated to IP67
- Snap action contacts
- cULus approved

CE 70



SPECIFICATION	
Rating	400V
Cable	PVC 1m 4x0.75mm²
Impulse withstand voltage	4kV
Working temperture	-25°C to +70°C
Switching frequency	3600 cycles/h
Load factor	0.5
Short circuit protection	6A gG fuse

IP67 METAL CASING	PLUNGER TYPE	MAX ACTUATION SPEED	ACTUATION / NC OPERATION
CE70.0.AM	Plain plunger	0.5ms^{-1}	15N/30N
CE70.0.BLM	Roller plunger with fixing nut	0.1ms^{-1}	10N/30N
CE70.0.BM	Roller plunger	0.1ms^{-1}	10N/30N
CE70.0.EM	Roller lever	1.5ms^{-1}	0.08Nm/0.28Nm
CE70.0.FM	Adjustable nylon roller lever	1.5ms^{-1}	0.08Nm/0.28Nm
CE70.0.GM	Adjustable rod lever	1.5ms^{-1}	0.08Nm/0.28Nm
CE70.0.HM	Adjustable rod lever	1.5ms^{-1}	0.08Nm/0.28Nm

Plain plunger

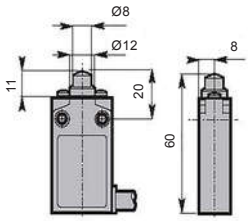

Roller plunger with fixing nut

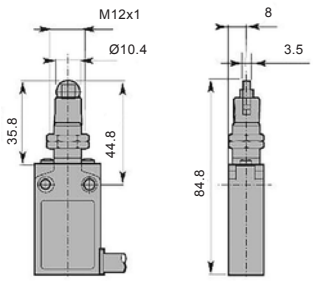

Roller plunger

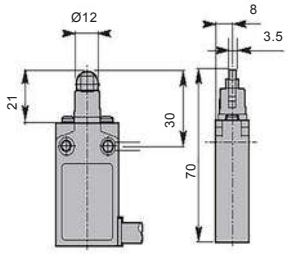

Roller lever

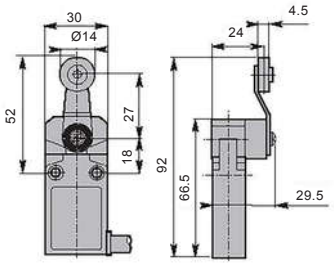

Adjustable nylon roller lever

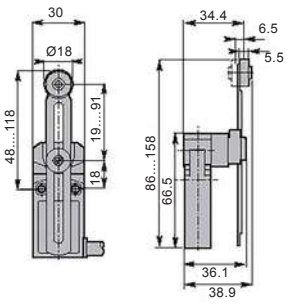

Adjustable rod lever

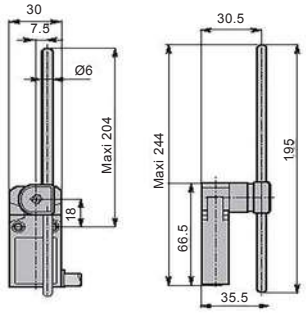

Adjustable rod lever

