REVISION HISTORY			
REV	DATE	BY	DESCRIPTION
I	21AUG2019	ZAA/RW	PRN: P2019-2094

NOTES:

A. MATERIAL AND FINISH:
TOP HOUSING, BOTTOM HOUSING - PC/ABS
PIVOT PINS - STEEL, ZINC PLATED
CAM, TRIGGER - STEEL, SEALED
SPRINGS - STAINLESS STEEL PASSIVATED
TRIGGER INTERLOCK LEVER - GLASS FILLED NYLON
BISTABLE SPRING RETAINER - DIECAST ZINC
DRIVE CAM - BLACK ACETAL
OUTPUT CAM - WHITE ACETAL

B. ELECTRICAL SPECIFICATIONS:
OPERATING VOLTAGE: 12 TO 24 VDC NOMINAL
TYPICAL OPERATING CURRENT: LESS THEN 500 mA AT 12 VDC.
PEAK / STALL OPERATING CURRENT: 1 A MAX (STALL LIMITED TO 1.4 SECONDS)
TOTAL STANDBY CURRENT: LOCKED / UNLOCKED: 5 mA
CONTROL SIGNAL HIGH (UNLOCK COMMAND): 6 VDC TO OPERATING VOLTAGE, 5.5 mA MAX
CONTROL SIGNAL LOW (LATCHED COMMAND): 0 TO 1 VDC (OPEN)
LATCH TRANSIT TIME TO RELEASE: 600 MILLISECONDS NO LOAD, 1.4 SECOND MAX.
OPERATING TEMPERATURE RANGE: -20C TO +60C

C. ELECTRICAL CONNECTIONS AND HOOKUP:
A BASIC SWITCH CONTROL ELECTRICAL HOOKUP DIAGRAM IS PROVIDED FOR REFERENCE.
CONSULT WITH A SOUTHCO REPRESENTATIVE FOR ADDITIONAL ELECTRICAL HOOKUP INFORMATION.
- CONNECT POWER, GROUND AND CONTROL SIGNAL WIRES TO AN APPROPRIATE DC POWER SUPPLY
- A DC POWER SUPPLY CAPABLE OF SUPPLYING 12 TO 24 VDC AT 1 AMP MINIMUM PER LATCH IS RECOMMENDED
- POWER MUST BE AVAILABLE TO OPERATE THE LATCH AND MUST REMAIN AVAILABLE DURING THE FULL TRANSIT TIME OF THE LATCH DURING LOCKING OR UNLOCKING

CAUTION! LATCH CAN BE DAMAGED IF WIRED INCORRECTLY, OR IF IMPROPER VOLTAGE IS APPLIED!
CONNECTOR PIN ASSIGNMENT: SEE CONNECTOR PINOUT TABLE AND PIN LOCATION DETAILS
STATUS INDICATION: OPEN COLLECTOR OUTPUT. RATING 12 TO 24 VDC. 50 mA MAX LOAD.

D. ELECTRICAL OPERATION:
TO UNLOCK OR RELEASE THE LATCH:
PROVIDE THE FOLLOWING CONTROL SIGNAL TO CONNECTOR PIN 3
- PROVIDE 12 TO 24 VDC (CONTROL SIGNAL HIGH) FOR A MINIMUM OF 50 MILLISECONDS
- THE CONTROL SIGNAL CAN REMAIN HIGH INDEFINITELY
- THE DELAYED RE-LOCK LATCH WILL STAY UNLOCKED FOR A MINIMUM OF 1 MILLISECOND OR AS LONG AS THE CONTROL SIGNAL IS HIGH.
- THE AUTO RE-LOCK LATCH WILL STAY UNLOCKED FOR A MINIMUM OF 1 MILLISECOND AND RE-LOCK IF THE CONTROL SIGNAL REMAINS HIGH.

TO LOCK THE DELAYED RE-LOCK LATCH AND TO ENABLE THE AUTO RE-LOCK LATCH FOR A NEW OPENING CYCLE:
PROVIDE THE FOLLOWING CONTROL SIGNAL TO CONNECTOR PIN 3
- PROVIDE CONTROL SIGNAL LOW FOR 50 MILLISECONDS. POWER MUST BE AVAILABLE DURING TRANSIT TO THE LOCKED POSITION.

E. OUTPUT FEEDBACK (LATCH AND DOOR STATUS):
- OPEN COLLECTOR OUTPUT. RATING 12 TO 24VDC. 50 MILLIAMPS MAX LOAD

CAUTION! TO PREVENT DAMAGE TO THE PRODUCT DO NOT EXCEED MAXIMUM LOADS STATED AND FOLLOW WIRING DIRECTIVES.

F. LATCH CONNECTOR:
MANUFACTURER: MOLEX, SERIES: MICRO-FIT 3.0
-3.0MM PITCH MICRO-FIT HEADER, DUAL ROW, 6 POSITIONS, MOLEX P/N:43045-0606 OR EQUIVALENT.
MATE CONNECTOR/WIRE HARNESS REQUIRED (NOT SUPPLIED)
-CONNECTOR: RECEPTACLE HOUSING, DUAL ROW, 6 POSITION 3MM : MOLEX:P/N 43025-0600
-CONTACTS: FEMALE CRIMP TERMINAL (SOCKET) MOLEX P/N 43030-0007

G. MOUNTING:
-MOUNT THE LATCH SECURELY USING TWO (2) SCREWS IN THE MOUNTING HOLES PROVIDED (SCREWS NOT PROVIDED)
-MOUNTING HOLES ARE AVAILABLE WITH THREAD TYPES OR THROUGH HOLES PER TABLE ON SHEET 2.
-MAXIMUM ALLOWABLE TORQUE ON THREADED MOUNTING SCREWS IS 5.6 Nm (50 in. lbs) FOR MOUNTING OPTIONS 1, 2 AND 3.
-MAXIMUM ALLOWABLE TORQUE ON THREADED MOUNTING SCREWS IS 2.3 Nm (20 in. lbs) FOR MOUNTING OPTION 7.

H. MECHANICAL OPERATION
THE LATCH IS PROVIDED WITH A MECHANICAL TRIGGER TO RELEASE THE LATCH.
THE MAXIMUM TRAVEL OF THE TRIGGER IS SHOWN ON SHEET 2. THE TRIGGER MOVES THROUGH ITS FULL TRAVEL DURING ELECTRICAL OPERATION OF THE LATCH.
ACCESSORIES ARE AVAILABLE (SOLD SEPARATE) FOR REMOTE ACTUATOR CABLE INSTALLATION (SEE DRAWING J-R4-EM-952 FOR MANUAL OVERRIDE BRACKET).
CAUTION! IT IS IMPORTANT TO NOT OBSTRUCT THE MOTION OF THE TRIGGER DURING ELECTRICAL OPERATION TO PREVENT LONGTERM DAMAGE TO THE ELECTRICAL COMPONENTS IN THE LATCH.

I. STRIKER ASSEMBLY SOLD SEPARATELY
REFER TO CUSTOMER DRAWING J-R4-90-709-20 FOR ADDITIONAL INFORMATION ON STAINLESS STEEL STRIKER AND DRAWING J-R4-90-804-10 FOR ADDITIONAL INFORMATION ON ZINC DIE CAST STRIKER.

J. KICK OUT FORCE UPON UNLOCKING FROM CLOSED POSITION: 5N APPROX.
HOLDING FORCE UPON UNLOCKING FOR PULL-TO-OPEN LATCH: APPROX RANGE 10N-20N

K. PACKAGED IN INDIVIDUAL BOXES OR ADD -1 TO PART NUMBER FOR BULK PACKAGING.

L. FOR SOUTHCO TYPE 4 AND 5 CABLE ASSEMBLIES, THE VARIABLE "TLC" = 14mm.
SEE DRAWING J-AC-C FOR DETAILS.

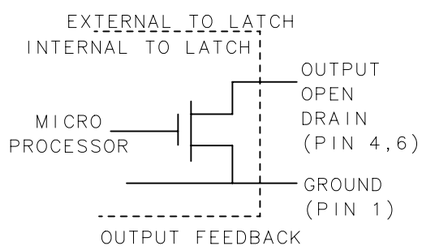

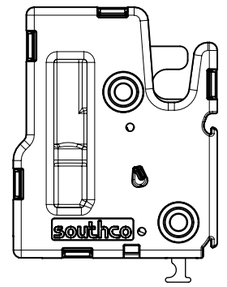

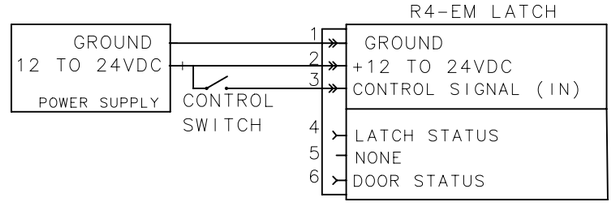

ELECTRICAL HOOKUP (OUTPUT/FEEDBACK)

CONNECTOR PINOUT	
PIN	FUNCTION
1	GROUND (-)
2	POWER (+)
3	CONTROL SIGNAL
4	LATCH STATUS
5	NONE
6	DOOR STATUS

CONNECTOR PINOUT		STANDARD OUTPUT ("S"=5)		REVERSE OUTPUT ("S"=5A)	
PIN	FUNCTION	OPEN	GROUND	OPEN	GROUND
4	LATCH STATUS	LOCKED	UNLOCKED	UNLOCKED	LOCKED
5	NONE	NOT APPLICABLE		NOT APLLICABLE	
6	DOOR STATUS	CLOSED	OPEN	OPEN	CLOSED

SEE SHEET 2 OF 2 FOR LATCH PART NUMBERS AND INSTALLATION INFORMATION

SURFACE AREA
VOLUME
PROPRIETARY ITEM
EXCEPT FOR USES EXPRESSLY GRANTED IN WRITING, INFORMATION DISCLOSED HEREON IS CONFIDENTIAL AND ALL RIGHTS, PATENT AND OTHERWISE, ARE RESERVED BY SOUTHCO, INC.

THIRD ANGLE PROJECTION
MILLIMETERS [IN]
TOLERANCES UNLESS OTHERWISE NOTED
ALL DIMENSIONS WITHOUT TOLERANCES ARE FOR REFERENCE ONLY.
PER ASME Y14.5M-1994

southco®
CONNECT·CREATE·INNOVATE

DESCRIPTION
R4-EM 9 SERIES
ELECTROMECHANICAL ROTARY LATCH

SIZE	SYSTEM	DWG NO.
A3	NX	J-R4-EM-9-1

DRAWN BY	DATE	SCALE	SHEET
DJK/IGS	01OCT2013	NTS	1 OF 2

REVISION HISTORY			
REV	DATE	BY	DESCRIPTION
1	21AUG2019	ZAA/RW	PRN: P2019-2094

ASSEMBLY PART NUMBER

R4-EM-TBA-1S0-P

"T" DESIGNATES TRIGGER STYLE
- 9A = AUTO RE-LOCK KICK-OUT
- 9D = DELAYED RE-LOCK KICK-OUT
- 9P = DELAYED RE-LOCK PULL TO OPEN

"B" DESIGNATES PIVOT PIN TYPE
- 1 = 1/4-20
- 2 = M6
- 3 = 7mm THRU
- 7 = 5.5mm THRU

"A" DESIGNATES ALTERNATIVE CONFIGURATIONS:
- BLANK = STANDARD CAM
- 3 = HIGH STRENGTH CAM

"S" DESIGNATES SENSOR OPTIONS
- 5 = DOOR AND TRIGGER SENSOR (STANDARD OUTPUT)
- 5A = DOOR AND TRIGGER SENSOR (REVERSE OUTPUT)

"P" DESIGNATES PACKAGING
- BLANK = INDIVIDUAL
- 1 = BULK

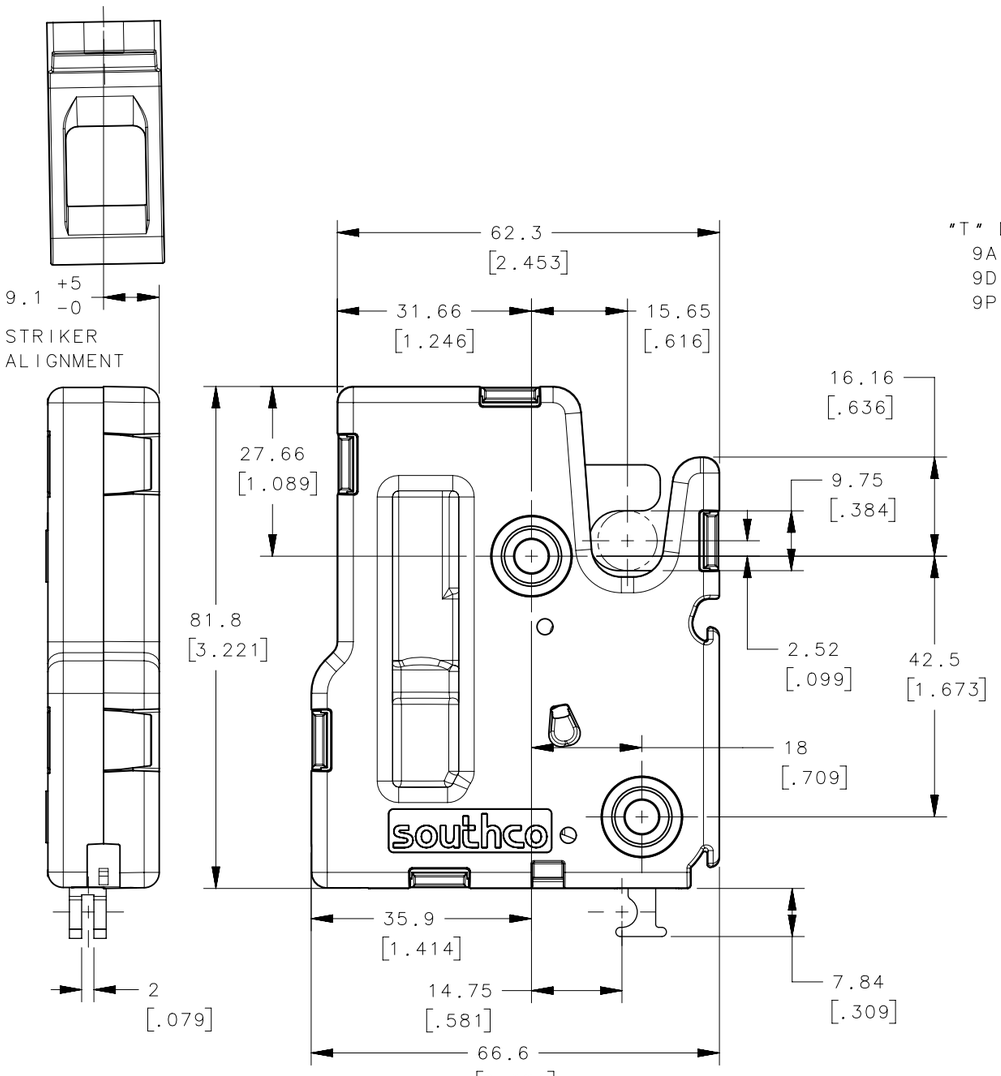

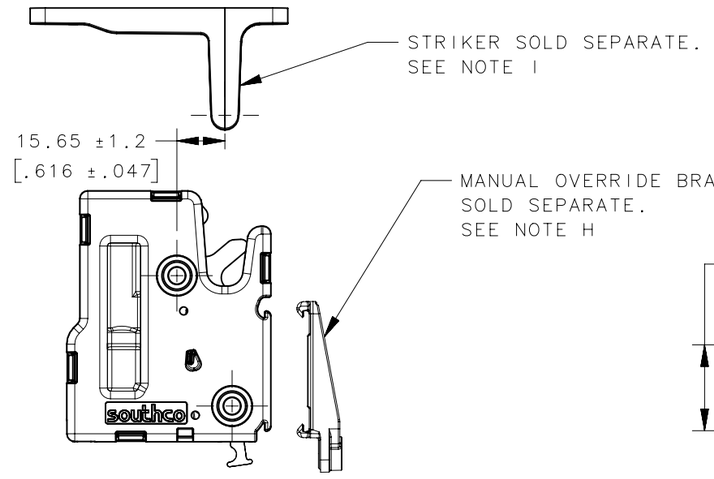

STRIKER R4-90-709-20 SHOWN
SCALE 1:2

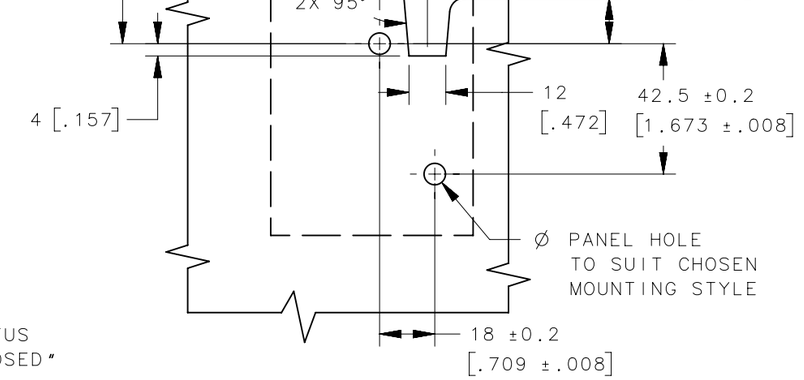

PANEL PREPARATION
SCALE 1:2

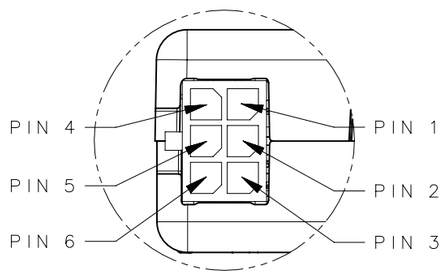

DETAIL A
SCALE 2:1

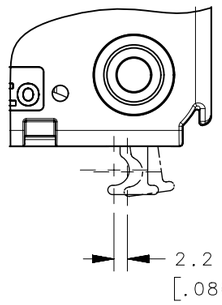

MANUAL OVERRIDE TRAVEL

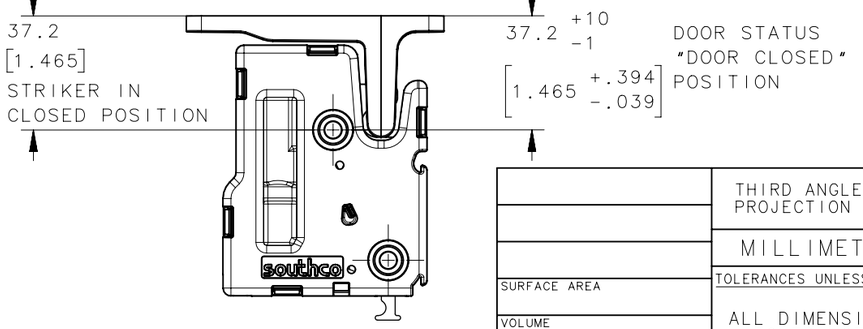

STRIKER IN LATCHED STATE
SCALE 1:2

SURFACE AREA	THIRD ANGLE PROJECTION	southco® CONNECT·CREATE·INNOVATE
VOLUME	MILLIMETERS [IN]	DESCRIPTION: R4-EM 9 SERIES ELECTROMECHANICAL ROTARY LATCH
PROPRIETARY ITEM	TOLERANCES UNLESS OTHERWISE NOTED	SIZE A3 / SYSTEM NX / DWG NO. J-R4-EM-9-1
EXCEPT FOR USES EXPRESSLY GRANTED IN WRITING, INFORMATION DISCLOSED HEREON IS CONFIDENTIAL AND ALL RIGHTS, PATENT AND OTHERWISE, ARE RESERVED BY SOUTHCO, INC.	ALL DIMENSIONS WITHOUT TOLERANCES ARE FOR REFERENCE ONLY.	DRAWN BY DJK/IGS / DATE 01OCT2013 / SCALE 1:1 / SHEET 2 OF 2
	PER ASME Y14.5M-1994	