REVISIONS			
REV.	DESCRIPTION	DATE	INIT
0	INITIAL RELEASE	2024/8/9	
1			

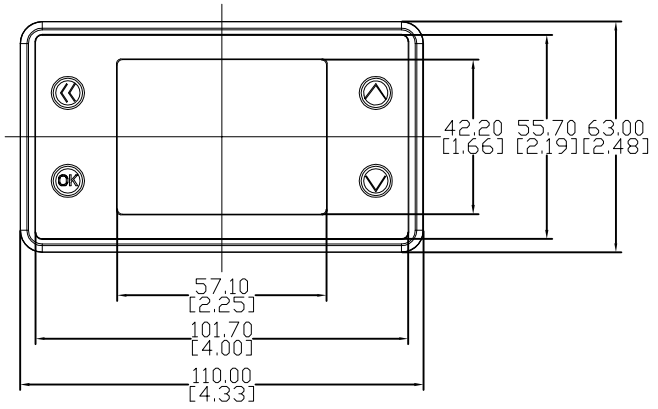

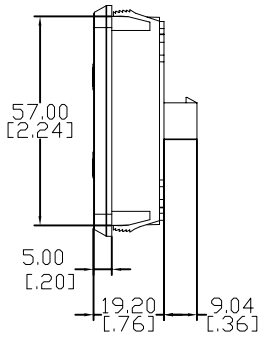

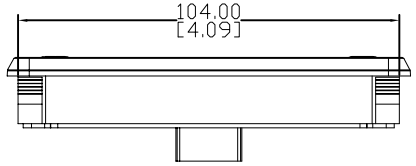

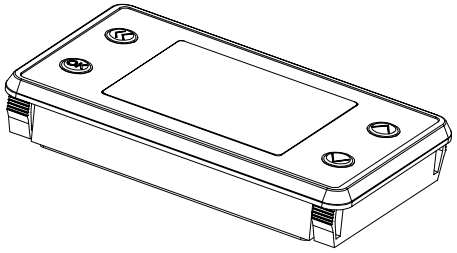

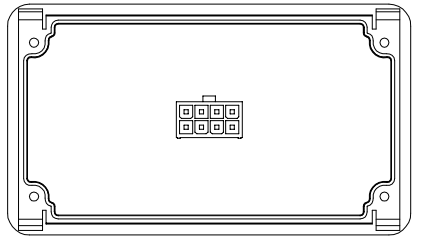

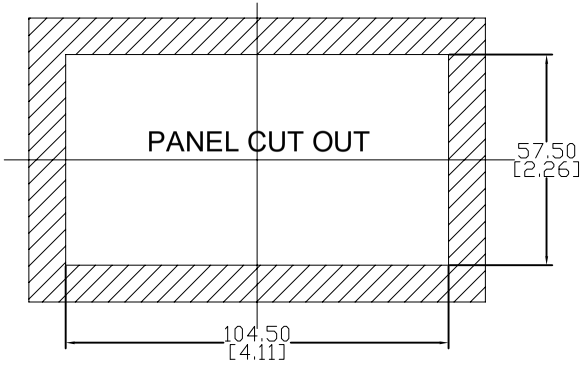

1.Display
- 2.8inches TFT color screen displays, full viewing angle
- Temperature range-20℃ - 70℃
- Resolution ratio240*RGB*320

2.Power voltage function
- Detect and display the current battery voltagebattery percentage and battery level value
- Battery capacity can be selected: setting range: 5-6000Ah
- 5 groups of voltage ranges to choose from12V /24V/36V/48V/72V
- 5 groups of battery types to choose from and 1 group of battery type can customize
- 2 types battery parameters can be set
  A Empty voltage value + full voltage value + charging voltage value
  B 10 groups of discharging parameters + 10 groups of charging parameters
- Charging and discharging delay can be set
  Charging delay setting range1-2000s
  Discharging delay setting range1-300s
- Battery voltage reminder function
  High voltage reminder can setsetting range(8)/8.5-120V
  Low voltage reminder can setsetting range8.5-120(120.5)V
  Low battery reminder can setsetting range1-60%

3.Current function
- Detect the current discharging current of the battery
- Current sensor can be set 50/60/70/80/90/100/200/300/400/500/600/700/800/900/1000/1200

4.Clock function
- Year setting range: 2000-2099Month setting range: 1-12 Day setting range: 1-31 Hour range:0-23 Minute range:0-59 Second range:0-59;

5.Bluetooth function
- Remote upgrade of product firmware ;
- Parameters are set via APP ;
- Synchronize working voltage, power, timing, maintenance and other information to the server
- Check working voltage, power, timing, maintenance and other information in real time
- Synchronize date clock

6.Communication function
- The product can communicate with the host to send and receive data
- Two frame type can choosestandard frame and extended frame
- Standard frame default ID0x201 Extended frame default ID0x18ff0b50
- Baud rate can be set10K /20K/50K/100K/125K/250K/500K/1000K

7.Log function: record battery charging and discharging parameters



1	Power input negative, connect to the battery negative
2	Current test input port
3	Key switch
4	Power input positive, connect to the battery positive
5	Voltage output
6	Communication port CANH
7	Communication port CANL
8	Current test output port

Item	Parameters
Operating Voltage	DC 10-100V
Housing material	PC545
Product size	110mm*63mm*28.2mm
Display window size	57.1mm*42.2mm
Working temperature	-20°C-70°C
Waterproof rate	IP67
Weight	133g

UNLESS OTHERWISE SPECIFIED DIMENSIONS ARE IN INCHES
TOLERANCES ARE:
.X± .1
.XX± .02
.XXX± .005
X°± 1°

COMPUTER GENRATED DRAWING-NO MANUAL CHANGES ALLOWED

DRAWN | DATE
CHECKED | DATE
APPROVEO | DATE
MATERIAL: N/A
FINISH: N/A
DO NOT SCALE DRAWING
PROJECTED VIEWS ARE 3RD ANGLE
STATUS: DS4_DESIGN

Runleader®
NINGBO JIANGBEI RUN LEADER ELECTRONICS CO., LT
WWW.RUN-LEADER.COM

TITLE: BATTERY METER
SIZE: .005 1
PART.NO.: BI036BT
SCALE: NTS
SHEET: 1 OF 1
PROJECT NO.: 334
REVISION: 0