HIGH SPEED Dual Indication Fuse-Links HSDI

Square Body DIN 43620 - 690V (IEC/UL), Size 000 to 00, 10 to 315 Amps



Standards/Approvals:
CE, designed and tested to IEC 60269: part 4. UL recognised (Survival Only), CSA

Description: Square body DIN 43620 blade style, dual indication High Speed fuses

Packaging: Size 000 are packed in 10's
Size 00 are packed in 6's

Technical Data:

Rated Voltage:	690 Vac
Amps:	10A to 315A
Rated Breaking Capacity:	200kA RMS Sym
RoHS Compliant:	Yes

Catalogue Symbol: 170M1558D to 170M1572D

Class of Operation: gR (10 to 63A), aR (80 to 315A)

Dimensional Data:

DIN 000 Type T
1mm = 0.0394" / 1" = 25.4mm

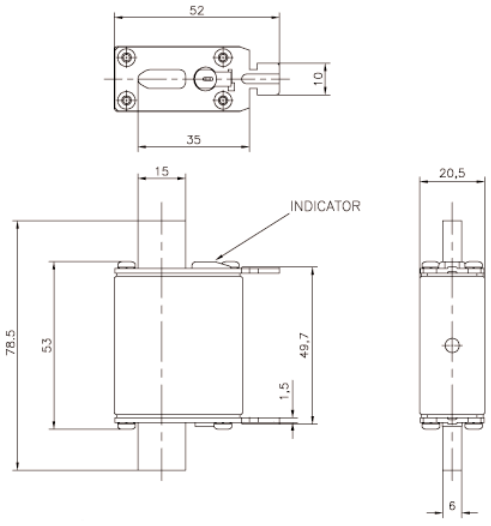

DIN 00 Type T
1mm = 0.0394" / 1" = 25.4mm

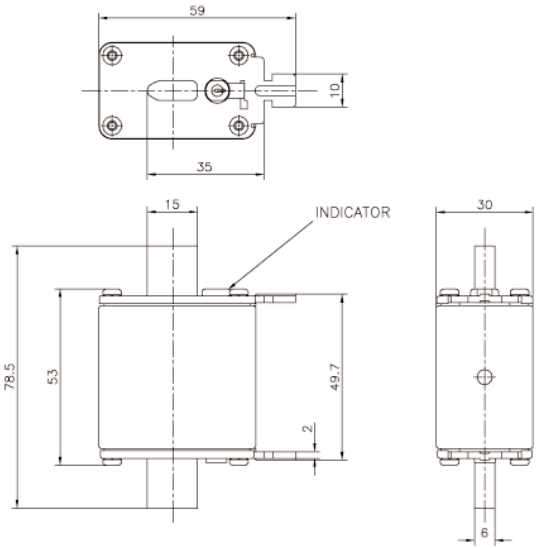

HIGH SPEED Dual Indication Fuse-Links HSDI

Square Body DIN 43620 - 690V (IEC/UL), 10 to 315 Amps

Catalogue Numbers:

Standard Approvals: CE, IEC 60269: part 4, UL recognised (Survival Only), CSA
Technical Data: 10, 16, 20, 25, 25, 32, 40, 50, 63, 80, 100, 125, 160, 200, 250, 315* Amps

Part Numbers	Size	Rated Current RMS Amps	I^2t (A^2sec)		Watts Loss
			Minimum Pre-Arcing	Clearing at 690V	
170M1558D	000	10	4	27	2.5
170M1559D	000	16	7	51	4
170M1560D	000	20	11.5	82.5	5
170M1561D	000	25	19	140	6
170M1562D	000	32	40	285	7
170M1563D	000	40	65	490	8.5
170M1564D	000	50	115	815	9.5
170M1565D	000	63	215	1550	11.5
170M1566D	000	80	380	2700	15
170M1567D	000	100	695	4950	16.5
170M1568D	000	125	1180	8250	21.5
170M1569D	000	160	2300	16500	25
170M1570D	000	200	4350	31000	29.5
170M1571D	000	250	7900	56000	35.5
170M1572D	00	315*	12000	84500	45

* 315A is only available in size DIN00

The rated current of this fuse range has been given with copper conductors that have a high current density of 1.3A/mm^2 (IEC 60269-4). For conductor cross section according to IEC 60269-1, the fuses with a rated current higher than 125A must be derated. Please contact Cooper Bussmann for application assistance.

HIGH SPEED Dual Indication Fuse-Links
Square Body DIN 43620 - 690V (IEC/UL), 10 to 315 Amps

Total Clearing I^2T

The total clearing I^2t at rated voltage and at power factor of 15% are given in the electrical characteristics. For other voltages, the clearing I^2t is found by multiplying by correction factor, K, given as a function of applied working voltage Eg (rms)

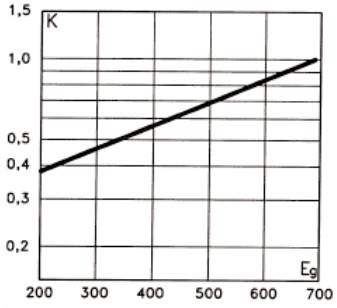

Arc Voltage

This curve gives the peak arc voltage, UL, which may appear accross the fuse during its operation as a function of the applied working voltage, Egrection factor, K, given as a function of applied working voltage Eg (rms) at a power factor of 15%

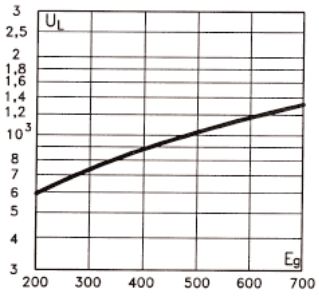

Power Losses

Watts loss at rated current is given in the electrical characteristics. The curve allows the calculation of the power losses at load currents lower than the rated current. The correction factor, Kp, is given as a function of the RMS load current, Ib, in % of the rated current.

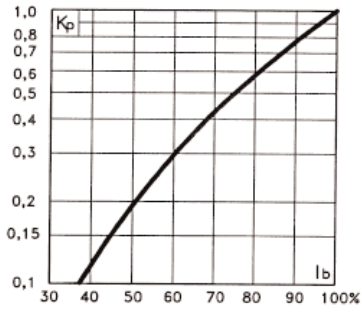

HIGH SPEED Dual Indication Fuse-Links
Square Body DIN 43620 - 690V (IEC/UL), 10 to 315 Amps

HSDI

Time Current Curves

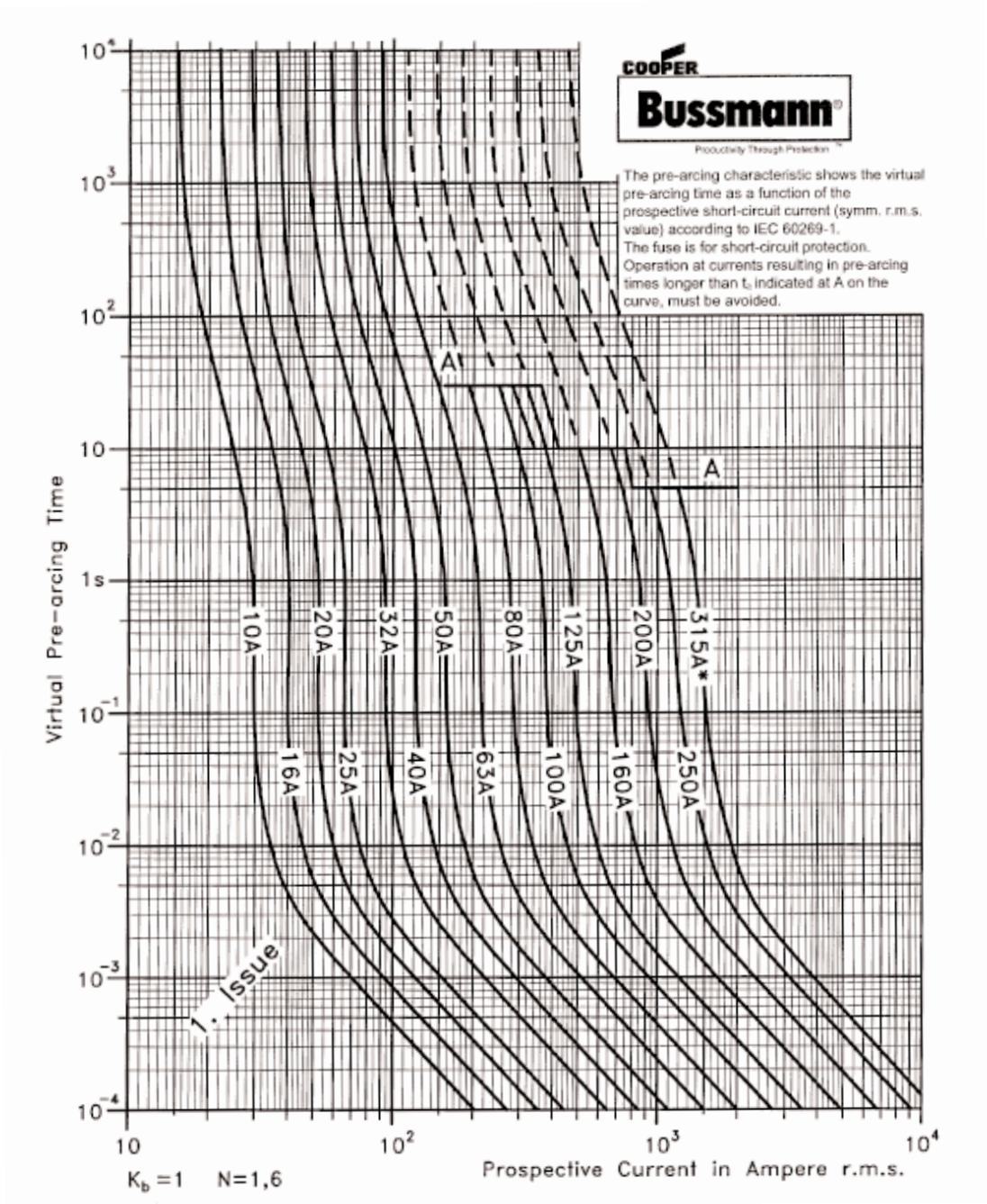

HIGH SPEED Dual Indication Fuse-Links
Square Body DIN 43620 - 690V (IEC/UL), 10 to 315 Amps

Peak Let-Through

