87045 LIMOGES Cedex
Telephone number: +33 5 55 06 87 87 – Fax: +33 5 55 06 88 88

DX³ RCBO 4500/6 kA
Phase + Neutral, neutral on left

Cat. N°(s): 4 107 02, 03, 04, 05, 06, 07, 08, 09, 22, 23, 24, 25, 26, 27, 28, 29, 34, 35, 36, 48, 52, 53, 54, 55, 56



CONTENTS PAGE

1. Description, use 1
2. Range 1
3. Overall dimensions..... 1
4. Preparation – Connection..... 1
5. General characteristics 3
6. Compliance and approvals..... 18
7. Curves 19
8. Auxiliaries and accessories 25
9. Safety 25

1. DESCRIPTION - USE

Residual Current Circuit Breaker with Overload (RCBO) with positive contact indication for control, protection against short-circuits and overloads, and isolation of electrical circuits, protecting people from direct and indirect contact and protecting installations from insulation faults.

Symbol:

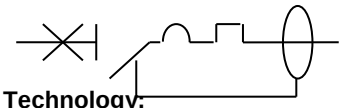

Technology:
. Limiting device
. The Neutral contact closes before and opens after the Phase contact
. The phase pole provides protection and isolation for the phase circuit
. The neutral pole provides isolation for the neutral circuit

2. RANGE

Polarity:
. 2 poles including 1 protected pole and 1 neutral pole

Width:
. 2 modules (2 x 17.8 mm)

Rated current In:
. 2 / 6 / 10 / 13 / 16 / 20 / 25 / 32 / 40 A, C curve
. 10 / 16 / 20 A, B curve

Magnetic tripping curve:
. C curve (between 5 In and 10 In)
. B curve (between 3 In and 5 In)

Type:
. AC (sinusoidal differential alternating current)
. F (additional immunity to unwanted tripping and detection of high frequency fault currents)
F products are also A type (sinusoidal differential alternating current with or without a DC component)

Sensitivity:
. 30 mA in AC type and F type
. 300 mA in AC type

2. RANGE *(continued)*

Rated voltage and frequency:
. 230 V~, 50 Hz with standard tolerances
. 240 V ~, 50 Hz with standard tolerances

Breaking capacity:
. Icn = 4500 A in accordance with standard EN/IEC 61009-1
. Icu = 6 kA in accordance with standard EN/IEC 60947-2

3. OVERALL DIMENSIONS

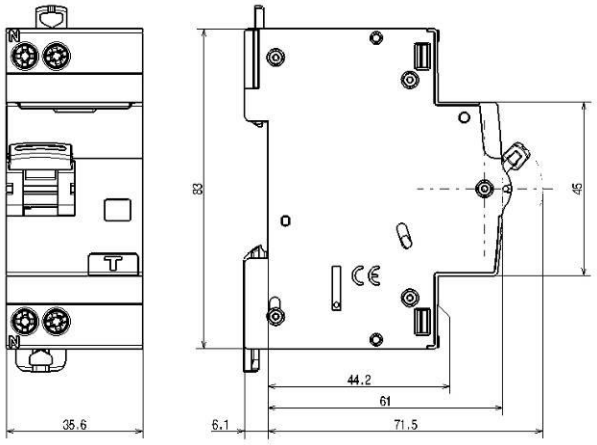

4. PREPARATION - CONNECTION

Mounting:
. On symmetrical rail EN 60715 or DIN 35 rail

Operating positions:
Vertical Horizontal Upside down On the side

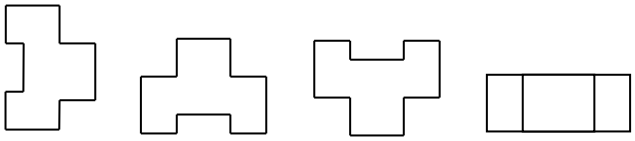

4. POSITIONING - CONNECTION *(continued)*

Power supply:
. Either from the top or the bottom

Module maintenance:
. A RCBO may be replaced in the middle of a row of supplied with busbars without disconnecting the other products.

Put the clamp in the unlocking position

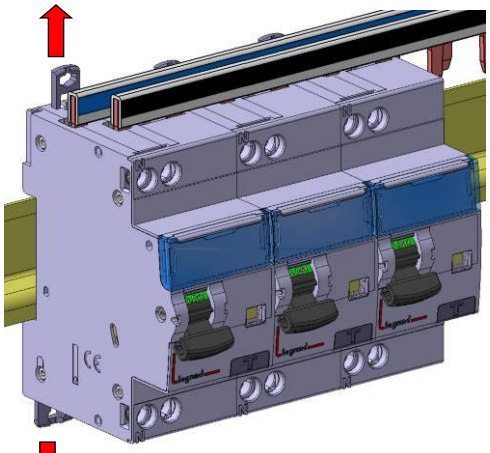

Put the clamp in the unlocking position

Unscrew both upper terminals completely

Pull the device forward in order to release it from the rail

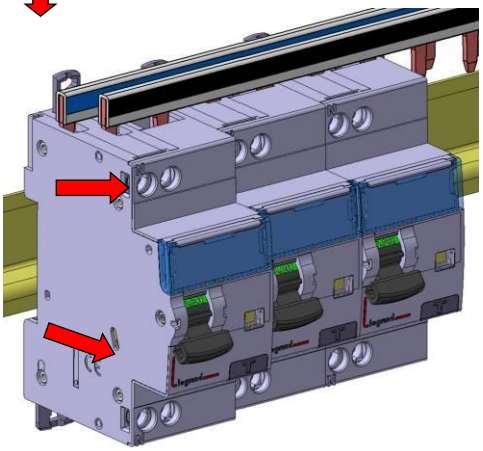

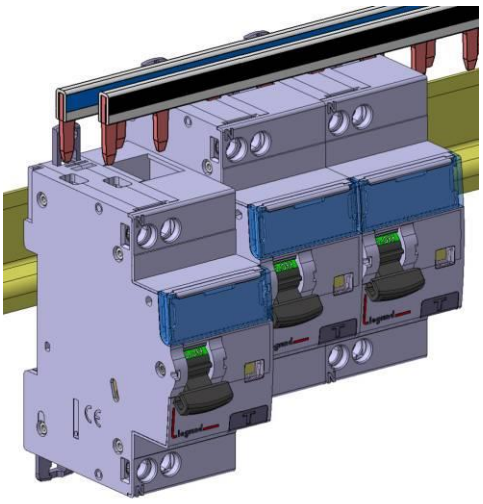

Pull the device downward in order to release it completely from the prongs of the busbar

4. POSITIONING - CONNECTION *(continued)*

Connection:
. Terminals protected against direct finger contact IP20 when wired device
. Cage terminals, with release and captive screws
. Terminals fitted with shutters preventing a cable being placed under the terminal, with the terminal partly open or closed
. Alignment and spacing of the terminals permitting connection with the other products in the range via prong supply busbars
. Terminal depth: 14 mm at the top and 13 mm at the bottom
. Screw head: mixed, slotted and Pozidriv no. 2
. Tightening torques:
- Recommended: 1.6 to 2 Nm
- Min.: 1.2 Nm
- Max.: 2.8 Nm

Conductor type:
. Copper cable at the top and bottom of the product
. Cable cross-section

	Without ferrule	With ferrule
Rigid cable	**1 x 0.75 mm² to 16 mm²** **2 x 0.75 mm² to 6 mm²**	**-**
Flexible cable	**1 x 0.75 mm² to 10 mm²** **2 x 0.75 mm² to 4 mm²**	**1 x 0.75 mm² to 10 mm²**

. Prong busbar, alone or with a 10 mm² flexible wire (without ferrule) or a connection terminal in the same terminal.

Recommended tools:
. For the terminals, screwdriver with 5.5 mm blade or Pozidriv no. 2 screwdriver
. For attaching or removing the DIN rail, screwdriver with 5.5 mm blade or Pozidriv no. 2 screwdriver

Manual actuation of the RCBO:
. Ergonomic 2-position handle
- "O-OFF" : device open
- "I-ON" : device closed

Contact status display:
. By marking of the handle
- "O-OFF" in white on a green background = contacts open
- "I-ON" in white on a red background = contacts closed

Trip indication on residual current fault:
. Yellow indicator on the front

Locking:
. Padlocks possible in the open and closed positions with padlock support (Cat. No. 4 063 03) and Ø 5 mm padlock (Cat. No. 4 063 13) or Ø 6 mm padlock (Cat. No. 0 227 97)
. Sealing possible in the open and closed positions

Labelling:
. Circuit identification by way of a label inserted in the label holder situated on the front of the product

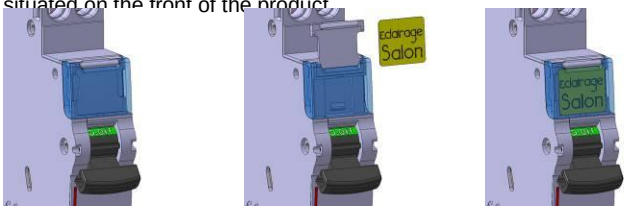

5. GENERAL CHARACTERISTICS

Neutral earthing system:
. IT,TT, TN

Marking on the front side:
. By permanent ink pad printing

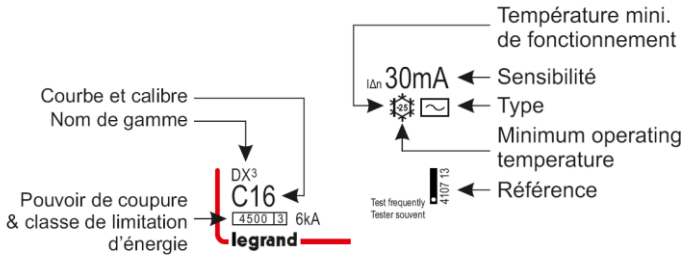

Marking on the upper panel:
. By permanent ink pad printing

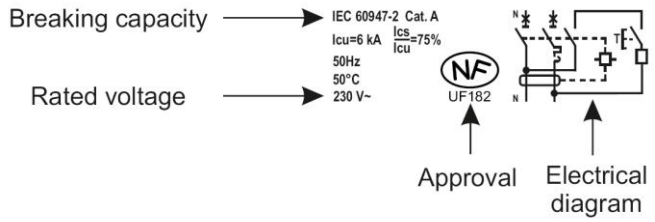

. The terminals upstream and downstream of the neutral pole are marked with an "N" moulded close to the screw heads.

Maximum operating voltage:
. U = 250 V

Minimum operating voltages (circuit Test):

IΔn	30 mA	300 mA
min. U	**180 V~**	**170 V~**

Breaking capacity:
. With a single-phase network (with alternating current 50 Hz)

Standard	Breaking capacity	Voltage between poles	Breaking capacity
EN/IEC 61009-1	Ics	230 V	**4.5 kA**
	Icn		**4.5 kA**
EN/IEC 60947-2	Icu	230 V	**6 kA**
	Ics		**75% Icu**

Breaking capacity on one single pole (phase pole):
. In accordance with I_{IT} EN60947-2 – Appendix H (double fault in IT system): 1.5 kA at 400 V~ and 3 kA at 230 V~
. In accordance with Icn1 EN60898-1: 4.5 kA at 230 V~

5. GENERAL CHARACTERISTICS *(continued)*

Residual breaking capacity:
. In accordance with standard EN/IEC 61009-1 section 9.12.11.4d (IΔm: short-circuit to earth) IΔm = 3 kA

Isolation distance:
. The distance between the contacts is greater than 5.5 mm with the handle in the open position.
. The RCBO is suitable for isolation in accordance with standard EN/IEC 61009-1.

Insulation voltage:
. Ui = 250 V in accordance with standard EN/IEC 61009-1

Degree of pollution:
. 2 in accordance with standard EN/IEC 61009-1.

Dielectric strength:
. 2,000 V

Rated impulse withstand voltage
. Uimp = 4 KV (wave 1.2/50 µs)

Protection from false tripping:
. 8/20 µs wave resistance:
  250 A for AC type
  3000 A for F type
. 0.5 µs/100 kHz damped recurring wave resistance:
  200 A for AC type and F type

Degree or class of protection:
. Terminals protected against direct contact, class of protection against solid objects and liquids (wired device): IP20 in accordance with standards IEC 529 / EN 60529 and NF 20-010
. Front side protected against direct contact: IP40
. Class II in relation to metallic conductive parts
. Class of protection against mechanical impacts IK02 in accordance with standard EN 62262.

Plastic materials:
. Polyamide and P.B.T.

Enclosure heat and fire resistance:
. Resistance to glow wire tests at 960°C, in accordance with standard EN/IEC 61009-1
. Classification V2, in accordance with standard UL94

Higher heating potential:
. The heat potential is assessed at: 2.1MJ

Closing and opening force via the handle:
. 4 N on opening
. 10 N on closing

Mechanical endurance:
. Compliant with standard EN/IEC 61009-1
. Tested with 20,000 operations with no load

Electrical endurance:
. Compliant with standard EN/IEC 61009-1
. Tested with 10,000 operations with load (at In x Cos (ρ 0.9)
. Tested with 2,000 residual current trip operations using the Test button or the fault current

5. GENERAL CHARACTERISTICS *(continued)*

Sinusoidal vibration resistance (in accordance with IEC 68.2.6):
. Axes: x – y – z
. Frequency: 10 to 55 Hz
. Acceleration: 3g (1g = 9.81 $m.s^{-2}$)

Resistance to tremors:
. In accordance with standard NF EN 61009-1

Ambient temperature:
. Operation:
. For the AC type from - 25°C to + 70°C
. For the F type from - 25°C to + 60°C
.Storage: from - 40°C to +70°C

DC operation:
. No

Frequency:
. Operation at 400Hz: No
. Operation at 60Hz: Yes

Packaged volume and quantity:

	Volume (dm^3)	Packaging
For all ratings	**0.4**	**Per 1**

Derating of RCBOs function of the number of devices placed side by side:
When several RCBOs are installed side by side and operate simultaneously, the heat dissipation of one pole is limited. This results in an increased operating temperature for RCBOs which may cause false tripping. Applying the following coefficients to the operating currents is recommended.

Number of RCBOs side by side	Coefficient
2 – 3	**0.9**
4 – 5	**0.8**
6 – 9	**0.7**
≥ 10	**0.6**

These values are provided by recommendation IEC 60439-1 and the standards NF C 63421 and EN 60439-1.
In order to avoid having to use these coefficients there must be good ventilation and the devices must be kept apart using the spacing elements Cat. No. 4 063 07 (0.5 module).

Derating of RCBOs in the event of use with fluorescent tubes:
Electronic or ferromagnetic ballasts provide a high inrush current for a very short time. These currents are liable to cause tripping of the RCBOs.

The maximum number of ballasts per RCBO stated by the lamp and ballast manufacturers in their catalogues should be taken into account during installation.

5. GENERAL CHARACTERISTICS *(continued)*

Impact of height:

	≤ 2000 m	3,000 m	4,000 m	5,000 m
Dielectric strength	**2,000 V**	**1,750 V**	**1,500 V**	**1,250 V**
Maximum operating voltage	**230 V**	**230 V**	**230 V**	**230 V**
Derating at 30°C	**none**	**none**	**none**	**none**

Product weight:

Catalogue Number	Description	Weight (kg)
4 107 02	C2 type AC 30 mA	**0,18**
4 107 03	C6 type AC 30 mA	**0,17**
4 107 04	C10 type AC 30 mA	**0,17**
4 107 05	C16 type AC 30 mA	**0,18**
4 107 06	C20 type AC 30 mA	**0,18**
4 107 07	C25 type AC 30 mA	**0,19**
4 107 08	C32 type AC 30 mA	**0,19**
4 107 09	C40 type AC 30 mA	**0,19**
4 107 22	C2 type AC 300 mA	**0,18**
4 107 23	C6 type AC 300 mA	**0,17**
4 107 24	C10type AC 300 mA	**0,17**
4 107 25	C16 type AC 300 mA	**0,17**
4 107 26	C20 type AC 300 mA	**0,18**
4 107 27	C25 type AC 300 mA	**0,18**
4 107 28	C32 type AC 300 mA	**0,18**
4 107 29	C40 type AC 300 mA	**0,18**
4 107 34	B10 type AC 300 mA	**0,17**
4 107 35	B16 type AC 300 mA	**0,17**
4 107 36	B20 type AC 300 mA	**0,18**
4 107 52	C10 type F 30 mA	**0,17**
4 107 48	C13 type F 30 mA	**0,17**
4 107 53	C16 type F 30 mA	**0,17**
4 107 54	C20 type F 30 mA	**0,17**
4 107 55	C25 type F 30 mA	**0,18**
4 107 56	C32 type F 30 mA	**0,19**

5. GENERAL CHARACTERISTICS *(continued)*

Dissipated power (W):

. C curve RCBOs in In/Un

RATED CURRENT	2A	6 A	10 A	13 A	16 A	20 A	25 A	32 A	40 A
Power (W) Phase pole	**2.45 W**	**2.5 W**	**2.1 W**	**2.3 W**	**3.3 W**	**4.3 W**	**4.3 W**	**5.3 W**	**7 W**
Power (W) Neutral pole	**0.03 W**	**0.3 W**	**0.8 W**	**1.25 W**	**1.9 W**	**2.6 W**	**3.8 W**	**3.4 W**	**5.4 W**

Derating of RCBOs depending on the ambient temperature:
. The nominal characteristics of a circuit breaker are modified depending on the ambient temperature which prevails in the cabinet or enclosure where the RCBO is located.
. Reference temperature: 30°C in accordance with standard EN/IEC 61009-1.

In (A)	- 25 °C	- 10 °C	0 °C	10 °C	20 °C	30 °C	40 °C	50 °C	60 °C	70 °C
2	**2.4**	**2.35**	**2.3**	**2.2**	**2.1**	**2**	**1.9**	**1.8**	**1.7**	**1.6**
6	**7.5**	**7.2**	**6.9**	**6.6**	**6.3**	**6**	**5.7**	**5.4**	**5.1**	**4.8**
10	**12.5**	**12**	**11.5**	**11**	**10.5**	**10**	**9.5**	**9**	**8.5**	**8**
13	**16.5**	**15.6**	**15**	**14.3**	**13.7**	**13**	**12.3**	**11.7**	**11**	**10.4**
16	**20**	**19.2**	**18.4**	**17.6**	**16.8**	**16**	**15.2**	**14.4**	**13.6**	**12.8**
20	**25**	**24**	**23**	**22**	**21**	**20**	**19**	**18**	**17**	**16**
25	**31**	**30**	**28.7**	**27.5**	**26.2**	**25**	**23.7**	**22.5**	**21.2**	**20**
32	**40**	**38**	**36.8**	**35.2**	**33.6**	**32**	**30.4**	**28.8**	**27.2**	**25.6**
40	**50**	**48**	**46**	**44**	**42**	**40**	**38**	**36**	**34**	**32**

Specific use: Appropriate to operate in humid atmosphere and polluted by a chlorined environment (pool-type)

Association and coordination of an RCBO with a protective device located upstream:
This association allows a device's breaking capacity to be increased by combining it with another protective device placed upstream.
This combination makes it possible to use a downstream device with a breaking capacity which is lower than the maximum prospective short-circuit current at its installation point.

Association and coordination with upstream fuses:
. Three-phase network (+N) 230/400 V or 240/415 V in accordance with standard EN/IEC 60947-2
. TT neutral earthing or TNS system

		Upstream fuse - gG and aM types									
Downstream RCBO Ph+N		≤ 20 A	25 A	32 A	40 A	50 A	63 A	80 A	100 A	125 A	160 A
DX³ 4500/6 kA C and B curve	≤ 6 A	**50 kA**	**50 kA**	**50 kA**	**50 kA**	**50 kA**	**25 kA**	**25 kA**	**25 kA**	**25 kA**	**25 kA**
	10 A	**50 kA**	**50 kA**	**50 kA**	**50 kA**	**50 kA**	**25 kA**	**25 kA**	**25 kA**	**25 kA**	**25 kA**
	13 A	**50 kA**	**50 kA**	**50 kA**	**50 kA**	**50 kA**	**25 kA**	**25 kA**	**25 kA**	**25 kA**	**25 kA**
	16 A	**50 kA**	**50 kA**	**50 kA**	**50 kA**	**50 kA**	**25 kA**	**25 kA**	**25 kA**	**25 kA**	**25 kA**
	20 A	**-**	**50 kA**	**50 kA**	**50 kA**	**50 kA**	**25 kA**	**25 kA**	**25 kA**	**25 kA**	**25 kA**
	25 A	**-**	**-**	**50 kA**	**50 kA**	**50 kA**	**25 kA**	**25 kA**	**25 kA**	**25 kA**	**16 kA**
	32 A	**-**	**-**	**-**	**50 kA**	**50 kA**	**25 kA**	**25 kA**	**25 kA**	**25 kA**	**16 kA**
	40 A	**-**	**-**	**-**	**-**	**50 kA**	**25 kA**	**25 kA**	**25 kA**	**25 kA**	**16 kA**

5. GENERAL CHARACTERISTICS *(continued)*

Association and coordination with upstream MCBs:
. Three-phase network (+N) 230/400 V or 240/415 V in accordance with standard EN/IEC 60947-2
. TT neutral earthing or TNS system

		Upstream MCB								
		DX³ P+N 1 module					DX³ 6000/10 kA B, C and D curves			
		DX³ 6000/10 kA B and C curves				DX³ 10000/16 kA C curve				
Downstream RCBO Ph+N		≤ 20 A	25 A	32 A	40 A	≤ 20 A	≤ 32 A	40 A	50 A	63 A
DX³ 4500/6 kA C and B curve	≤ 6 A	**10 kA**	**10 kA**	**10 kA**	**10 kA**	**16 kA**	**25 kA**	**25 kA**	**25 kA**	**25 kA**
	10 A	**10 kA**	**10 kA**	**10 kA**	**10 kA**	**16 kA**	**25 kA**	**25 kA**	**25 kA**	**25 kA**
	13 A	**10 kA**	**10 kA**	**10 kA**	**10 kA**	**16 kA**	**25 kA**	**25 kA**	**25 kA**	**25 kA**
	16 A	**10 kA**	**10 kA**	**10 kA**	**10 kA**	**16 kA**	**25 kA**	**25 kA**	**25 kA**	**25 kA**
	20 A	**-**	**10 kA**	**10 kA**	**10 kA**	**-**	**25 kA**	**25 kA**	**25 kA**	**25 kA**
	25 A	**-**	**-**	**10 kA**	**10 kA**	**-**	**25 kA**	**25 kA**	**25 kA**	**25 kA**
	32 A	**-**	**-**	**-**	**10 kA**	**-**	**-**	**25 kA**	**25 kA**	**25 kA**
	40 A	**-**	**-**	**-**	**-**		**-**	**-**	**25 kA**	**25 kA**

		Upstream MCB							
		DX³ 10000/16 kA B, C and D curves							
Downstream RCBO Ph+N		≤ 25 A	32 A	40 A	50 A	63 A	80 A	100 A	125 A
DX³ 4500/6 kA C and B curve	≤ 6 A	**32 kA**	**32 kA**	**25 kA**	**25 kA**	**25 kA**	**25 kA**	**25 kA**	**25 kA**
	10 A	**32 kA**	**32 kA**	**25 kA**	**25 kA**	**25 kA**	**25 kA**	**25 kA**	**25 kA**
	13 A	**32 kA**	**32 kA**	**25 kA**	**25 kA**	**25 kA**	**25 kA**	**25 kA**	**25 kA**
	16 A	**32 kA**	**32 kA**	**25 kA**	**25 kA**	**25 kA**	**25 kA**	**25 kA**	**25 kA**
	20 A	**32 kA**	**32 kA**	**25 kA**	**25 kA**	**25 kA**	**25 kA**	**25 kA**	**25 kA**
	25 A	**-**	**32 kA**	**25 kA**	**25 kA**	**25 kA**	**25 kA**	**25 kA**	**25 kA**
	32 A	**-**	**-**	**25 kA**	**25 kA**	**25 kA**	**25 kA**	**25 kA**	**25 kA**
	40 A	**-**	**-**	**-**	**25 kA**	**25 kA**	**25 kA**	**25 kA**	**25 kA**

5. GENERAL CHARACTERISTICS *(continued)*

Association and coordination with upstream MCBs:
. Three-phase network (+N) 230/400 V or 240/415 V in accordance with standard EN/IEC 60947-2
. TT neutral earthing or TNS system

		Upstream MCB							
		DX³ 25 kA B, C and D curves							
Downstream RCBO Ph+N		≤ 25 A	32 A	40 A	50 A	63 A	80 A	100 A	125 A
DX³ 4500/6 kA C and B curve	≤ 6 A	**50 kA**	**50 kA**	**25 kA**	**25 kA**	**25 kA**	**25 kA**	**25 kA**	**25 kA**
	10 A	**50 kA**	**50 kA**	**25 kA**	**25 kA**	**25 kA**	**25 kA**	**25 kA**	**25 kA**
	13 A	**50 kA**	**50 kA**	**25 kA**	**25 kA**	**25 kA**	**25 kA**	**25 kA**	**25 kA**
	16 A	**50 kA**	**50 kA**	**25 kA**	**25 kA**	**25 kA**	**25 kA**	**25 kA**	**25 kA**
	20 A	**50 kA**	**50 kA**	**25 kA**	**25 kA**	**25 kA**	**25 kA**	**25 kA**	**25 kA**
	25 A	**-**	**50 kA**	**25 kA**	**25 kA**	**25 kA**	**25 kA**	**25 kA**	**25 kA**
	32 A	**-**	**-**	**25 kA**	**25 kA**	**25 kA**	**25 kA**	**25 kA**	**25 kA**
	40 A	**-**	**-**	**-**	**25 kA**	**25 kA**	**25 kA**	**25 kA**	**25 kA**

		Upstream MCB					
		DX³ 36 kA C curve					
Downstream RCBO Ph+N		≤ 25 A	32 A	40 A	50 A	63 A	80 A
DX³ 4500/6 kA C and B curve	≤ 6 A	**50 kA**	**50 kA**	**25 kA**	**25 kA**	**25 kA**	**25 kA**
	10 A	**50 kA**	**50 kA**	**25 kA**	**25 kA**	**25 kA**	**25 kA**
	13 A	**50 kA**	**50 kA**	**25 kA**	**25 kA**	**25 kA**	**25 kA**
	16 A	**50 kA**	**50 kA**	**25 kA**	**25 kA**	**25 kA**	**25 kA**
	20 A	**50 kA**	**50 kA**	**25 kA**	**25 kA**	**25 kA**	**25 kA**
	25 A	**-**	**50 kA**	**25 kA**	**25 kA**	**25 kA**	**25 kA**
	32 A	**-**	**-**	**25 kA**	**25 kA**	**25 kA**	**25 kA**
	40 A	**-**	**-**	**-**	**25 kA**	**25 kA**	**25 kA**

5. GENERAL CHARACTERISTICS *(continued)*

Association and coordination with upstream MCBs:
. Three-phase network (+N) 230/400 V or 240/415 V in accordance with standard EN/IEC 60947-2
. TT neutral earthing or TNS system

		Upstream MCB				
		DX³ 50 kA B, C and D curves				
Downstream RCBO Ph+N		≤ 25 A	32 A	40 A	50 A	63 A
DX³ 4500/6 kA C and B curve	≤ 6 A	**50 kA**	**50 kA**	**25 kA**	**25 kA**	**25 kA**
	10 A	**50 kA**	**50 kA**	**25 kA**	**25 kA**	**25 kA**
	13 A	**50 kA**	**50 kA**	**25 kA**	**25 kA**	**25 kA**
	16 A	**50 kA**	**50 kA**	**25 kA**	**25 kA**	**25 kA**
	20 A	**50 kA**	**50 kA**	**25 kA**	**25 kA**	**25 kA**
	25 A	**-**	**50 kA**	**25 kA**	**25 kA**	**25 kA**
	32 A	**-**	**-**	**25 kA**	**25 kA**	**25 kA**
	40 A	**-**	**-**	**-**	**25 kA**	**25 kA**

Association and coordination with upstream Moulded Case Circuit Breakers (MCCBs):
. Three-phase network (+N) 230/400 V or 240/415 V in accordance with standard EN/IEC 60947-2
. TT neutral earthing or TNS system

		Upstream MCCB							
		DPX³ 160 16 kA							
Downstream RCBO Ph+N		16 A	25 A	40 A	63 A	80 A	100 A	125 A	160 A
DX³ 4500/6 kA C and B curve	≤ 6 A	**22 kA**	**22 kA**	**22 kA**	**22 kA**	**22 kA**	**22 kA**	**22 kA**	**22 kA**
	10 A	**22 kA**	**22 kA**	**22 kA**	**22 kA**	**22 kA**	**22 kA**	**22 kA**	**22 kA**
	13 A	**22 kA**	**22 kA**	**22 kA**	**22 kA**	**22 kA**	**22 kA**	**22 kA**	**22 kA**
	16 A	**-**	**22 kA**	**22 kA**	**22 kA**	**22 kA**	**22 kA**	**22 kA**	**22 kA**
	20 A	**-**	**22 kA**	**22 kA**	**22 kA**	**22 kA**	**22 kA**	**22 kA**	**22 kA**
	25 A	**-**	**-**	**22 kA**	**22 kA**	**22 kA**	**22 kA**	**22 kA**	**22 kA**
	32 A	**-**	**-**	**16 kA**	**16 kA**	**16 kA**	**16 kA**	**16 kA**	**16 kA**
	40 A	**-**	**-**	**-**	**16 kA**	**16 kA**	**16 kA**	**16 kA**	**16 kA**

5. GENERAL CHARACTERISTICS *(continued)*

Association and coordination with upstream Moulded Case Circuit Breakers (MCCBs):
. Three-phase network (+N) 230/400 V or 240/415 V in accordance with standard EN/IEC 60947-2
. TT neutral earthing or TNS system

		Upstream MCCB							
		DPX³ 160 25 kA, 36 kA and 50 kA							
Downstream RCBO Ph+N		16 A	25 A	40 A	63 A	80 A	100 A	125 A	160 A
DX³ 4500/6 kA C and B curve	≤ 6 A	**30 kA**	**30 kA**	**30 kA**	**30 kA**	**30 kA**	**30 kA**	**30 kA**	**30 kA**
	10 A	**30 kA**	**30 kA**	**30 kA**	**30 kA**	**30 kA**	**30 kA**	**30 kA**	**30 kA**
	13 A	**30 kA**	**30 kA**	**30 kA**	**30 kA**	**30 kA**	**30 kA**	**30 kA**	**30 kA**
	16 A	-	**30 kA**	**30 kA**	**30 kA**	**30 kA**	**30 kA**	**30 kA**	**30 kA**
	20 A	-	**30 kA**	**30 kA**	**30 kA**	**30 kA**	**30 kA**	**30 kA**	**30 kA**
	25 A	-	-	**25 kA**	**25 kA**	**25 kA**	**25 kA**	**25 kA**	**25 kA**
	32 A	-	-	**16 kA**	**16 kA**	**16 kA**	**16 kA**	**16 kA**	**16 kA**
	40 A	-	-	-	**16 kA**	**16 kA**	**16 kA**	**16 kA**	**16 kA**

		Upstream MCCB						
		DPX 250 ER ≤ 50 kA			DPX 250 ER AB 36 kA			
Downstream RCBO Ph+N		100 A	160 A	250 A	90 A	130 A	170 A	240 A
DX³ 4500/6 kA C and B curve	≤ 6 A	**30 kA**	**30 kA**	**30 kA**	**30 kA**	**30 kA**	**30 kA**	**30 kA**
	10 A	**30 kA**	**30 kA**	**30 kA**	**30 kA**	**30 kA**	**30 kA**	**30 kA**
	13 A	**30 kA**	**30 kA**	**30 kA**	**30 kA**	**30 kA**	**30 kA**	**30 kA**
	16 A	**25 kA**	**25 kA**	**25 kA**	**25 kA**	**25 kA**	**25 kA**	**25 kA**
	20 A	**25 kA**	**25 kA**	**25 kA**	**25 kA**	**25 kA**	**25 kA**	**25 kA**
	25 A	**20 kA**	**20 kA**	**20 kA**	**20 kA**	**20 kA**	**20 kA**	**20 kA**
	32 A	**10 kA**	**10 kA**	**10 kA**	**10 kA**	**10 kA**	**10 kA**	**10 kA**
	40 A	**10 kA**	**10 kA**	**10 kA**	**10 kA**	**10 kA**	**10 kA**	**10 kA**

5. GENERAL CHARACTERISTICS *(continued)*

Association and coordination with upstream Moulded Case Circuit Breakers (MCCBs):
. Three-phase network (+N) 230/400 V or 240/415 V in accordance with standard EN/IEC 60947-2
. TT neutral earthing or TNS system

		Upstream MCCB							
		DPX³ 250 ≤ 70 kA thermal-magnetic				DPX³ 250 ≤ 70 kA electronic			
Downstream RCBO Ph+N		100 A	160 A	200 A	250 A	40 A	100 A	160 A	250 A
DX³ 4500/6 kA C and B curve	≤ 6 A	**30 kA**	**30 kA**	**30 kA**	**30 kA**	**30 kA**	**30 kA**	**30 kA**	**30 kA**
	10 A	**30 kA**	**30 kA**	**30 kA**	**30 kA**	**30 kA**	**30 kA**	**30 kA**	**30 kA**
	13 A	**30 kA**	**30 kA**	**30 kA**	**30 kA**	**30 kA**	**30 kA**	**30 kA**	**30 kA**
	16 A	**30 kA**	**30 kA**	**30 kA**	**30 kA**	**30 kA**	**30 kA**	**30 kA**	**30 kA**
	20 A	**30 kA**	**30 kA**	**30 kA**	**30 kA**	**30 kA**	**30 kA**	**30 kA**	**30 kA**
	25 A	**25 kA**	**25 kA**	**25 kA**	**25 kA**	**25 kA**	**25 kA**	**25 kA**	**25 kA**
	32 A	**16 kA**	**16 kA**	**16 kA**	**16 kA**	**16 kA**	**16 kA**	**16 kA**	**16 kA**
	40 A	**16 kA**	**16 kA**	**16 kA**	**16 kA**	-	**16 kA**	**16 kA**	**16 kA**

		Upstream MCCB									
		DPX 250 36 kA / DPX -H 250 70 kA / DPX -L 250,100 kA thermal-magnetic						DPX 250 36 kA / DPX -H 250 70 kA / DPX -L 250,100 kA electronic			
Downstream RCBO Ph+N		25 A	40 A	63 A	100 A	160 A	250 A	40 A	100 A	160 A	250 A
DX³ 4500/6 kA C and B curve	≤ 6 A	**30 kA**	**30 kA**	**30 kA**	**30 kA**	**30 kA**	**30 kA**	**30 kA**	**30 kA**	**30 kA**	**30 kA**
	10 A	**30 kA**	**30 kA**	**30 kA**	**30 kA**	**30 kA**	**30 kA**	**30 kA**	**30 kA**	**30 kA**	**30 kA**
	13 A	**30 kA**	**30 kA**	**30 kA**	**30 kA**	**30 kA**	**30 kA**	**30 kA**	**30 kA**	**30 kA**	**30 kA**
	16 A	**30 kA**	**30 kA**	**30 kA**	**30 kA**	**30 kA**	**30 kA**	**30 kA**	**30 kA**	**30 kA**	**30 kA**
	20 A	**30 kA**	**30 kA**	**30 kA**	**30 kA**	**30 kA**	**30 kA**	**30 kA**	**30 kA**	**30 kA**	**30 kA**
	25 A	-	**25 kA**	**25 kA**	**25 kA**	**25 kA**	**25 kA**	**25 kA**	**25 kA**	**25 kA**	**25 kA**
	32 A	-	**16 kA**	**16 kA**	**16 kA**	**16 kA**	**16 kA**	**16 kA**	**16 kA**	**16 kA**	**16 kA**
	40 A	-	-	**16 kA**	**16 kA**	**16 kA**	**16 kA**	-	**16 kA**	**16 kA**	**16 kA**

5. GENERAL CHARACTERISTICS *(continued)*

Association and coordination with upstream Moulded Case Circuit Breakers (MCCBs):
. Three-phase network (+N) 230/400 V or 240/415 V in accordance with standard EN/IEC 60947-2
. TT neutral earthing or TNS system

		Upstream MCCB	
		DPX 400 AB 36 kA	
Downstream RCBO Ph+N		320 A	400 A
DX³ 4500/6 kA C and B curve	≤ 6 A	**25 kA**	**25 kA**
	10 A	**25 kA**	**25 kA**
	13 A	**25 kA**	**25 kA**
	16 A	**25 kA**	**25 kA**
	20 A	**25 kA**	**25 kA**
	25 A	**25 kA**	**25 kA**
	32 A	**16 kA**	**16 kA**
	40 A	**16 kA**	**16 kA**

		Upstream MCCB								
		DPX 630 36 kA / DPX -H 630 70 kA / DPX -L 630 100 kA thermal-magnetic					DPX 630 36 kA / DPX -H 630 70 kA / DPX -L 630 100 kA electronic			
Downstream RCBO Ph+N		250 A	320 A	400 A	500 A	630 A	160 A	250 A	400 A	630 A
DX³ 4500/6 kA C and B curve	≤ 6 A	**25 kA**	**25 kA**	**25 kA**	**25 kA**	**25 kA**	**25 kA**	**25 kA**	**25 kA**	**25 kA**
	10 A	**25 kA**	**25 kA**	**25 kA**	**25 kA**	**25 kA**	**25 kA**	**25 kA**	**25 kA**	**25 kA**
	13 A	**25 kA**	**25 kA**	**25 kA**	**25 kA**	**25 kA**	**25 kA**	**25 kA**	**25 kA**	**25 kA**
	16 A	**25 kA**	**25 kA**	**25 kA**	**25 kA**	**25 kA**	**25 kA**	**25 kA**	**25 kA**	**25 kA**
	20 A	**25 kA**	**25 kA**	**25 kA**	**25 kA**	**25 kA**	**25 kA**	**25 kA**	**25 kA**	**25 kA**
	25 A	**25 kA**	**25 kA**	**25 kA**	**25 kA**	**25 kA**	**25 kA**	**25 kA**	**25 kA**	**25 kA**
	32 A	**16 kA**	**16 kA**	**16 kA**	**16 kA**	**16 kA**	**16 kA**	**16 kA**	**16 kA**	**16 kA**
	40 A	**16 kA**	**16 kA**	**16 kA**	**16 kA**	**16 kA**	**16 kA**	**16 kA**	**16 kA**	**16 kA**

5. GENERAL CHARACTERISTICS *(continued)*

Association and coordination with upstream Moulded Case Circuit Breakers (MCCBs):
. Three-phase network (+N) 230/400 V or 240/415 V in accordance with standard EN/IEC 60947-2
. TT neutral earthing or TNS system

		Upstream MCCB	
		DPX 1250 50 kA / DPX –H 1250 70 kA / DPX -L 1250 100 kA	DPX 1600 36 kA / DPX -H 1600 70 kA electronic
Downstream RCBO Ph+N		500 A to 1,250 A	630 A to 1,600 A
DX³ 4500/6 kA C and B curve	≤ 6 A	**25 kA**	**25 kA**
	10 A	**25 kA**	**25 kA**
	13 A	**25 kA**	**25 kA**
	16 A	**25 kA**	**25 kA**
	20 A	**25 kA**	**25 kA**
	25 A	**25 kA**	**25 kA**
	32 A	**10 kA**	**10 kA**
	40 A	**10 kA**	**10 kA**

Selectivity between two levels of protection
. The downstream RCBO must always have a magnetic threshold and a rated current lower than those of the upstream protection.
. Selectivity or Discrimination is said to be total (T) if there is discrimination up to the value of breaking capacity (in accordance standard with EN/IEC 60947-2) of the downstream RCBO.

Discrimination with upstream fuses:
. Discrimination limit with a voltage of 230 V ~ (Values in A)

		Upstream fuse cartridge							
		gG cartridge							
Downstream RCBO Ph+N		32 A	40 A	50 A	63 A	80 A	100 A	125 A	160 A
DX³ 4500/6 kA C and B curve	≤ 6 A	**1300**	**1900**	**2500**	**4000**	**4600**	**T**	**T**	**T**
	10 A	**-**	**1600**	**2200**	**3200**	**3600**	**T**	**T**	**T**
	13 A	**-**	**1400**	**1800**	**2600**	**3000**	**T**	**T**	**T**
	16 A	**-**	**1400**	**1800**	**2600**	**3000**	**5600**	**T**	**T**
	20 A	**-**	**1200**	**1500**	**2200**	**2500**	**4600**	**T**	**T**
	25 A	**-**	**-**	**1300**	**2000**	**2200**	**4100**	**5500**	**T**
	32 A	**-**	**-**	**1200**	**1700**	**1900**	**3500**	**4500**	**T**
	40 A	**-**	**-**	**-**	**-**	**1700**	**3000**	**4000**	**T**

. T = Total discrimination

5. GENERAL CHARACTERISTICS *(continued)*

Discrimination with upstream fuses:
. Discrimination limit with a voltage of 230 V ~ (Values in A)

		Upstream fuse cartridge								
		aM cartridge								
Downstream RCBO Ph+N		25 A	32 A	40 A	50 A	63 A	80 A	100 A	125 A	160 A
DX³ 4500/6 kA C and B curve	≤ 6 A	**1000**	**1600**	**2100**	**3200**	**T**	**T**	**T**	**T**	**T**
	10 A	**-**	**1100**	**1700**	**2500**	**5000**	**T**	**T**	**T**	**T**
	13 A	**-**	**1000**	**1400**	**2100**	**4000**	**T**	**T**	**T**	**T**
	16 A	**-**	**1000**	**1400**	**2100**	**4000**	**T**	**T**	**T**	**T**
	20 A	**-**	**-**	**1300**	**1800**	**3400**	**5100**	**T**	**T**	**T**
	25 A	**-**	**-**	**1100**	**1600**	**3000**	**4500**	**T**	**T**	**T**
	32 A	**-**	**-**	**-**	**1300**	**2400**	**3800**	**5000**	**T**	**T**
	40 A	**-**	**-**	**-**	**-**	**2100**	**3100**	**4200**	**T**	**T**

Discrimination with upstream modular MCBs:
. Discrimination limit with a voltage of 230 V ~ (Values in A)

		Upstream MCB											
		DX³ 4500/6 kA - DX³ 6000/10 kA - DX³ 10000/16 kA B curve											
Downstream RCBO Ph+N		10 A	13 A	16 A	20 A	25 A	32 A	40 A	50 A	63 A	80 A	100 A	125 A
DX³ 4500/6 kA C and B curve	≤ 6 A	**-**	**52**	**64**	**80**	**100**	**128**	**160**	**200**	**252**	**4000**	**T**	**T**
	10 A	**-**	**-**	**-**	**80**	**100**	**128**	**160**	**200**	**252**	**3000**	**5000**	**T**
	13 A	**-**	**-**	**-**	**-**	**100**	**128**	**160**	**200**	**252**	**2500**	**4000**	**6000**
	16 A	**-**	**-**	**-**	**-**	**-**	**128**	**160**	**200**	**252**	**2000**	**3600**	**5500**
	20 A	**-**	**-**	**-**	**-**	**-**	**-**	**160**	**200**	**252**	**1600**	**3000**	**4000**
	25 A	**-**	**-**	**-**	**-**	**-**	**-**	**-**	**200**	**252**	**1300**	**2400**	**3300**
	32 A	**-**	**-**	**-**	**-**	**-**	**-**	**-**	**-**	**252**	**1000**	**1800**	**2700**
	40 A	**-**	**-**	**-**	**-**	**-**	**-**	**-**	**-**	**-**	**800**	**1600**	**2400**

. T = Total discrimination

5. GENERAL CHARACTERISTICS *(continued)*

Discrimination with upstream modular MCBs:
Discrimination limit with a voltage of 230 V ~ (Values in A)

		Upstream MCB											
		DX³ 3000 - DX³ 4500/4.5 kA - DX³ 4500/6 kA - DX³ 6000/10 kA - DX³ 10000/16 kA C curve											
Downstream RCBO Ph+N		10 A	13 A	16 A	20 A	25 A	32 A	40 A	50 A	63 A	80 A	100 A	125 A
DX³ 4500/6 kA C and B curve	≤ 6 A	**75**	**98**	**120**	**150**	**187**	**240**	**300**	**375**	**472**	**4000***	**T***	**T***
	10 A	**-**	**98**	**120**	**150**	**187**	**240**	**300**	**375**	**472**	**3000**	**5000***	**T***
	13 A	**-**	**-**	**120**	**150**	**187**	**240**	**300**	**375**	**472**	**2500**	**4000***	**6000***
	16 A	**-**	**-**	**-**	**150**	**187**	**240**	**300**	**375**	**472**	**2000**	**3600***	**5500***
	20 A	**-**	**-**	**-**	**-**	**187**	**240**	**300**	**375**	**472**	**1600**	**3000**	**4000***
	25 A	**-**	**-**	**-**	**-**	**-**	**240**	**300**	**375**	**472**	**1300**	**2400**	**3300***
	32 A	**-**	**-**	**-**	**-**	**-**	**-**	**300**	**375**	**472**	**1000**	**1800**	**2700**
	40 A	**-**	**-**	**-**	**-**	**-**	**-**	**-**	**375**	**472**	**800**	**1600**	**2400**

		Upstream MCB											
		DX³ 4500/6 kA - DX³ 6000A - DX³ 6000/10 kA - DX³ 10000/16 kA D curve											
Downstream RCBO Ph+N		10 A	13 A	16 A	20 A	25 A	32 A	40 A	50 A	63 A	80 A	100 A	125 A
DX³ 4500/6 kA C and B curve	≤ 6 A	**120**	**156**	**192**	**240**	**300**	**384**	**480**	**600**	**756**	**4000**	**T**	**T**
	10 A	**-**	**-**	**192**	**240**	**300**	**384**	**480**	**600**	**756**	**3000**	**5000**	**T**
	13 A	**-**	**-**	**-**	**240**	**300**	**384**	**480**	**600**	**756**	**2500**	**4000**	**6000**
	16 A	**-**	**-**	**-**	**240**	**300**	**384**	**480**	**600**	**756**	**2000**	**3600**	**5500**
	20 A	**-**	**-**	**-**	**-**	**300**	**384**	**480**	**600**	**756**	**1600**	**3000**	**4000**
	25 A	**-**	**-**	**-**	**-**	**-**	**384**	**480**	**600**	**756**	**1300**	**2400**	**3300**
	32 A	**-**	**-**	**-**	**-**	**-**	**-**	**480**	**600**	**756**	**1100**	**1450**	**2700**
	40 A	**-**	**-**	**-**	**-**	**-**	**-**	**-**	**600**	**756**	**1000**	**1250**	**2400**

. T = Total discrimination

. *: If the discrimination value stated in the table is greater than the breaking capacity of the upstream RCBO then the breaking capacity of the upstream device must be taken as the discrimination value (the discrimination value may not exceed the breaking capacity of the upstream device).

5. GENERAL CHARACTERISTICS *(continued)*

Discrimination with upstream modular MCBs:
. Discrimination limit with a voltage of 230 V ~ (Values in A)

		Upstream MCB										
		DX³ 25 kA B curve										
Downstream RCBO Ph+N		10 A	16 A	20 A	25 A	32 A	40 A	50 A	63 A	80 A	100 A	125 A
DX³ 4500/6 kA C and B curve	≤ 6 A	**-**	**64**	**80**	**100**	**700**	**1200**	**1500**	**3000**	**4000**	**T**	**T**
	10 A	**-**	**-**	**80**	**100**	**500**	**700**	**1000**	**1800**	**3000**	**5000**	**T**
	13 A	**-**	**-**	**-**	**100**	**400**	**600**	**1000**	**1500**	**2500**	**4000**	**T**
	16 A	**-**	**-**	**-**	**-**	**300**	**500**	**700**	**1300**	**2000**	**3600**	**5500**
	20 A	**-**	**-**	**-**	**-**	**-**	**400**	**500**	**1000**	**1600**	**3000**	**4000**
	25 A	**-**	**-**	**-**	**-**	**-**	**-**	**500**	**800**	**1300**	**2400**	**3300**
	32 A	**-**	**-**	**-**	**-**	**-**	**-**	**500**	**600**	**1000**	**1800**	**2700**
	40 A	**-**	**-**	**-**	**-**	**-**	**-**	**-**	**600**	**800**	**1600**	**2400**

		Upstream MCB										
		DX³ 25 kA C curve										
Downstream RCBO Ph+N		10 A	16 A	20 A	25 A	32 A	40 A	50 A	63 A	80 A	100 A	125 A
DX³ 4500/6 kA C and B curve	≤ 6 A	**75**	**120**	**150**	**187**	**700**	**1200**	**1500**	**3000**	**4000**	**T**	**T**
	10 A	**-**	**120**	**150**	**187**	**500**	**700**	**1000**	**1800**	**3000**	**5000**	**T**
	13 A	**-**	**120**	**150**	**187**	**400**	**600**	**1000**	**1500**	**2500**	**4000**	**T**
	16 A	**-**	**-**	**150**	**187**	**300**	**500**	**700**	**1300**	**2000**	**3600**	**5500**
	20 A	**-**	**-**	**-**	**187**	**300**	**400**	**500**	**1000**	**1600**	**3000**	**4000**
	25 A	**-**	**-**	**-**	**-**	**240**	**400**	**500**	**800**	**1300**	**2400**	**3300**
	32 A	**-**	**-**	**-**	**-**	**-**	**300**	**500**	**600**	**1000**	**1800**	**2700**
	40 A	**-**	**-**	**-**	**-**	**-**	**-**	**400**	**600**	**800**	**1600**	**2400**

. T = Total discrimination

5. GENERAL CHARACTERISTICS *(continued)*

Discrimination with upstream modular MCBs:
. Discrimination limit with a voltage of 230 V ~ (Values in A)

		Upstream MCB										
		DX³ 25 kA D curve										
Downstream RCBO Ph+N		10 A	16 A	20 A	25 A	32 A	40 A	50 A	63 A	80 A	100 A	125 A
DX³ 4500/6 kA C and B curve	≤ 6 A	**120**	**192**	**240**	**500**	**700**	**1200**	**1500**	**3000**	**4000**	**T**	**T**
	10 A	**-**	**192**	**240**	**300**	**500**	**700**	**1000**	**1800**	**3000**	**5000**	**T**
	13 A	**-**	**-**	**240**	**300**	**400**	**600**	**1000**	**1500**	**2500**	**4000**	**T**
	16 A	**-**	**-**	**240**	**300**	**384**	**500**	**700**	**1300**	**2000**	**3600**	**5500**
	20 A	**-**	**-**	**-**	**300**	**384**	**480**	**600**	**1000**	**1600**	**3000**	**4000**
	25 A	**-**	**-**	**-**	**-**	**384**	**480**	**600**	**800**	**1300**	**2400**	**3300**
	32 A	**-**	**-**	**-**	**-**	**-**	**480**	**600**	**756**	**1100**	**1450**	**2700**
	40 A	**-**	**-**	**-**	**-**	**-**	**-**	**600**	**756**	**1000**	**1250**	**2400**

		Upstream MCB							
		DX³ 50 kA B curve							
Downstream RCBO Ph+N		10 A	16 A	20 A	25 A	32 A	40 A	50 A	63 A
DX³ 4500/6 kA C and B curve	≤ 6 A	**-**	**64**	**170**	**500**	**700**	**1200**	**1500**	**3000**
	10 A	**-**	**-**	**150**	**210**	**500**	**700**	**1000**	**1800**
	13 A	**-**	**-**	**-**	**200**	**400**	**600**	**1000**	**1500**
	16 A	**-**	**-**	**-**	**-**	**300**	**500**	**700**	**1300**
	20 A	**-**	**-**	**-**	**-**	**-**	**400**	**500**	**1000**
	25 A	**-**	**-**	**-**	**-**	**-**	**-**	**500**	**800**
	32 A	**-**	**-**	**-**	**-**	**-**	**-**	**500**	**600**
	40 A	**-**	**-**	**-**	**-**	**-**	**-**	**-**	**600**

. T = Total discrimination

5. GENERAL CHARACTERISTICS *(continued)*

Discrimination with upstream modular MCBs:
. Discrimination limit with a voltage of 230 V ~ (Values in A)

		Upstream MCB								
		DX³ 50 kA C curve								
Downstream RCBO Ph+N		10 A	16 A	20 A	25 A	32 A	40 A	50 A	63 A	80 A
DX³ 4500/6 kA C and B curve	≤ 6 A	**75**	**120**	**170**	**500**	**700**	**1200**	**1500**	**3000**	**4000**
	10 A	**-**	**120**	**150**	**210**	**500**	**700**	**1000**	**1800**	**3000**
	13 A	**-**	**120**	**150**	**200**	**400**	**600**	**1000**	**1500**	**2500**
	16 A	**-**	**-**	**150**	**187**	**300**	**500**	**700**	**1300**	**2000**
	20 A	**-**	**-**	**-**	**187**	**300**	**400**	**500**	**1000**	**1600**
	25 A	**-**	**-**	**-**	**-**	**240**	**400**	**500**	**800**	**1300**
	32 A	**-**	**-**	**-**	**-**	**-**	**300**	**500**	**600**	**1000**
	40 A	**-**	**-**	**-**	**-**	**-**	**-**	**400**	**600**	**800**

		Upstream MCB							
		DX³ 50 kA D curve							
Downstream RCBO Ph+N		10 A	16 A	20 A	25 A	32 A	40 A	50 A	63 A
DX³ 4500/6 kA C and B curve	≤ 6 A	**120**	**192**	**240**	**500**	**700**	**1200**	**1500**	**3000**
	10 A	**-**	**192**	**240**	**300**	**500**	**700**	**1000**	**1800**
	13 A	**-**	**-**	**240**	**300**	**400**	**600**	**1000**	**1500**
	16 A	**-**	**-**	**240**	**300**	**384**	**500**	**700**	**1300**
	20 A	**-**	**-**	**-**	**300**	**384**	**480**	**600**	**1000**
	25 A	**-**	**-**	**-**	**-**	**384**	**480**	**600**	**800**
	32 A	**-**	**-**	**-**	**-**	**-**	**480**	**600**	**756**
	40 A	**-**	**-**	**-**	**-**	**-**	**-**	**600**	**756**

Discrimination with upstream MCCBs:
. Discrimination limit with a voltage of 230 V ~ (Values in A)

Downstream RCBO Ph+N	**Upstream MCCB**	
DX³ 4500/6 kA C and B curve	DPX and DPX³ all models all ratings	DMX³ all models all ratings
	T	**T**

. T = Total discrimination

6. COMPLIANCE AND APPROVALS

In accordance with standard:
. EN/IEC 61009-1
. EN/IEC 62423 (F type)

Usage in special conditions:
. Category C compliant (testing temperature range from -25°C to +70°C, resistant to salt spray) in accordance with the classification defined in Appendix Q of standard IEC/EN 60947-1

Respect for the environment – Compliance with European Union Directives:
. Compliance with Directive 2002/95/EC of 27/01/03 known as "RoHS" which provides for a restriction on the use of dangerous substances such as lead, mercury, cadmium, hexavalent chromium and polybrominated biphenyl (PBB) and polybrominated diphenyl ether (PBDE) brominated flame retardants from 1st July 2006
. Compliance with the Directive 91/338/EEC of 18/06/91 and decree 94-647 of 27/07/04

Plastic materials:
. Halogen free plastic materials.
. Labelling of parts compliant with ISO 11469 and ISO 1043.

Packaging:
. Design and manufacture of packaging compliant with decree 98-638 of 20/07/98 and Directive 94/62/EC

Approvals obtained:
. France: NF

7. CURVES

Thermal-magnetic tripping range typical of C curve RCBOs:

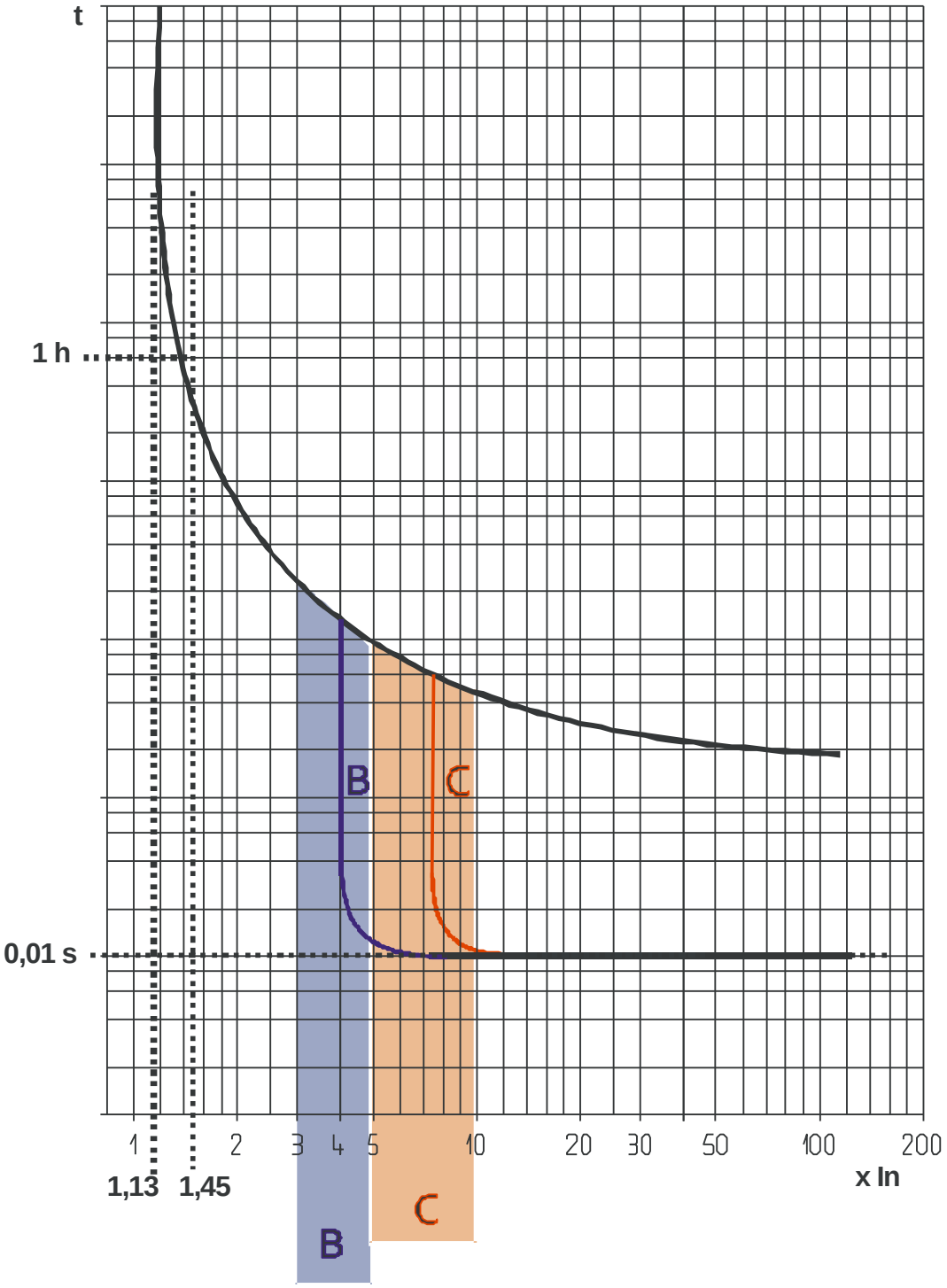

Thermal tripping at ambient temperature = 30°C
In = RCBO rated current

7. CURVES *(continued)*

Average thermal-magnetic tripping curves range typical of C curve RCBOs:

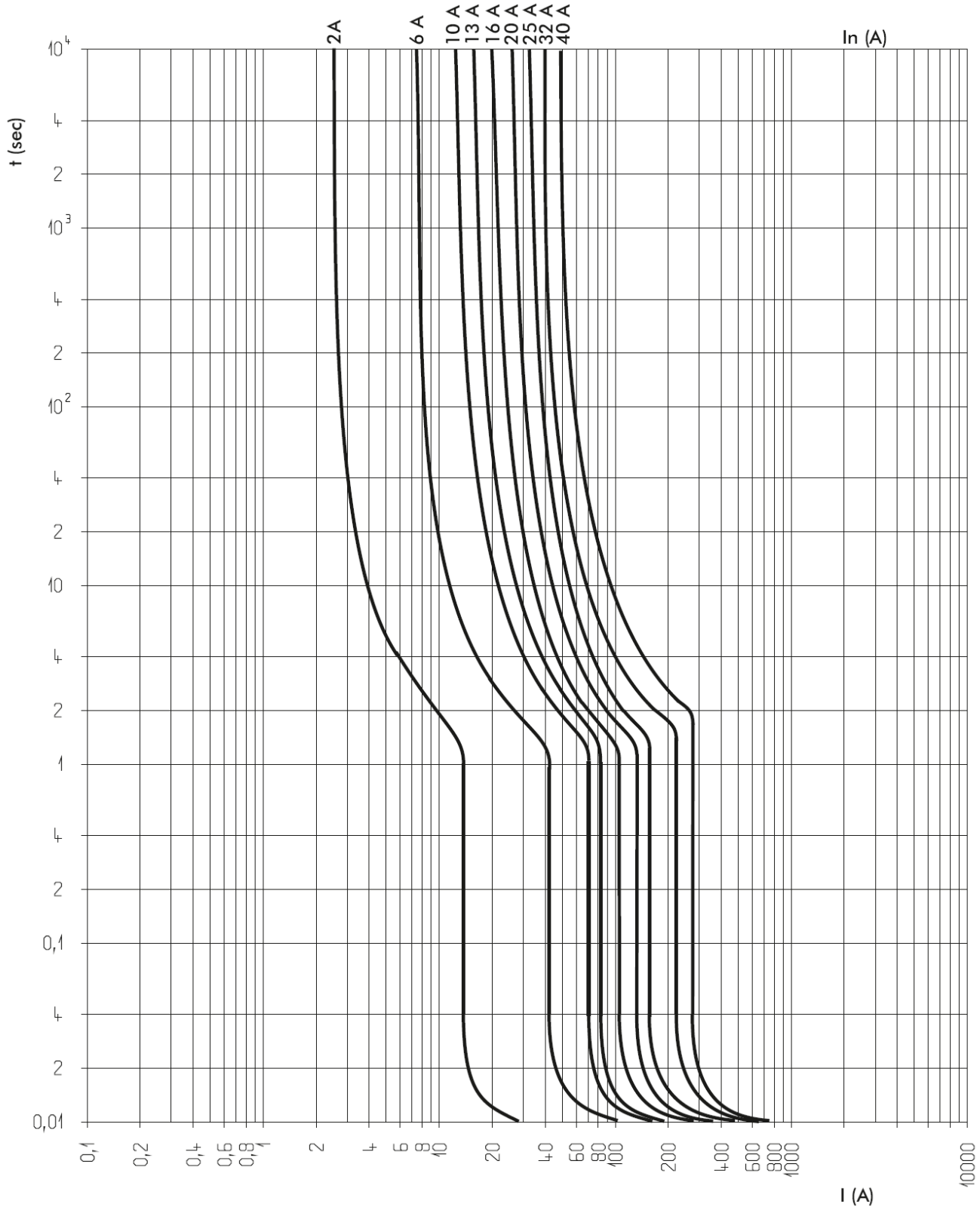

7. CURVES *(continued)*

Average thermal-magnetic tripping curves range typical of B curve RCBOs:

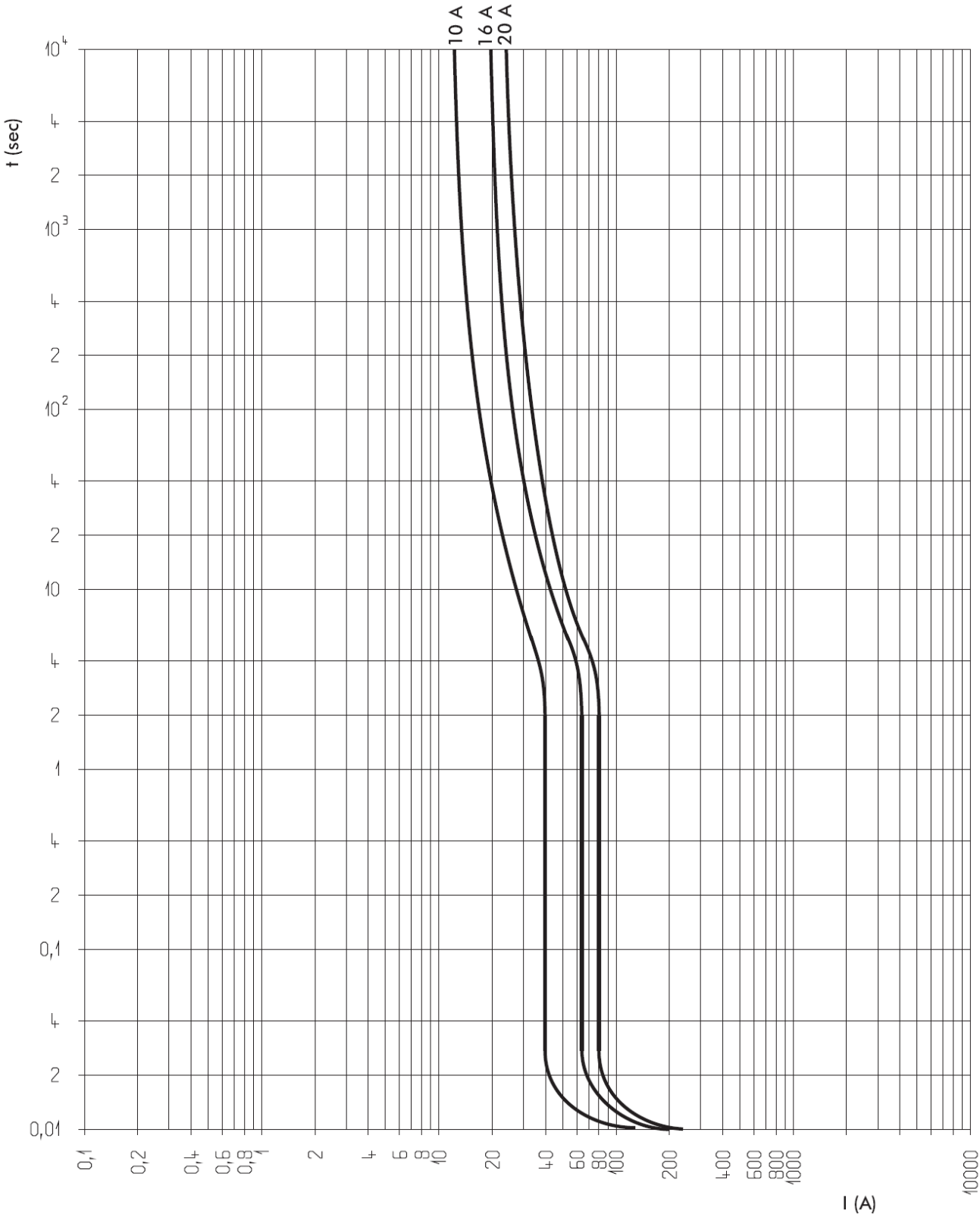

7. CURVES *(continued)*

Current limiting curves:

. C curve RCBOs from 2 A to 40 A

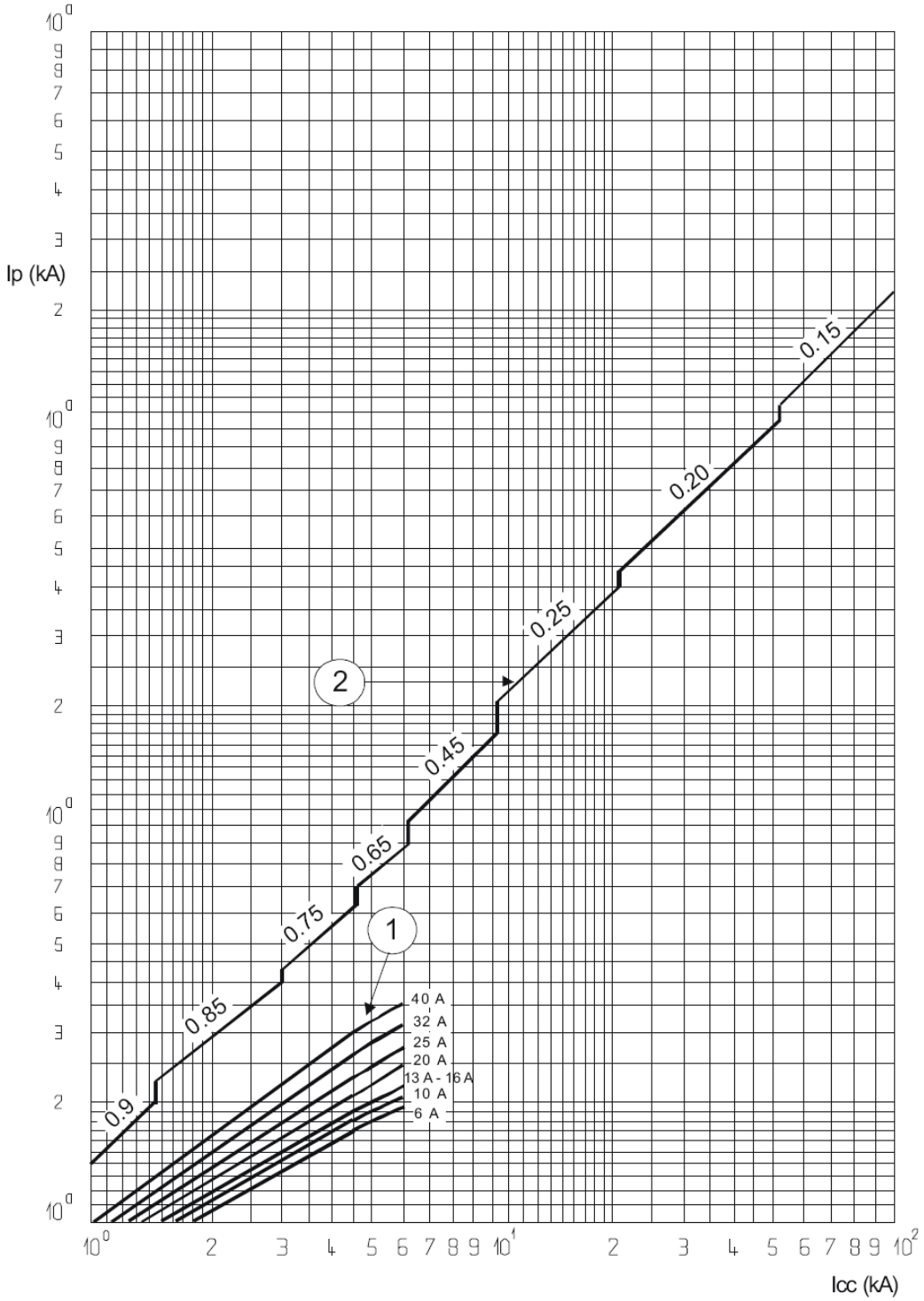

Icc = Prospective short-circuit symmetrical current (rms value in kA)
Ip = Maximum peak value (in kA)
1 = Short-circuit rms currents (max. peak)
2 = Unlimited peak currents (max.), corresponding to power factors shown above (0.15 to 0.9)
NB: For 2A rating, the limited values are less than 1kA

7. CURVES *(continued)*

Thermal stress limiting curves:

. C curve RCBOs (230V/50Hz)

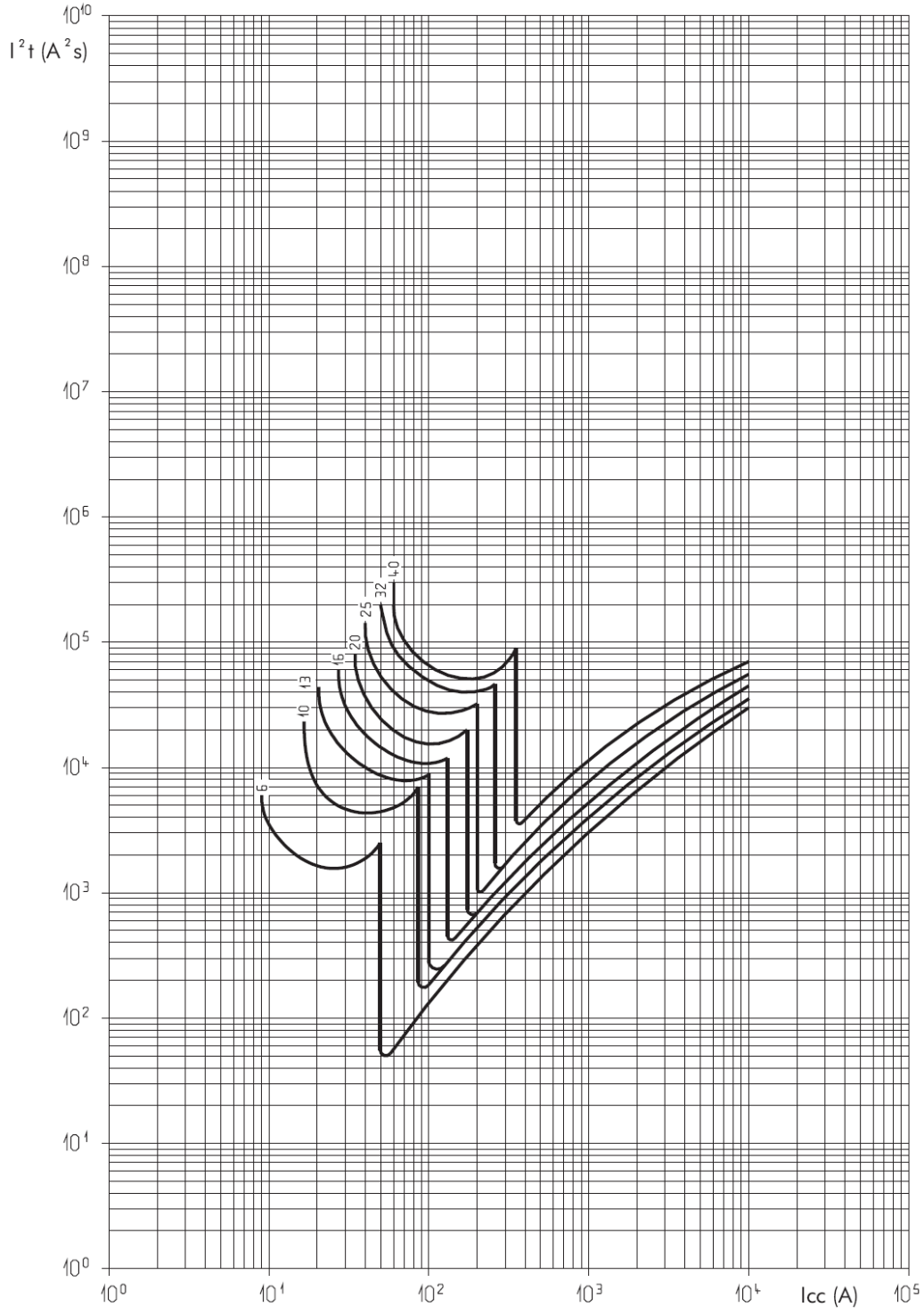

Icc = Prospective short-circuit symmetrical current (rms value in A)
I^2t = Limited thermal stress (in A s)^2
NB:
-The 2A rating limits to values less than 3,000 A s^2

7. CURVES *(continued)*

Tripping current curves:

. Tripping time curve depending on the value of the fault current:

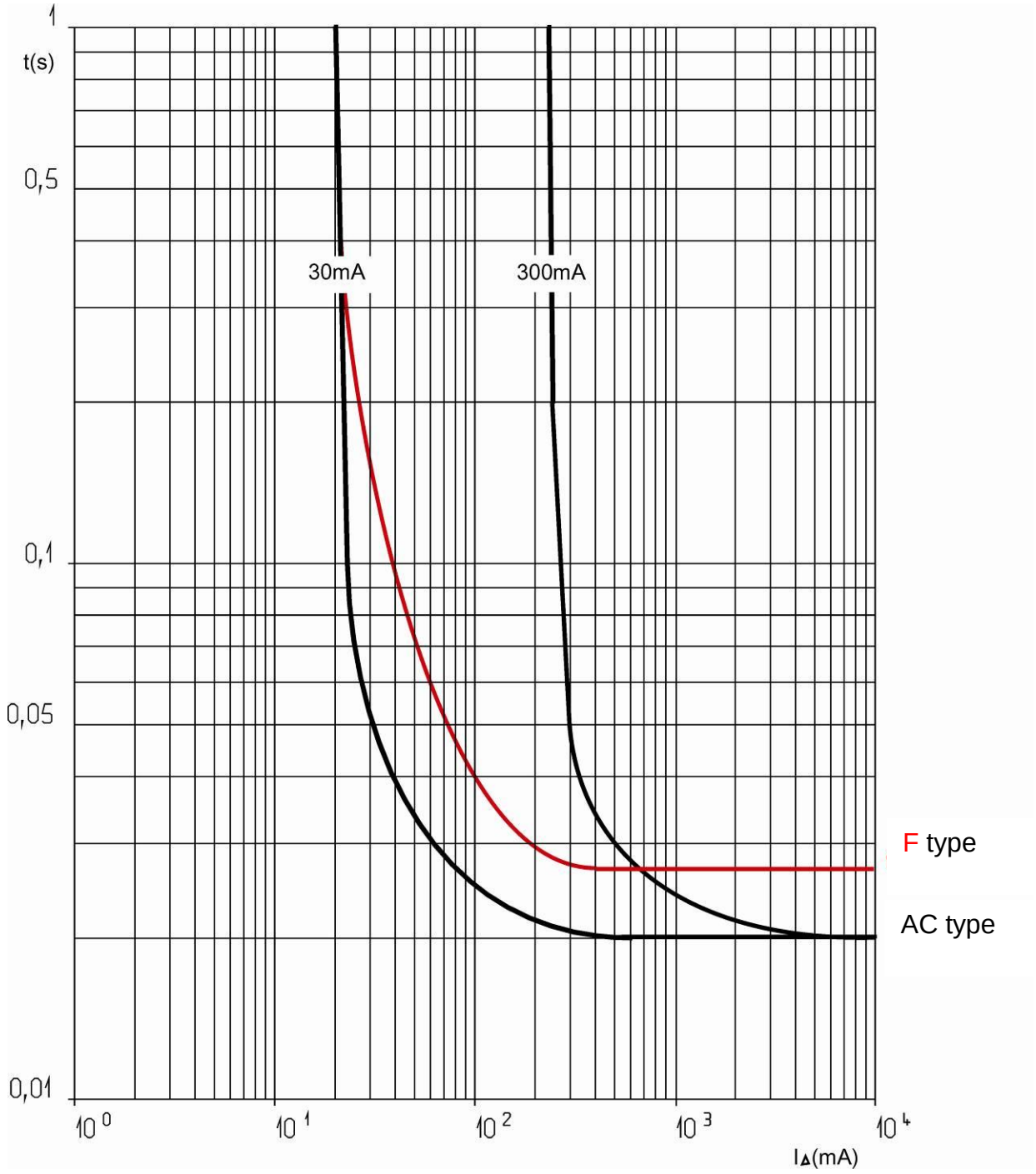

8. AUXILIARIES AND ACCESSORIES

Wiring accessories:
. Supply busbar:
- Single-pole universal supply busbar (Cat. No. 4 049 26 / 37)
- 4-pole "screw" supply busbar (Cat. No. 4 052 10) and 4-pole "head of group" supply busbar (Cat. No. 4 052 00 / 01 / 02)

. Connection terminals (Cat. No. 4 049 05)
. Sealable screw cover (Cat. No. 4 063 04)

Signalling auxiliaries:
. Auxiliary contact (0.5 module, Cat. No. 4 062 58)
. Fault signalling contact (0.5 module, Cat. No. 4 062 60)
. Auxiliary contact that can be changed into fault signalling contact (0.5 module, Cat. No. 4 062 62)
. Auxiliary contact + fault signalling contact that can be changed into 2 auxiliary contacts (1 module, Cat. No. 4 062 66)

Control auxiliaries:
. Shunt trip (1 module, Cat. No. 4 062 76 / 78)
. Autonomous shunt trip release (1 module, Cat. No. 4 062 80 / 82)
. Stand-alone release for N/C push-button (1.5 module, Cat. No. 4 062 87)
. Power Overvoltage Protection (1 module, Cat. No. 4 062 86)

Motor-driven control modules:
. Motor-driven control module (1 module, Cat. No. 4 062 91)
. Motor-driven control module with integrated automatic reset. (2 modules, Cat. Nos. 4 062 93, 4 062 95)

STOP&GO automatic resetting modules:
. STOP&GO automatic resetting module (2 modules, Cat. No. 4 062 88)
. STOP&GO automatic resetting module with auto-test (2 modules, Cat. Nos. 4 062 89)

Possible combinations of auxiliaries and RCBOs:
. The auxiliaries are installed to the left of the RCBOs
. Maximum number of auxiliaries = 3
. Maximum number of 1 module signalling auxiliaries = 2
. Maximum number of control auxiliaries (Cat. Nos. 4 062 76 to 4 062 87) = 1
. The control auxiliary trip (Cat. Nos. 4 062 76 to 4 062 87) must mandatorily be placed to the left of the signalling auxiliaries (Cat. Nos. 4 062 58 to 4 062 66) where the auxiliaries from these 2 families are connected to the same RCBO

Sealing:
. Possible in the open or closed positions

Locking options:
. Via padlock 5 mm in diameter (Cat. No. 4 063 13) or padlock 6 mm in diameter (Cat. No. 0 227 97) and padlock support (Cat. No. 4 063 03)

Installation software:
. XL PRO³

9. SAFETY:

For your safety your electrical installation is equipped with residual current protection which must be tested periodically.
In the absence of any national regulations on the time period required for this, Legrand recommends that this test be carried out every month: press the "T" test button, the device should trip. Please call an electrician immediately if this does not happen as the safety level of your installation has been reduced.
The presence of residual current protection does not remove the need to observe all the precautions associated with using electrical energy.