OMRON

Sealed Tactile Switch

B3W

Tactile Switch with Sealed Construction for Automatic Soldering

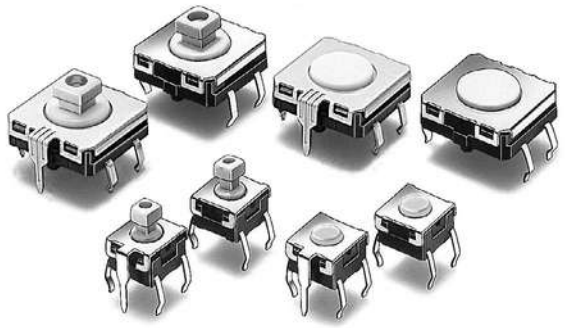

- Sealed construction conforming to IP67 (IEC-60529) provides high reliability in locations exposed to dust or water. (* Excluding the terminal section.)
- Available in two sizes: 6 × 6 mm and 12 × 12 mm sizes.
- Ground terminal available to protect against static electricity.
- Projected plunger types that allow the installation of B32-series Special Key Tops are available.

RoHS Compliant

■ List of Models

Type	Plunger	Height	Operating force (OF)	Plunger color	Bags (in units of 100 Switches)	
					Without ground terminal	With ground terminal
6 × 6 mm B3W-1000	Flat type 	4.3 mm	1.57 N {160 gf}	White	B3W-1000	B3W-1100
			2.26 N {230 gf}	Yellow	B3W-1002	B3W-1102
		5.0 mm	1.57 N {160 gf}	White	B3W-1020	---
			2.26 N {230 gf}	Yellow	B3W-1022	---
	Projected type 	7.3 mm	1.57 N {160 gf}	White	B3W-1050	B3W-1150
			2.26 N {230 gf}	Yellow	B3W-1052	B3W-1152
12 × 12 mm B3W-4000	Flat type 	4.3 mm	1.96 N {200 gf}	White	B3W-4000	B3W-4100
			3.43 N {350 gf}	Yellow	B3W-4005	B3W-4105
	Projected type 	7.3 mm	1.96 N {200 gf}	White	B3W-4050	B3W-4150
			3.43 N {350 gf}	Yellow	B3W-4055	B3W-4155

Note: Bulk Packaged, 100 switches per bag. Order in multiples of the package quantity.

■ Ratings/Characteristics

Ratings	1 to 50 mA, 5 to 24 VDC (resistive load)
Ambient operating temperature	-25°C to +70°C at 60%RH max. (with no icing or condensation)
Ambient operating humidity	35% to 85% (at +5 to +35°C)
Contact form	SPST-NO
Contact resistance	100 mΩ max. (initial value) (rated: 1 mA, 5 VDC)
Insulation resistance	100 MΩ min. (at 250 VDC)
Dielectric strength	500 VAC, 50/60 Hz for 1 min
Bounce time	5 ms max.
Vibration resistance	Malfunction: 10 to 55 Hz, 1.5 mm double amplitude
Shock resistance	Destruction: 1,000 m/s^2 {approx. 100 G} max. Malfunction: 100 m/s^2 {approx. 10 G} max.
Durability	B3W-1000: 1.57 N (standard force):1,000,000 operations min. 2.26 N (high-force):300,000 operations min. B3W-4000: 1.96 N (standard force):3,000,000 operations min. 3.43 N (high-force):1,000,000 operations min.
Weight	6 × 6 mm: approx. 0.3 g, 12 × 12 mm: approx. 1 g

■ Operating Characteristics

Item	**B3W-1000 series**		**B3W-4000 series**	
	1.57 N	**2.26 N**	**1.96 N**	**3.43 N**
Operating force (OF)	1.57 N {160 gf} max.	2.26 N {230 gf} max.	1.96 N {200 gf} max.	3.43 N {350 gf} max.
Releasing force (RF)	0.2 N {20 gf} min.	0.49 N {50 gf} min.	0.29 N {30 gf} min.	0.49 N {50 gf} min.
Pretravel (PT)	$0.25^{+0.2}/_{-0.1}$ mm		$0.3^{+0.2}/_{-0.1}$ mm	

■ Model Structure

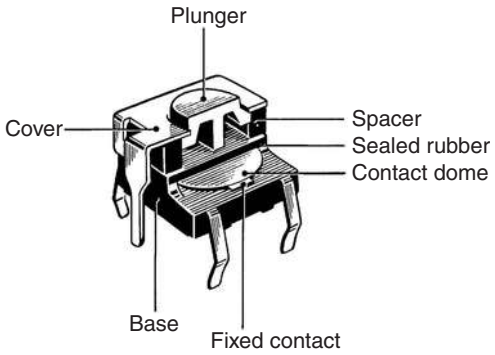

■ Dimensions (Unit: mm)

Note: The numbers used for terminals in the following graphics are indicated in the "Bottom View" diagram below. In this diagram, the Switch is rotated so that the terminals are on the right and left-hand sides, and the OMRON logo appears the right way up.



■ 6 × 6 mm Models

Flat Plunger Type (without Ground Terminal)
B3W-1000
B3W-1002



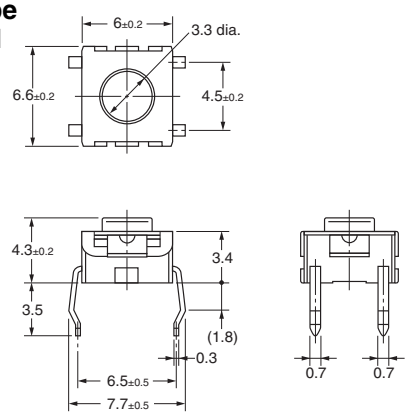

PCB Mounting (Top View) (Single-sided PCB, t=1.6)

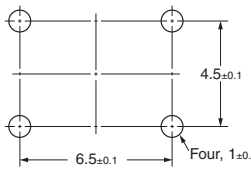

Terminal Arrangement /Internal Connections (Top View)

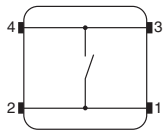

Flat Plunger Type (with Ground Terminal)
B3W-1100
B3W-1102

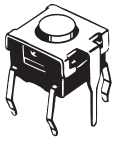

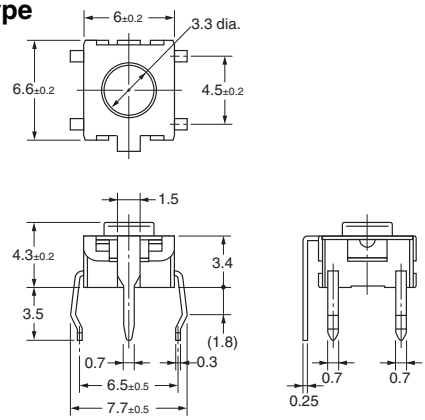

PCB Mounting (Top View) (Single-sided PCB, t=1.6)

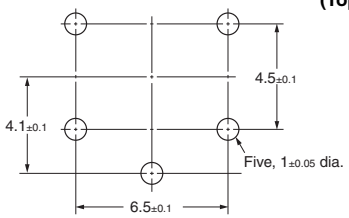

Terminal Arrangement /Internal Connections (Top View)

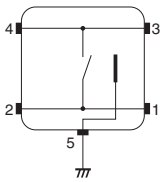

Flat Plunger Type (without Ground Terminal)
B3W-1020
B3W-1022

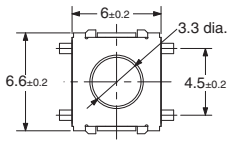

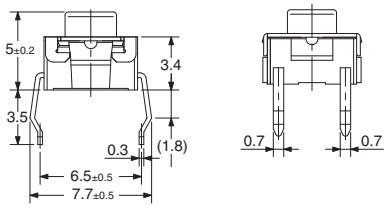

PCB Mounting (Top View) (Single-sided PCB, t=1.6)

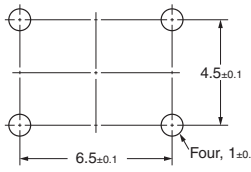

Terminal Arrangement /Internal Connections (Top View)

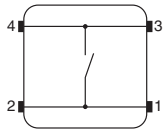

Note: Unless otherwise specified, a tolerance of ±0.4 mm applies to all dimensions. No terminal numbers are indicated on the Switches.

Projected Plunger Type (without Ground Terminal)

B3W-1050
B3W-1052

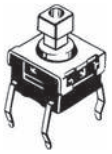

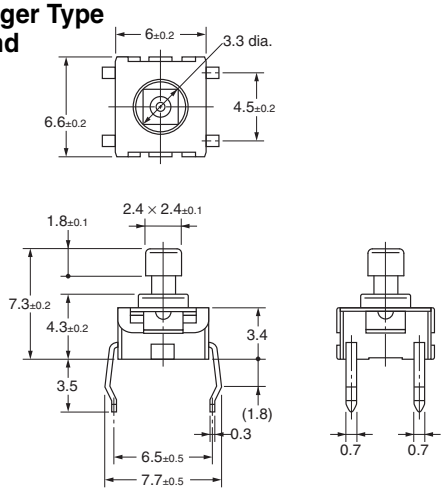

PCB Mounting (Top View)
(Single-sided PCB, t=1.6)

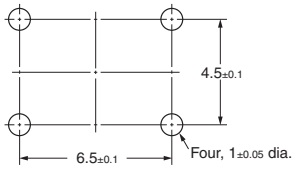

Terminal Arrangement /Internal Connections (Top View)

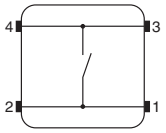

Projected Plunger Type (with Ground Terminal)

B3W-1150
B3W-1152

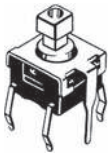

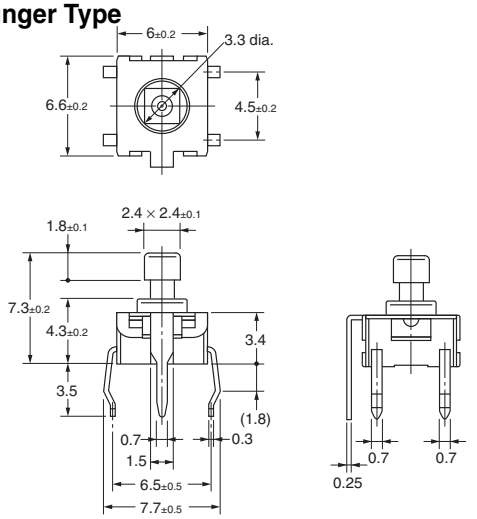

PCB Mounting (Top View)
(Single-sided PCB, t=1.6)

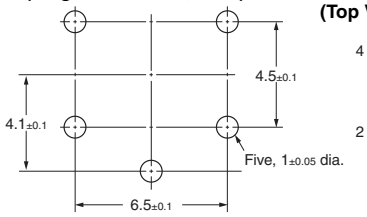

Terminal Arrangement /Internal Connections (Top View)

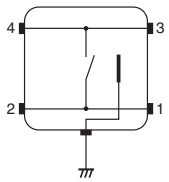

Note: Unless otherwise specified, a tolerance of ±0.4 mm applies to all dimensions. No terminal numbers are indicated on the Switches.

■ 12 × 12 mm Models

Flat Plunger Type (without Ground Terminal)

B3W-4000
B3W-4005



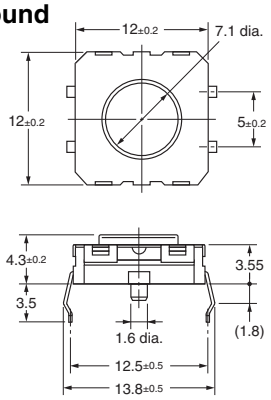

PCB Mounting (Top View)
(Single-sided PCB, t=1.6)

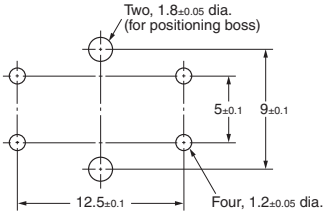

Terminal Arrangement /Internal Connections (Top View)

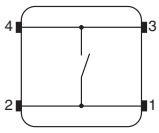

Flat Plunger Type (with Ground Terminal)

B3W-4100
B3W-4105



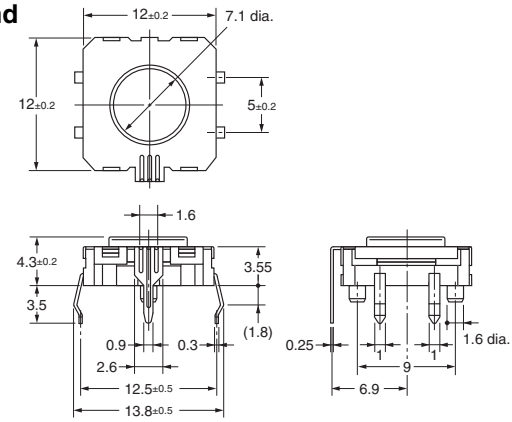

PCB Mounting (Top View)
(Single-sided PCB, t=1.6)

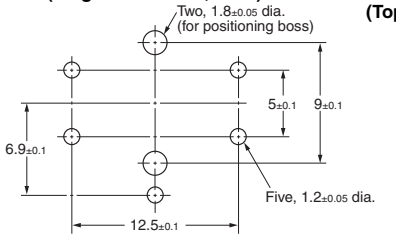

Terminal Arrangement /Internal Connections (Top View)

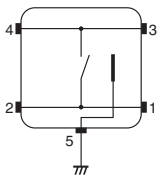

Projected Plunger Type (without Ground Terminal)

B3W-4050
B3W-4055



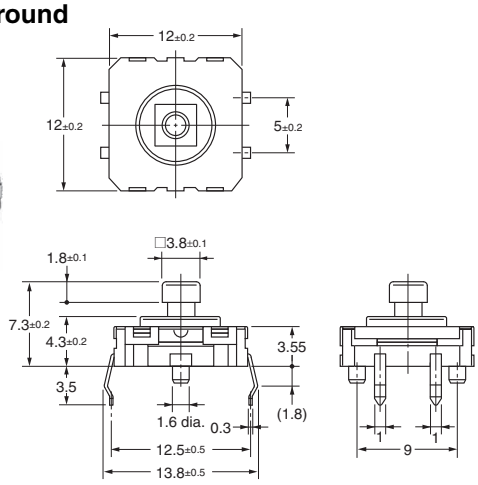

PCB Mounting (Top View)
(Single-sided PCB, t=1.6)

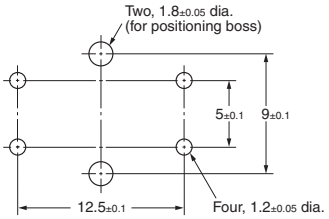

Terminal Arrangement /Internal Connections (Top View)

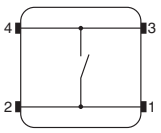

Projected Plunger Type (with Ground Terminal)

B3W-4150
B3W-4155

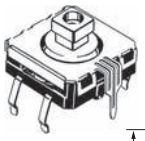

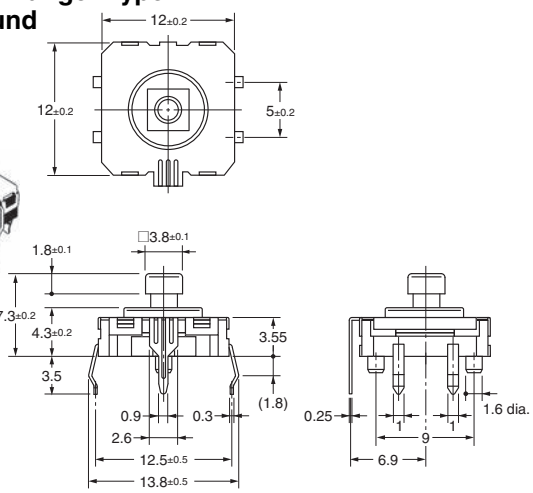

PCB Mounting (Top View)
(Single-sided PCB, t=1.6)

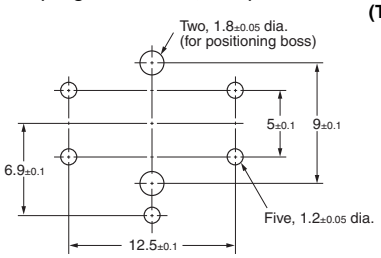

Terminal Arrangement /Internal Connections (Top View)

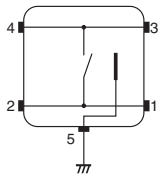

Note: Unless otherwise specified, a tolerance of ±0.4 mm applies to all dimensions.

■ Key Tops

B32-series Special Key Tops are available for projected plunger models. Refer to the Datasheet of B32 for details.

■ Precautions

Be sure to read the safety precautions common to all Tactile Switches for correct use.

- Application examples provided in this document are for reference only. In actual applications, confirm equipment functions and safety before using the product.
- Consult your OMRON representative before using the product under conditions which are not described in the manual or applying the product to nuclear control systems, railroad systems, aviation systems, vehicles, combustion systems, medical equipment, amusement machines, safety equipment, and other systems or equipment that may have a serious influence on lives and property if used improperly. Make sure that the ratings and performance characteristics of the product provide a margin of safety for the system or equipment, and be sure to provide the system or equipment with double safety mechanisms.

Note: Do not use this document to operate the Unit.

OMRON Corporation
ELECTRONIC AND MECHANICAL COMPONENTS COMPANY **Contact: www.omron.com/ecb**

Cat. No. A075-E1-06
0812(0207)(O)