- > - 0,87 bar
- > Fast response
- > Compact, lightweight
- > Low sound level
- > Compressed air driven
- > Simple installation
- > Standard and non-return valve types



Technical features

Medium:
Compressed air, filtered and non-lubricated
Operation:
Multi ejektor system

Operating pressure:
6 bar (87 psi) max.
Vacuum:
- 0,87 bar (-12 psi) max.
Sound level:
75 ... 80 dB (A)

Operating temperature:
0 ... +80°C (+32 ... +176°F)
for M/58102/10 ... /30
0 ... +60°C (+32 ... +140°F)
for M/58102/60 ... /120
Air supply must be dry enough to avoid ice formation at temperatures below +2°C (35°F)

Materials:
M/58102/10 to M/58102/30
Vacuum chips: ABS with 30% fibreglass,
Sub base: Aluminium
Seals: NBR
M/58102/60 to M/58102/120
Housing: Aluminium
End caps: ABS
Mountings: Steel
Seals: NBR or PUR

Technical data

Symbol	Valve type	Silencer *2)	Induced air *1) (Nl/min)	Air consumption (l/min)	Weight (kg)	Model
	Standard	Ported	80	49	0,080	M/58102/10
	Standard	Ported	160	98	0,095	M/58102/20
	Standard	Ported	240	144	0,110	M/58102/30
	Standard	Integral	480	285	0,855	M/58102/60
	Standard	Integral	708	471	1,105	M/58102/90
	Standard	Integral	910	528	1,150	M/58102/120
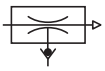	Non-return valve	Ported	80	49	0,080	M/58102/N/10
	Non-return valve	Ported	160	98	0,095	M/58102/N/20
	Non-return valve	Ported	240	144	0,110	M/58102/N/30
	Non-return valve	Integral	480	285	0,855	M/58102/N/60
	Non-return valve	Integral	708	471	1,105	M/58102/N/90
	Non-return valve	Integral	910	528	1,150	M/58102/N/120

*1) Values given are theoretical and apply to an operating pressure of 6 bar (87 psi).
*2) For models with ported, use silencer number M/58019

Our policy is one of continued research and development. We therefore reserve the right to amend, without notice, the specifications given in this document. (1994 - 3001d) © 2015 Norgren GmbH

Flow characteristics
(all values given apply to an atmospheric pressure of 1013 mbar)

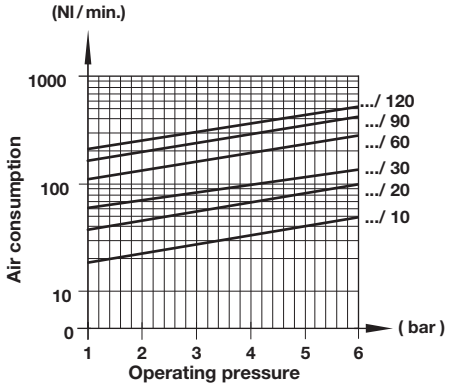

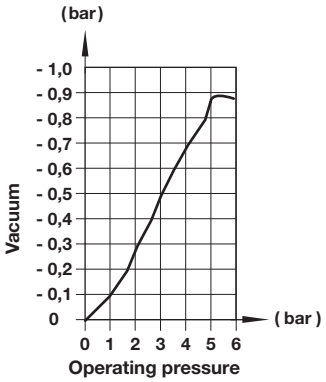

Induced air (Nl/min), free air

0 bar	-0,1 bar	-0,2 bar	-0,3 bar	-0,4 bar	-0,5 bar	-0,6 bar	-0,7 bar	-0,8 bar	Model
80	55	32	28	25	18	13	5	1,5	M/58102/10
160	110	64	56	50	36	26	10	3	M/58102/20
240	165	96	84	75	54	39	15	4,5	M/58102/30
480	270	182	168	150	108	78	30	9	M/58102/60
708	427	273	252	225	162	117	45	13,5	M/58102/90
910	568	355	336	300	216	156	60	18	M/58102/120

Note: Values given in the tables are theoretical and apply to an operating pressure of 5 bar

Time (sec) for evacuation of 1 litre volume to vacuum

-0,1 bar	-0,2 bar	-0,3 bar	-0,4 bar	-0,5 bar	-0,6 bar	-0,7 bar	-0,8 bar	-0,85 bar	Model
0,07	0,2	0,45	0,75	1,15	1,73	2,61	4,13	5,82	M/58102/10
0,035	0,1	0,23	0,37	0,57	0,86	1,32	2,07	2,92	M/58102/20
0,023	0,07	0,15	0,25	0,38	0,58	0,87	1,38	1,94	M/58102/30
0,012	0,034	0,08	0,12	0,19	0,29	0,44	0,69	0,97	M/58102/60
0,007	0,023	0,05	0,08	0,13	0,19	0,29	0,46	0,65	M/58102/90
0,006	0,017	0,04	0,06	0,1	0,15	0,22	0,35	0,49	M/58102/120

Recommended tube dimensions (internal diameter)

Compressed air	Vacuum	Exhaust	Model
> Ø 3	> Ø 7	> Ø 9	M/58102/10
> Ø 3	> Ø 7	> Ø 9	M/58102/20
> Ø 4	> Ø 9	> Ø 9	M/58102/30
> Ø 4	> Ø 19	–	M/58102/60
> Ø 5	> Ø 19	–	M/58102/90
> Ø 5	> Ø 22	–	M/58102/120

Accessories

Silencer	Vacuum gauge
	
Page 3	**Page 3**
M/58019	M/58080

Our policy is one of continued research and development. We therefore reserve the right to amend, without notice, the specifications given in this document. (1994 - 3001d) © 2015 Norgren GmbH

Dimensions

M/58102/10 ... 30
M/58102/N/10 ... 30

Dimensions in mm
Projection/First angle

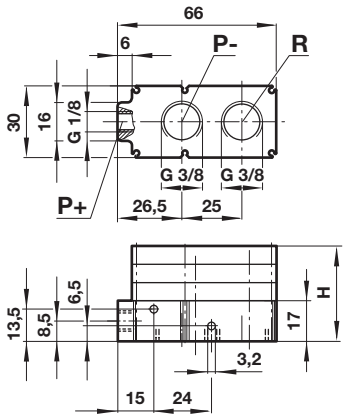

H	Model
24,5	M/58102/10
32	M/58102/20
39,5	M/58102/30

M/58102/60 ... 120
M/58102/N/60 ... 120

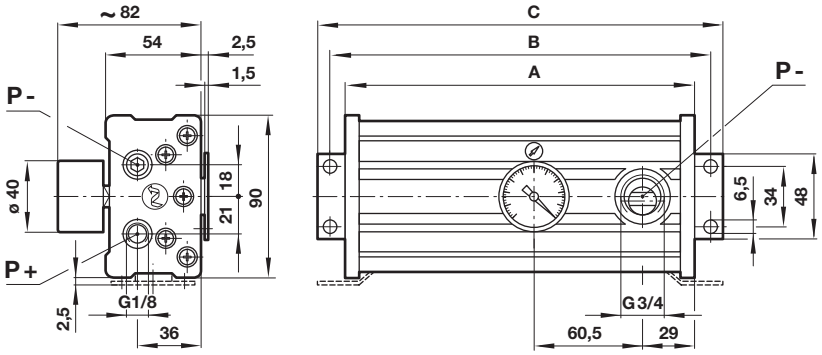

A	B	C	Model
136	154	168	M/58102/60
196	214	228	M/58102/90
196	214	228	M/58102/120

Silencer

Model: M/58019
Weight: 0,010 kg

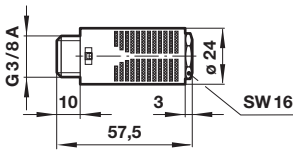

Gauge

Model: M/58080
Weight: 0,063 kg

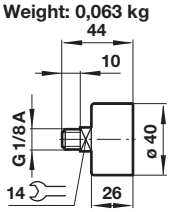

Warning

These products are intended for use in industrial compressed air systems only. Do not use these products where pressures and temperatures can exceed those listed under **»Technical features/data«**.
Before using these products with fluids other than those specified, for non-industrial applications, life-support systems or other applications not within published specifications, consult IMI NORGREN.

Through misuse, age, or malfunction, components used in fluid power systems can fail in various modes.

The system designer is warned to consider the failure modes of all component parts used in fluid power systems and to provide adequate safeguards to prevent personal injury or damage to equipment in the event of such failure.
System designers must provide a warning to end users in the system instructional manual if protection against a failure mode cannot be adequately provided.
System designers and end users are cautioned to review specific warnings found in instruction sheets packed and shipped with these products.

Our policy is one of continued research and development. We therefore reserve the right to amend, without notice, the specifications given in this document. (1994 - 3001d) © 2015 Norgren GmbH