Sandwich Mounts - Type SW/SWR

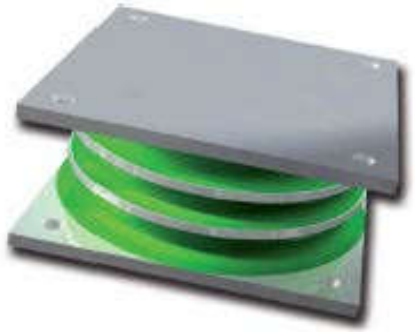

Applications

- Instruments
- Measuring Equipment
- Large Machinery
- Engines
- Pumps
- Radiators

The SW & SWR range of Mounts are low frequency elastomeric noise and vibration isolators for industrial equipment and machinery.

They are normally used to insulate the transmission of noise and vibration in vertically applied loads.

Their applications can include Generators, Blowers, Pumps, Road Machines or any equipment that by design is unbalanced. They can also be used for isolating instrumentation in mobile, military or road applications.

SW Range

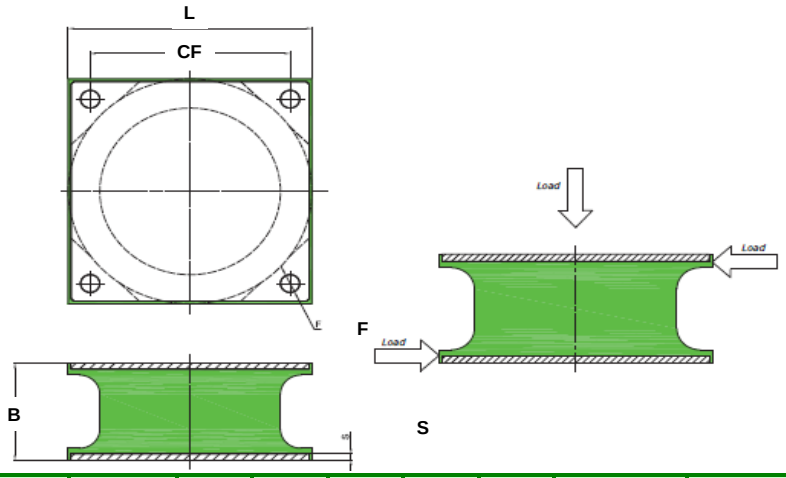

RS Ref:	Fibet Ref:	Hardness (IRHD)	L (mm)	B (mm)	CF (mm)	F (mm)	S (mm)	Average Compression Stiffness (daN/mm)	Max. Compression Load (daN)	Average Shear Stiffness (daN/mm)	Max. Shear Load (daN)
201-2357	SW150KMG	60	150	65	126	11	8	170	1,650.0	27.0	215.0

SWR Range

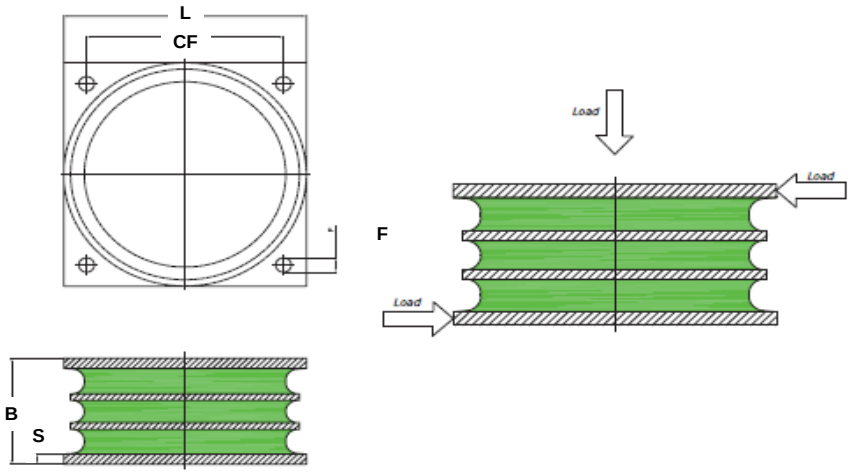

RS Ref:	Fibet Ref:	Hardness (IRHD)	L (mm)	B (mm)	CF (mm)	F (mm)	S (mm)	Average Compression Stiffness (daN/mm)	Max. Compression Load (daN)	Average Shear Stiffness (daN/mm)	Max. Shear Load (daN)
201-2359	SWR150W	45	166	63	136	13.5	6	650	3,000.0	14.0	300.0
201-2360	SWR150M	45	166	63	136	13.5	6	1,100	4,950.0	23.0	580.0
201-2361	SWR150H	45	166	63	136	13.5	6	1,700	7,650.0	33.0	850.0