


# TB 40-1
## Temperature Limiter

**Applicable for heating and cooling applications**

**For all types of thermocouples and resistance transducers**

**BluePort Front interface and BlueControl Software**

**Maintenance manager and error list**

**Alarm reset via RESET-key**

**Alarm reset via digital**

**Type tested to EN 14597 (replaces DIN 3440) and cULus**

*universal line*

## APPLICATIONS

- All applications where an over or under temperature fault condition could present fire hazard or other hazard
- Heat generating plants with outflow temperatures up to 120°C (DIN 4751)
- Hot-water plants with outflow temperatures above 110°C (DIN 4752)
- Thermal transfer plants with organic transfer media (DIN 4754)
- Oil-heated plants (DIN 4755)

## DESCRIPTION

### Front interface and Engineering Tool

Via the BlueControl software incl. its simulation functions, and especially the convenient BluePort front panel interface, the required set-up for a specific control task can be determined without a detailed study of the operating instructions.

### Plug-in module

KS 40-1 controllers are built as plug-in modules. This enables them to be replaced very quickly without tools, and without disturbing the wiring. Off cause almost all adjustments can be done comfortably over the instrument front. (see page 4, BlueControl)

### Password protection

The access to the limit value is protected with a password and the internal security switch.

## TECHNICAL DATA

## INPUTS

### PROCESS VALUE INPUT INP1

| | |
|---|---|
| Resolution: | > 14 bits |
| Decimal point: | 0 to 3 decimals |
| Limiting frequency: | 2 Hz |
| Digital input filter: | adjustable 0,000...9999 s |
| Scanning cycle: | 100 ms |
| Measured value correction: | 2-point or offset correction |

### Thermocouples (Table 1)

| | |
|---|---|
| Input impedance: | ≥ 1 MΩ |
| Effect of source resistance: | 1 µV/Ω |

### Cold junction compensation

| | |
|---|---|
| Max. additional error | ± 0,5 K |

### Sensor break monitoring

| | |
|---|---|
| Sensor current: | ≤ 1 µA |

Operating sense configurable (see page 2)

### Resistance thermometer

| | |
|---|---|
| Connection: | 3-wire |
| Lead resistance: | max. 30 Ω |
| Input circuit monitor: | Break and short circuit |

### Special measuring range

The BlueControl software can be used to match the input to the sensor KTY 11-6 (characteristic is stored in the controller).

| | |
|---|---|
| Physical measuring range: | 0...4500 Ω |
| Linearization segments | 16 |

### Current and voltage signals

| | |
|---|---|
| Span start, end of span: | anywhere within measuring range |
| Scaling: | selectable -1999...9999 |
| Linearization: | 16 segments, adaptable with BlueControl |
| Decimal point: | adjustable |
| Input circuit monitor: | 12,5% below span start (2mA, 1V) |

### CONTROL INPUT DI1 (RESET)

Connection of a potential-free contact suitable for switching „dry" circuits.

| | |
|---|---|
| Switched voltage: | 2,5 V |
| Switched current: | 50 µA |

## OUTPUTS

### LC RELAY OUTPUT

#### Function

Interruption of heating or cooling power supply if the adjusted limit is reached.

| | |
|---|---|
| Contacts: | Potential-free changeover contact |
| Max. contact rating: | 500 VA, 250 VAC, 2A at 48...62 Hz, resistive load |
| Min. contact rating: | 5 V, 10 mA AC/DC |
| Operating life (electric): | 600.000 duty cycles with max. rating |

## *RELAY OUTPUTS OUT1, OUT2*

### *Function*

Additional alarms with max, min or max and min monitoring with adjustable hysteresis

### *Signals which can be monitored:*

- Process value (absolute)
- Difference between process value and adjusted limit value LC (relative)
- Sensor break or short circuit (Pt100)

Depending on selected input type, the input signal is monitored for break and short circuit.

| | |
|---|---|
| Contacts: | 2 NO contacts with common connection |
| Max. contact rating: | 500 VA, 250 VAC, 2A at 48...62 Hz, resistive load |
| Min. contact rating: | 6 V, 1 mA DC |
| Operating life (electric): | 800.000 duty cycles with max. rating |

*Table 1 Thermocouple ranges*

| Thermocouple | | Range | | Accuracy | Resolution (∅) |
|---|---|---|---|---|---|
| L | Fe-CuNi (DIN) | -100...900°C | -148...1652°F | ≤ 2 K | 0,1 K |
| J | Fe-CuNi | -100...1200°C | -148...2192°F | ≤ 2 K | 0,1 K |
| K | NiCr-Ni | -100...1350°C | -148...2462°F | ≤ 2 K | 0,2 K |
| N | Nicrosil/Nisil | -100...1300°C | -148...2372°F | ≤ 2 K | 0,2 K |
| S | PtRh-Pt 10% | 0...1760°C | 32...3200°F | ≤ 2 K | 0,2 K |
| R | PtRh-Pt 13% | 0...1760°C | 32...3200°F | ≤ 2 K | 0,2 K |
| T | Cu-CuNi | -200...400°C | -328...752°F | ≤ 2 K | 0,05 K |
| C | W5%Re-W26%Re | 0...2315°C | 32...4199°F | ≤ 2 K | 0,4 K |
| D | W3%Re-W25%Re | 0...2315°C | 32...4199°F | ≤ 2 K | 0,4 K |
| E | NiCr-CuNi | -100...1000°C | -148...1832°F | ≤ 2 K | 0,1 K |
| B[1] | PtRh-Pt6% | 0(100)...1820°C | 32(212)...3308°F | ≤ 3 K | 0,3 K |
| Special | | -25....75 mV | | ≤ 0,1 % | 0,01 % |

*(1) values applied above100°C*

*Table 2 RTD's*

| Type | Sensor current | Range | | Accuracy | Resolution (∅) |
|---|---|---|---|---|---|
| Pt100 | 0,2 mA | -200...850°C | -328...1562°F | ≤ 1 K | 0,1 K |
| Pt1000 | | -200...200°C | -328...392°F | ≤ 2 K | 0,1 K |
| KTY 11-6* | | -50...150 °C | -58...302 °F | ≤ 2 K | 0,05 K |

** or special*

*Table 3 Current and voltage*

| Range | Input resistance | Accuracy | Resolution (∅) |
|---|---|---|---|
| 0-10 Volt | ≈ 110 kΩ | ≤ 0,1 % | 0,6 mV |
| 0-20 mA | 49 Ω (voltage requirement≤ 2,5 V) | ≤ 0,1 % | 1,5 µA |

*Dimensions (mm):*

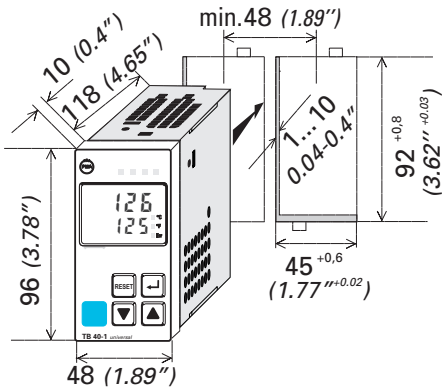


*Electrical connections:*

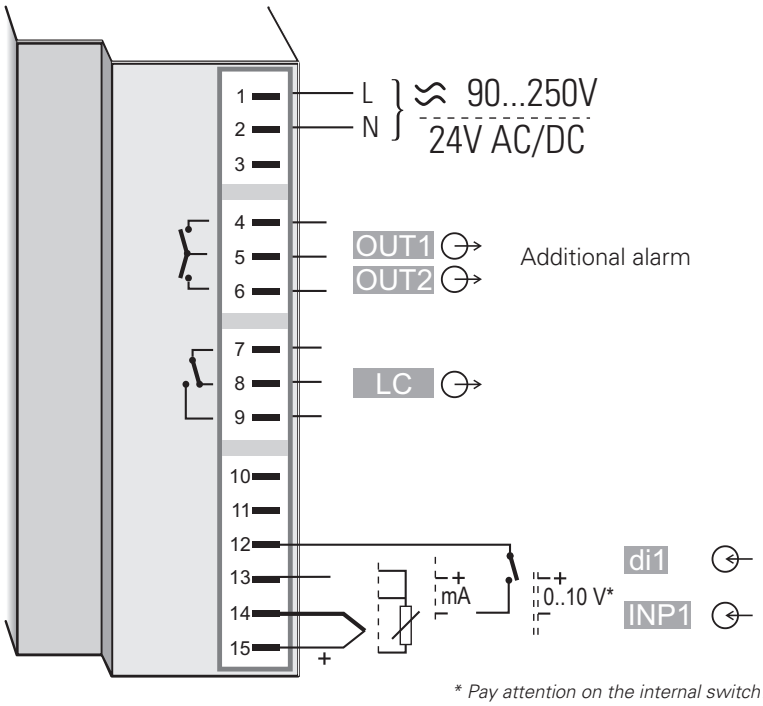


** Pay attention on the internal switch!*

## MAINTENANCE MANAGER

Display of error signals, warnings, and latched limit messages in the error list. Signals are latched, and can be reset manually.

Possible signals in the error list:

Sensor break, short circuit, reversed polarity
latched limit messages
Re-calibration warning
Internal fault (RAM, EEPROM, ...)

*Flashing Error LED indicates active alarm in the error list:*




## OPERATION AND DISPLAY

### Display

| | |
|---|---|
| Process value: | LED with 7 segments, 10,5 mm |
| Lower display: | LED with 7 segments, 7,8 mm |

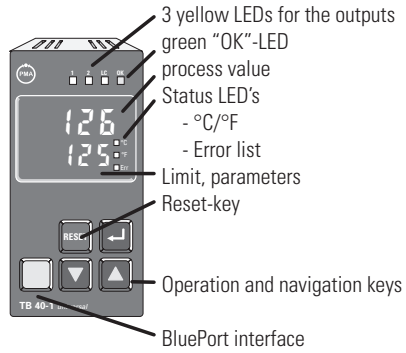


## POWER SUPPLY

Depending on version:

### AC SUPPLY

| | |
|---|---|
| Voltage: | 90...260 VAC |
| Frequency: | 48...62 Hz |
| Power consumption | approx. 7 VA |

### UNIVERSAL SUPPLY 24 V UC

| | |
|---|---|
| AC voltage: | 20,4...26,4 VAC |
| Frequency: | 48...62 Hz |
| DC voltage: | 18...31 V DC |
| Power consumption: | approx: 7 VA (W) |

### BEHAVIOUR WITH POWER FAILURE

Configuration, parameters, and adjusted limits:
Non-volatile storage in EEPROM

## BLUEPORT FRONT INTERFACE

Connection of PC via PC adapter (see „Accessories"). The BlueControl software is used to configure, set parameters, and operate the TB 40-1.

## ENVIRONMENTAL CONDITIONS

### Protection modes

| | |
|---|---|
| Front panel: | IP 65 (NEMA 4X) |
| Housing: | IP 20 |
| Terminals: | IP 00 |

### Permissible temperatures

| | |
|---|---|
| For specified accuracy: | 0...60°C |
| Warm-up time: | < 15 minutes |
| For operation: | -20...65°C |
| For storage: | -40...70°C |

### Humidity

75% yearly average, no condensation

### Shock and vibration

*Vibration test Fc (DIN 68-2-6)*

| | |
|---|---|
| Frequency: | 10...150 Hz |
| Unit in operation: | 1g or 0,075 mm |
| Unit not in operation: | 2g or 0,15 mm |

*Shock test Ea (DIN IEC 68-2-27)*

| | |
|---|---|
| Shock: | 15g |
| Duration: | 11ms |

### Electromagnetic compatibility

Complies with EN 61 326-1
(for continuous, unattended operation)

*HF interference on leads (EN 61000-4-6):*

Class B, Effect ≤ 0,5%

## GENERAL

### Housing

| | |
|---|---|
| Material: | Makrolon 9415, flame-retardant |
| Flammability class: | UL 94 VO, self-extinguishing |

Plug-in module, inserted from the front

### Safety tests

Complies with EN 61010-1 (VDE 0411-1):
Over voltage category II
Contamination class 2
Working voltage range 300 VAC
Protection class II

### Certifications

*Type tested to EN 14597 (replaces DIN 3440)*

With certified sensors applicable for:

- Heat generating plants with outflow temperatures up to 120°C to DIN 4751
- Hot-water plants with outflow temperatures above 110°C to DIN 4752
- Thermal transfer plants with organic transfer media to DIN 4754
- Oil-heated plants to DIN 4755

*cULus-certification*

(Type 1, indoor use)
File: E 208286

### Electrical connections

Flat-pin connectors 1 x 6,3 mm or
2 x 2,8 mm to DIN 46 244

### Mounting

Panel mounting with two fixing clamps at top/bottom or left/right
Close mounting possible

| | |
|---|---|
| Mounting position: | not critical |
| Weight: | 0,27 kg (9.52 oz) |

### Accessories supplied with unit

Operating instructions
2 fixing clamps

## ACCESSORY EQUIPMENT

***BlueControl (Engineering Tool)***

PC-based program for configuring, setting parameters, and operating (commissioning) the TB 40-1 temperature limiter. Moreover, all the settings are saved, and can be printed on demand.
Depending on version, a powerful data acquisition module is available, complete with trend graphics.
Software requirements:
Windows 95/98/NT/2000.
The built-in simulation serves to test the settings.

*Configurations that can only be implemented via the BlueControl software (not via the front-panel keys):*

- Customer-specific linearizations
- Adjustment of limits for operating hours and switching cycles
- Switch-over to 60 Hz mains frequency
- Disable operator actions and operating levels, plus password definition

*Hardware requirements:*

A PC adapter (see „Accessories“) is required for connecting the controller.

Updates and demo software can be downloaded from:
www.pma-online.de

## ORDERING INFORMATION

TB40-1 - 000 -

| | |
|---|---|
| Flat pin connectors | 0 |
| Screw terminal connectors | 1 |
| 90..250V AC, 3 relays | 0 |
| 24VAC / 18..30VDC, 3 relays | 1 |
| Standard configuration | 0 |
| Configuration to specification | 9 |
| No manual | 0 |
| Manual german | D |
| Manual english | E |
| Manual french | F |
| Standard (CE-certified) | 0 |
| cULus certified (with screw terminal only) | U |
| EN 14597 (replaces DIN 3440) certified | D |
| Standard version | 00 |
| Customer specification | .. |

## ACCESSORIES

| Description | | Order no. |
|---|---|---|
| PC adapter, for connecting BlueControl software to the BluePort | | 9407-998-00001 |
| Standard rail adapter | | 9407-998-00061 |
| Operating manual | german | 9499-040-63418 |
| Operating manual | english | 9499-040-63411 |
| Operating manual | french | 9499-040-63432 |
| BlueControl Mini | german/english/french | www.pma-online.de |
| BlueControl Basic | german/english/french | 9407-999-11001 |
| BlueControl Expert | german/english/french | 9407-999-11011 |

**PMA**
Prozeß- und Maschinen- Automation GmbH
P.O. Box 31 02 29
D-34058 Kassel
Tel.: +49 - 561- 505 1307
Fax: +49 - 561- 505 1710
E-mail: mailbox@pma-online.de
Internet: http://www.pma-online.de

**Your local representative:**

Printed in Germany - Edition 05/2009 - Subject to change without notice - 9498 737 40413