I85003

Inductive tube sensor

I8-3014-ANKG/0,09M/US-100-DNS

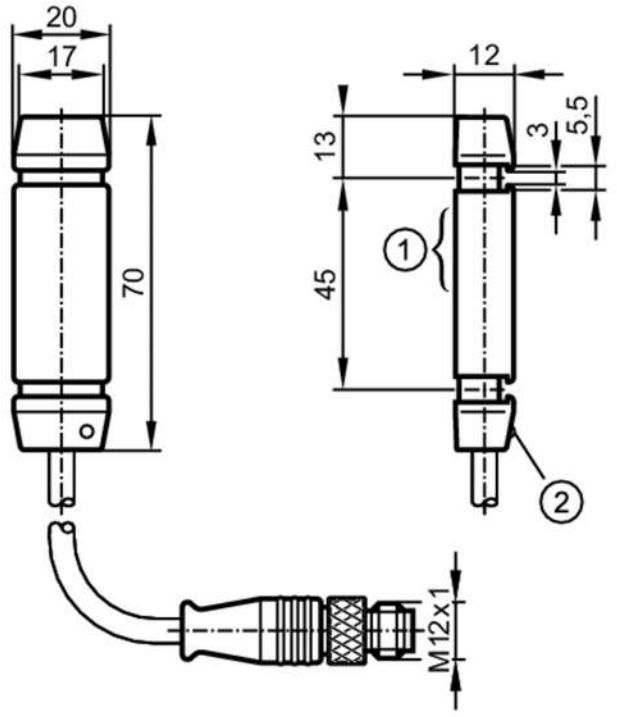

1 Sensing face
2 LED operating status

Product characteristics		
Electrical design		NPN
Output function		normally open
Sensing range	[mm]	< 14
Housing		rectangular
Dimensions	[mm]	70 x 20 x 12
Application		
Operating principle		static
Electrical data		
Operating voltage	[V]	10...35 DC
Current consumption	[mA]	< 15
Protection class		III
Reverse polarity protection		yes
Outputs		
Electrical design		NPN
Output function		normally open
Max. voltage drop switching output DC	[V]	2
Permanent current rating of switching output DC	[mA]	200
Short-circuit protection		yes
Overload protection		yes

I85003

Inductive tube sensor

I8-3014-ANKG/0,09M/US-100-DNS

Detection zone			
Sensing range	[mm]	< 14	
Resolution of steel ball (diameter)	[mm]	3	
Max. part speed	[m/s]	35	
Response times			
Pulse stretching	[ms]	100	
Max. fall time	[ms]	100	
Response time	[ms]	< 0.5	
Operating conditions			
Ambient temperature	[°C]	-25...70	
Protection		IP 67	
Tests / approvals			
MTTF	[years]	1323	
UL approval		Ta	-25...70 °C
		Enclosure type	Type 4X (indoor use only) / 12 and 13
		power supply	Class 2
		File number UL	E174191
Mechanical data			
Weight	[g]	59.5	
Housing		rectangular	
Dimensions	[mm]	70 x 20 x 12	
Materials		housing: PC	
Displays / operating elements			
Display		switching status	1 x LED, yellow
		operation	1 x LED, green
Accessories			
Items supplied		fixing straps: 2	
Remarks			
Pack quantity		1 pcs.	

Electrical connection - plug

Cable: 0.09 m, PUR

Connector: 1 x M12; coding: A



I85003

Inductive tube sensor

I8-3014-ANKG/0,09M/US-100-DNS

Connection

