11SN1

SINGLE POLE ELECTRODE, 100MM/3,94”



Product designation				Probe
Product type designation				SN1
Function				Single probe for level control in wells or storage tanks. With AISI 303 stainless steel electrode, plastic (PPOX) holder and cable gland. Screw cable connection (section max 2.5mm2). Max temperature 60°C.
Connections				
Terminals type				Screw
Conductor cross section				
	IEC			
		Max	mm²	2.5
Ambient conditions				
Temperature				
	Operating temperature			
		max	°C	+60
Housing				
Weight			g	50
Dimensions				

The characteristics described in this document are subject to updates or modifications at any time. The descriptions, technical and functional information, illustrations and instructions in this brochure are purely illustrative, and are consequently not contractually binding

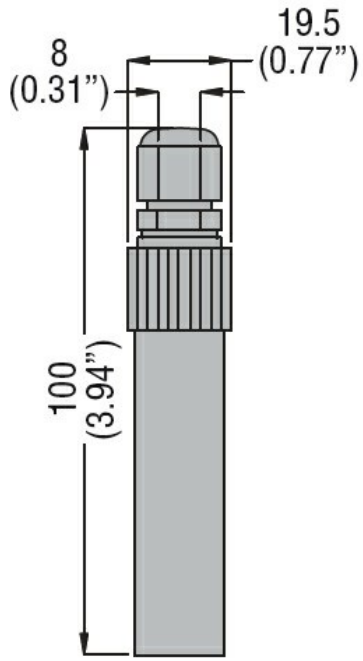

Certifications and compliance

Compliance

/

Certificates

EAC

The characteristics described in this document are subject to updates or modifications at any time. The descriptions, technical and functional information, illustrations and instructions in this brochure are purely illustrative, and are consequently not contractually binding