EZ-LIGHT® K50L Sealed Audible Indicators

Datasheet

For the latest technical information about this product, including specifications, dimensions, and wiring, see *www.bannerengineering.com*.



- Rugged, cost-effective, and easy-to-install bright indicators with audible alarm
- Fully sealed and rated at IP67 or IP69K, depending on model
- Compact devices are completely self-contained - no controller needed
- Immune to EMI and RFI interference
- Loud audible alarm with intensity adjustment (IP67 models)
- 12 to 30 V dc operation
- Available in continuous and staccato tones (IP67 models)

Model	Environmental Rating	Connection	LED Function[1]	Audible Tone†	Input
Fixed Audible Sealed Models					
K50LGXASXPQ	IP69K	5-pin M12 QD	1 Color: Green	Fixed tone volume	PNP
K50LGRASXPQ			2 Color: Green, Red		
K50LGRASYPQ			3 Color: Green, Red, Yellow		
K50LGXASXNQ			1 Color: Green		NPN
K50LGRASXNQ			2 Color: Green, Red		
K50LGRASYNQ			3 Color: Green, Red, Yellow		
Adjustable Loud Audible Sealed Models					
K50LGXALSXPQ	IP67	5-pin M12 QD	1 Color: Green	Continuous tone with volume adjustment	PNP
K50LGRALSXPQ			2 Color: Green, Red		
K50LGRALSYPQ			3 Color: Green, Red, Yellow		
K50LGXALSXNQ			1 Color: Green		NPN
K50LGRALSXNQ			2 Color: Green, Red		
K50LGRALSYNQ			3 Color: Green, Red, Yellow		
K50LGXALS4XPQ			1 Color: Green	Staccato tone with volume adjustment	PNP
K50LGRALS4XPQ			2 Color: Green, Red		
K50LGRALS4YPQ			3 Color: Green, Red, Yellow		
K50LGXALS4XNQ			1 Color: Green		NPN
K50LGRALS4XNQ			2 Color: Green, Red		
K50LGRALS4YNQ			3 Color: Green, Red, Yellow		

Integral quick disconnect fitting models only are listed.

- To order the 150 mm (5.9 in) PVC cable with quick disconnect fitting model, replace "Q" with "QP" in the model number (example, K50LGXASXPQP).
- To order the 2 m (6.5 ft) cable model, omit suffix "Q" from the model number (example, K50LGXASXP).
- A model with a quick disconnect fitting requires a mating cable (see *5-Pin Euro-Style Cordsets* on page 3).

[1] Contact the factory for other colors and color combinations.

WARNING: Not To Be Used for Personnel Protection

Never use this device as a sensing device for personnel protection. Doing so could lead to serious injury or death. This device does not include the self-checking redundant circuitry necessary to allow its use in personnel safety applications. A sensor failure or malfunction can cause either an energized or de-energized sensor output condition.

Specifications

Supply Voltage and Current
- Operating voltage: 12 to 30 V dc
- Indicators (Maximum current per color) : 65 mA at 12 V dc; 35 mA at 30 V dc
- Audible: 35 mA maximum current

Supply Protection Circuitry
- Protected against reverse polarity and transient voltages

Input Response Time
- Indicator ON/OFF: 1 ms (max.)
- Audible ON/OFF: 10 ms (max.)

Audible Alarm
- IP67 Models: 2.9 kHz ± 250 Hz oscillation frequency; max. intensity 94 db at 1 m (3.3 ft) (typical)
- IP69K Models: 2.9 kHz ± 250 Hz oscillation frequency; max. intensity 65 db at 1 m (3.3) (typical)

Audible Adjustment
- Rotate the front cover until the desired intensity is achieved (IP67 models only)

Construction
- Fixed Audible Sealed Models: Polycarbonate housing and audible alarm
- Adjustable Loud Audible Sealed Models: Polycarbonate housing and PPO audible alarm

Vibration and Mechanical Shock
- All models meet Mil. Std. 202F requirements method 201A (vibration: 10 to 60 Hz max., double amplitude 0.06", maximum acceleration 10G). Also meets IEC 947-5-2; 30G 11 ms duration, half sine wave.

Environmental Rating
- Fixed Audible Sealed Models: IEC IP67 / IP69K per DIN 40050-9
- Adjustable Loud Audible Sealed Models: IEC IP67

Connections
- Integral 5-pin M12 quick disconnect fitting or 2 m (6.5 ft) integral cable, depending on model

Operating Conditions
- –20 °C to +50 °C (–4 °F to +122 °F)
- 95% maximum relative humidity (non-condensing)

Certifications

PNP Models: c UL us LISTED

NPN Models: Pending approval

Dimensions

Cabled Dimensions

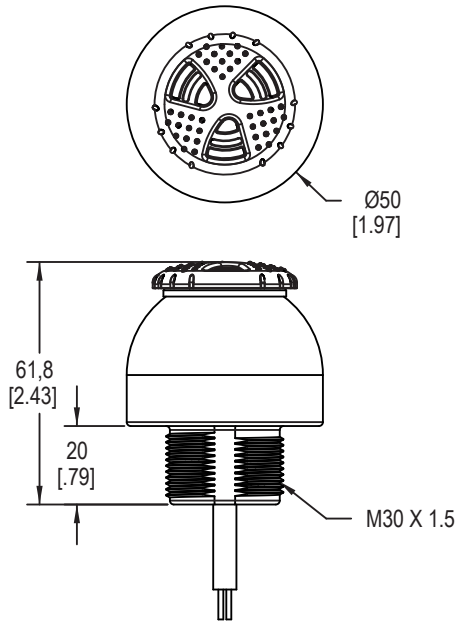

QD Dimensions

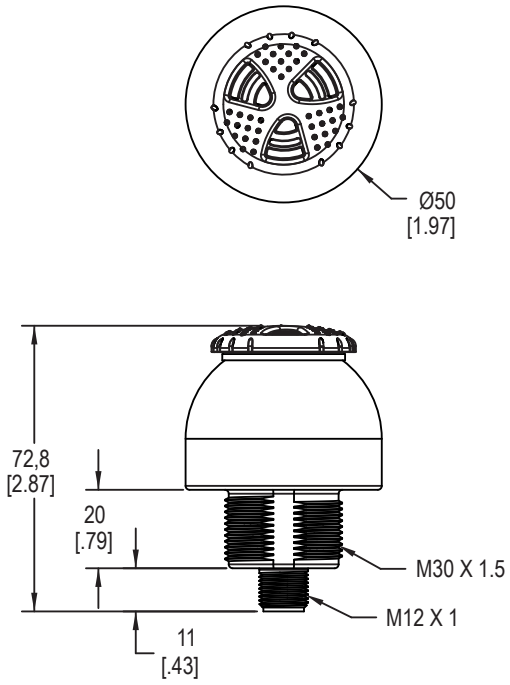

Installation in Very Wet Environments

For best sound quality and volume when mounting an IP67 audible indicator model in an extremely wet environment, consider the mounting orientation. Mount the indicator horizontally or facing downward to allow water to drain easily. Upright mounting will allow water to collect in the alarm cavity, which will muffle the sound.

Wiring

PNP (Sourcing)	NPN (Sinking)	Key:

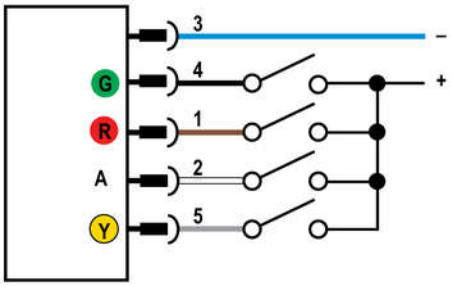

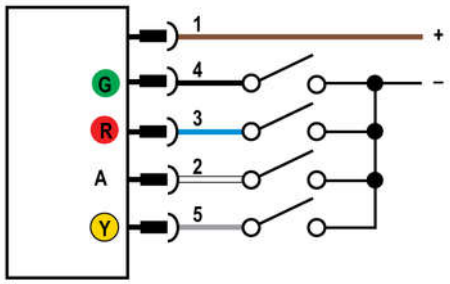

1 = Brown
2 = White
3 = Blue
4 = Black
5 = Gray

G = Green LED
R = Red LED
Y = Yellow LED
A = Alarm

NOTE: When fewer than three LED colors are used, the corresponding wires are unused.

Accessories

5-Pin Euro-Style Cordsets

5-Pin Threaded M12/Euro-Style Cordsets (Single Ended)				
Model	Length	Style	Dimensions	Pinout (Female)
MQDC1-501.5	0.50 m (1.5 ft)	Straight	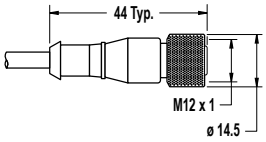	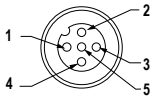 1 = Brown 2 = White 3 = Blue 4 = Black 5 = Gray
MQDC1-506	1.83 m (6 ft)			
MQDC1-515	4.57 m (15 ft)			
MQDC1-530	9.14 m (30 ft)			
MQDC1-506RA	1.83 m (6 ft)	Right-Angle	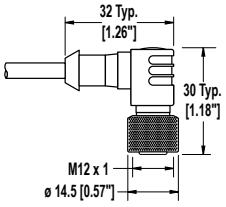	
MQDC1-515RA	4.57 m (15 ft)			
MQDC1-530RA	9.14 m (30 ft)			

Mounting Brackets

SMB30A

- Right-angle bracket with curved slot for versatile orientation
- Clearance for M6 (¼ in) hardware
- Mounting hole for 30 mm sensor
- 12-ga. stainless steel

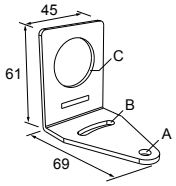

Hole center spacing: A to B=40
Hole size: A=ø 6.3, B= 27.1 x 6.3, C=ø 30.5

SMB30FA

- Swivel bracket with tilt and pan movement for precise adjustment
- Mounting hole for 30 mm sensor
- 12-ga. 304 stainless steel
- Easy sensor mounting to extrude rail T-slot
- Metric and inch size bolt available

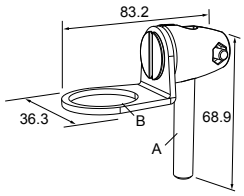

Bolt thread: SMB30FA, A= 3/8 - 16 x 2 in; SMB30FAM10, A= M10 - 1.5 x 50
Hole size: B= ø 30.1

SMB30MM

- 12-ga. stainless steel bracket with curved mounting slots for versatile orientation
- Clearance for M6 (¼ in) hardware
- Mounting hole for 30 mm sensor

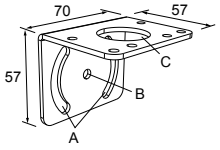

Hole center spacing: A = 51, A to B = 25.4
Hole size: A = 42.6 x 7, B = ø 6.4, C = ø 30.1

SMB30SC

- Swivel bracket with 30 mm mounting hole for sensor
- Black reinforced thermoplastic polyester
- Stainless steel mounting and swivel locking hardware included

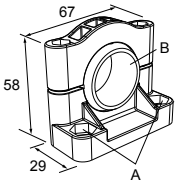

Hole center spacing: A=ø 50.8
Hole size: A=ø 7.0, B=ø 30.0

SMB30SK

- Flat-mount swivel bracket with extended range of motion
- Black reinforced thermoplastic polyester and 316 stainless steel
- Stainless steel swivel locking hardware included

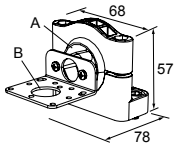

Hole center spacing: A = 50.8
Hole size: A = ø 7, B = ø 18

Elevated Mount System

Model			Features	Components
SA-M30E12 - Black Acetal			• Streamlined black acetal stand-off pipe adapter/cover • Connects between 30 mm light base and ½ in. NPSM/DN15 pipe • Mounting hardware included	
Polished 304 Stainless Steel	Black Anodized Aluminum	Clear Anodized Aluminum	• Elevated-use stand-off pipe (½ in. NPSM/ DN15) • Polished 304 stainless steel, black anodized aluminum, or clear anodized aluminum surface • ½ in. NPT thread at both ends • Compatible with most industrial environments	
SOP-E12-150SS 150 mm (6 in) long	SOP-E12-150A 150 mm (6 in) long	SOP-E12-150AC 150 mm (6 in) long		
SOP-E12-300SS 300 mm (12 in) long	SOP-E12-300A 300 mm (12 in) long	SOP-E12-300AC 300 mm (12 in) long		
SOP-E12-900SS 900 mm (36 in) long	SOP-E12-900A 900 mm (36 in) long	SOP-E12-900AC 900 mm (36 in) long		
SA-E12M30 - Black Acetal			• Streamlined black acetal mounting base adapter/cover • Connects between ½ in. NPSM/DN15 pipe and 30 mm (1-3/16 in) drilled hole • Mounting hardware included	

Banner Engineering Corp. Limited Warranty

Banner Engineering Corp. warrants its products to be free from defects in material and workmanship for one year following the date of shipment. Banner Engineering Corp. will repair or replace, free of charge, any product of its manufacture which, at the time it is returned to the factory, is found to have been defective during the warranty period. This warranty does not cover damage or liability for misuse, abuse, or the improper application or installation of the Banner product.

THIS LIMITED WARRANTY IS EXCLUSIVE AND IN LIEU OF ALL OTHER WARRANTIES WHETHER EXPRESS OR IMPLIED (INCLUDING, WITHOUT LIMITATION, ANY WARRANTY OF MERCHANTABILITY OR FITNESS FOR A PARTICULAR PURPOSE), AND WHETHER ARISING UNDER COURSE OF PERFORMANCE, COURSE OF DEALING OR TRADE USAGE.

This Warranty is exclusive and limited to repair or, at the discretion of Banner Engineering Corp., replacement. IN NO EVENT SHALL BANNER ENGINEERING CORP. BE LIABLE TO BUYER OR ANY OTHER PERSON OR ENTITY FOR ANY EXTRA COSTS, EXPENSES, LOSSES, LOSS OF PROFITS, OR ANY INCIDENTAL, CONSEQUENTIAL OR SPECIAL DAMAGES RESULTING FROM ANY PRODUCT DEFECT OR FROM THE USE OR INABILITY TO USE THE PRODUCT, WHETHER ARISING IN CONTRACT OR WARRANTY, STATUTE, TORT, STRICT LIABILITY, NEGLIGENCE, OR OTHERWISE.

Banner Engineering Corp. reserves the right to change, modify or improve the design of the product without assuming any obligations or liabilities relating to any product previously manufactured by Banner Engineering Corp.