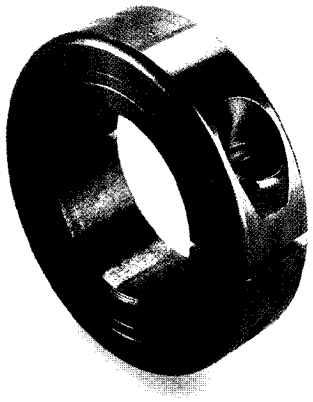

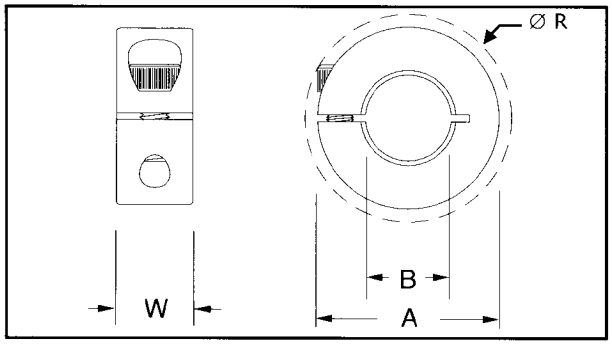

PART NO. STEEL	PART NO. ALUMINIUM	PART NO. STAINLESS STEEL	Ø B	Ø A	Ø R	W	DIN 912
MCL-3-F	MCL-3-A	MCL-3-SS	3	16	20,7	9	M3x8
MCL-4-F	MCL-4-A	MCL-4-SS	4	16	20,7	9	M3x8
MCL-5-F	MCL-5-A	MCL-5-SS	5	16	20,7	9	M3x8
MCL-6-F	MCL-6-A	MCL-6-SS	6	16	20,7	9	M3x8
MCL-7-F	MCL-7-A	MCL-7-SS	7	18	22,4	9	M3x8
MCL-8-F	MCL-8-A	MCL-8-SS	8	18	22,4	9	M3x8
MCL-9-F	MCL-9-A	MCL-9-SS	9	24	26,0	9	M3x10
MCL-10-F	MCL-10-A	MCL-10-SS	10	24	26,0	9	M3x10
MCL-11-F	MCL-11-A	MCL-11-SS	11	28	31,8	11	M4x12
MCL-12-F	MCL-12-A	MCL-12-SS	12	28	31,8	11	M4x12
MCL-13-F	MCL-13-A	MCL-13-SS	13	30	33,9	11	M4x14
MCL-14-F	MCL-14-A	MCL-14-SS	14	30	33,9	11	M4x14
MCL-15-F	MCL-15-A	MCL-15-SS	15	34	39,4	13	M5x16
MCL-16-F	MCL-16-A	MCL-16-SS	16	34	39,4	13	M5x16
MCL-17-F	MCL-17-A	MCL-17-SS	17	36	41,1	13	M5x16
MCL-18-F	MCL-18-A	MCL-18-SS	18	36	41,1	13	M5x16
MCL-19-F	MCL-19-A	MCL-19-SS	19	40	46,4	15	M6x16
MCL-20-F	MCL-20-A	MCL-20-SS	20	40	46,4	15	M6x16
MCL-21-F	MCL-21-A	MCL-21-SS	21	42	48,1	15	M6x16
MCL-22-F	MCL-22-A	MCL-22-SS	22	42	48,1	15	M6x16
MCL-23-F	MCL-23-A	MCL-23-SS	23	45	50,8	15	M6x16
MCL-24-F	MCL-24-A	MCL-24-SS	24	45	50,8	15	M6x16
MCL-25-F	MCL-25-A	MCL-25-SS	25	45	50,8	15	M6x16
MCL-26-F	MCL-26-A	MCL-26-SS	26	48	53,5	15	M6x16
MCL-28-F	MCL-28-A	MCL-28-SS	28	48	53,5	15	M6x16
MCL-30-F	MCL-30-A	MCL-30-SS	30	54	58,4	15	M6x18
MCL-32-F	MCL-32-A	MCL-32-SS	32	54	58,4	15	M6x18
MCL-34-F	MCL-34-A	MCL-34-SS	34	57	61,6	15	M6x18
MCL-35-F	MCL-35-A	MCL-35-SS	35	57	61,6	15	M6x18
MCL-36-F	MCL-36-A	MCL-36-SS	36	57	61,6	15	M6x18
MCL-38-F	MCL-38-A	MCL-38-SS	38	60	64,8	15	M6x18
MCL-40-F	MCL-40-A	MCL-40-SS	40	60	64,8	15	M6x18
MCL-42-F	MCL-42-A	MCL-42-SS	42	73	79,4	19	M8x25
MCL-45-F	MCL-45-A	MCL-45-SS	45	73	79,4	19	M8x25
MCL-48-F	MCL-48-A	MCL-48-SS	48	78	83,9	19	M8x25
MCL-50-F	MCL-50-A	MCL-50-SS	50	78	83,9	19	M8x25
MCL-54-F		MCL-54-SS	54	82	88,1	19	M8x25
MCL-55-F		MCL-55-SS	55	82	88,1	19	M8x25
MCL-60-F		MCL-60-SS	60	88	93,2	19	M8x25
MCL-65-F		MCL-65-SS	65	93	97,9	19	M8x25
MCL-70-F		MCL-70-SS	70	98	102,6	19	M8x25
MCL-75-F		MCL-75-SS	75	103	107,3	19	M8x25
MCL-80-F		MCL-80-SS	80	108	112,1	19	M8x25

NOTE: Sizes MCL-40 through MCL-80 do not have backslot.

All dimensions are in millimeters.

For warranty/disclaimer information see page 13.

- Does not mar the shaft
- Even distribution of clamping forces on the shaft for greater axial load capacity than set screw collars
- Easily repositioned
- Face perpendicular to shaft for proper component alignment
- Threaded bores, balanced collars and special dimensions are also available
- Width tolerance: +0,08mm
  -0,25mm

PART NO. STEEL	PART NO. ALUMINIUM	PART NO. STAINLESS STEEL	∅ B	∅ A	∅ R	W	DIN 912
MSP-3-F	MSP-3-A	MSP-3-SS	3	16	20,7	9	M3x8
MSP-4-F	MSP-4-A	MSP-4-SS	4	16	20,7	9	M3x8
MSP-5-F	MSP-5-A	MSP-5-SS	5	16	20,7	9	M3x8
MSP-6-F	MSP-6-A	MSP-6-SS	6	16	20,7	9	M3x8
MSP-7-F	MSP-7-A	MSP-7-SS	7	18	22,4	9	M3x8
MSP-8-F	MSP-8-A	MSP-8-SS	8	18	22,4	9	M3x8
MSP-9-F	MSP-9-A	MSP-9-SS	9	24	26,0	9	M3x10
MSP-10-F	MSP-10-A	MSP-10-SS	10	24	26,0	9	M3x10
MSP-11-F	MSP-11-A	MSP-11-SS	11	28	31,8	11	M4x12
MSP-12-F	MSP-12-A	MSP-12-SS	12	28	31,8	11	M4x12
MSP-13-F	MSP-13-A	MSP-13-SS	13	30	33,9	11	M4x14
MSP-14-F	MSP-14-A	MSP-14-SS	14	30	33,9	11	M4x14
MSP-15-F	MSP-15-A	MSP-15-SS	15	34	39,4	13	M5x16
MSP-16-F	MSP-16-A	MSP-16-SS	16	34	39,4	13	M5x16
MSP-17-F	MSP-17-A	MSP-17-SS	17	36	41,1	13	M5x16
MSP-18-F	MSP-18-A	MSP-18-SS	18	36	41,1	13	M5x16
MSP-19-F	MSP-19-A	MSP-19-SS	19	40	46,4	15	M6x16
MSP-20-F	MSP-20-A	MSP-20-SS	20	40	46,4	15	M6x16
MSP-21-F	MSP-21-A	MSP-21-SS	21	42	48,1	15	M6x16
MSP-22-F	MSP-22-A	MSP-22-SS	22	42	48,1	15	M6x16
MSP-23-F	MSP-23-A	MSP-23-SS	23	45	50,8	15	M6x16
MSP-24-F	MSP-24-A	MSP-24-SS	24	45	50,8	15	M6x16
MSP-25-F	MSP-25-A	MSP-25-SS	25	45	50,8	15	M6x16
MSP-26-F	MSP-26-A	MSP-26-SS	26	48	53,5	15	M6x16
MSP-28-F	MSP-28-A	MSP-28-SS	28	48	53,5	15	M6x16
MSP-30-F	MSP-30-A	MSP-30-SS	30	54	58,4	15	M6x18
MSP-32-F	MSP-32-A	MSP-32-SS	32	54	58,4	15	M6x18
MSP-34-F	MSP-34-A	MSP-34-SS	34	57	61,6	15	M6x18
MSP-35-F	MSP-35-A	MSP-35-SS	35	57	61,6	15	M6x18
MSP-36-F	MSP-36-A	MSP-36-SS	36	57	61,6	15	M6x18
MSP-38-F	MSP-38-A	MSP-38-SS	38	60	64,8	15	M6x18
MSP-40-F	MSP-40-A	MSP-40-SS	40	60	64,8	15	M6x18
MSP-42-F	MSP-42-A	MSP-42-SS	42	73	79,4	19	M8x25
MSP-45-F	MSP-45-A	MSP-45-SS	45	73	79,4	19	M8x25
MSP-48-F	MSP-48-A	MSP-48-SS	48	78	83,9	19	M8x25
MSP-50-F	MSP-50-A	MSP-50-SS	50	78	83,9	19	M8x25
MSP-54-F		MSP-54-SS	54	82	88,1	19	M8x25
MSP-55-F		MSP-55-SS	55	82	88,1	19	M8x25
MSP-60-F		MSP-60-SS	60	88	93,2	19	M8x25
MSP-65-F		MSP-65-SS	65	93	97,9	19	M8x25
MSP-70-F		MSP-70-SS	70	98	102,6	19	M8x25
MSP-75-F		MSP-75-SS	75	103	107,3	19	M8x25
MSP-80-F		MSP-80-SS	80	108	112,1	19	M8x25

All dimensions are in millimeters.

For warranty/disclaimer information see page 13.

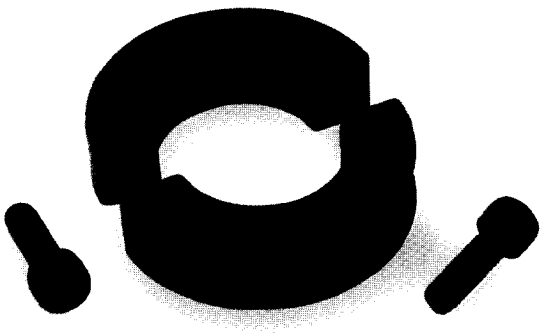

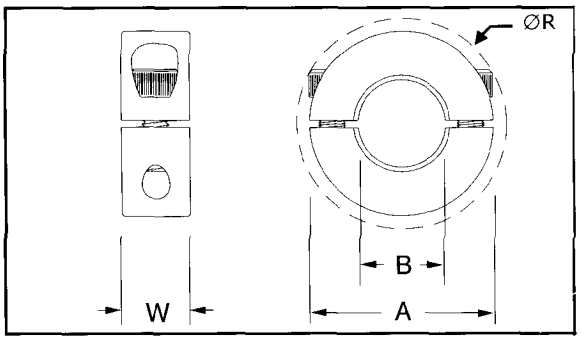

- Does not mar the shaft
- Greater axial load capacity than set screw collars or one-piece clamp collars
- Easily disassembled and repositioned
- Adaptable to slightly under- or over-sized shafts
- Face perpendicular to shaft for proper component alignment
- Keyways, balanced collars, and special dimensions available
- Width tolerance: +0,08mm -0,25mm

MSC

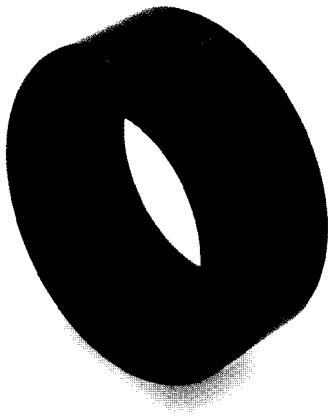

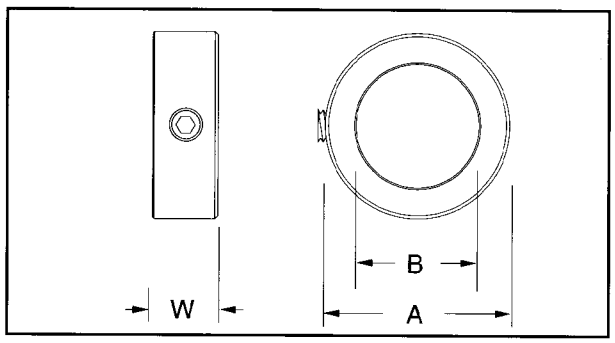

PART NO. STEEL	PART NO. STAINLESS STEEL	∅ B	∅ A	W	DIN 916
MSC-4-F	MSC-4-SS	4	8	5	M2,5x3
MSC-5-F	MSC-5-SS	5	10	6	M3x4
MSC-6-F	MSC-6-SS	6	12	8	M4x4
MSC-8-F	MSC-8-SS	8	16	8	M4x4
MSC-10-F	MSC-10-SS	10	20	10	M5x5
MSC-12-F	MSC-12-SS	12	22	12	M6x6
MSC-14-F	MSC-14-SS	14	25	12	M6x6
MSC-15-F	MSC-15-SS	15	25	12	M6x6
MSC-16-F	MSC-16-SS	16	28	12	M6x8
MSC-18-F	MSC-18-SS	18	32	14	M6x8
MSC-20-F	MSC-20-SS	20	32	14	M6x8
MSC-22-F	MSC-22-SS	22	36	14	M6x8
MSC-25-F	MSC-25-SS	25	40	16	M8x8
MSC-28-F	MSC-28-SS	28	45	16	M8x10
MSC-30-F	MSC-30-SS	30	45	16	M8x8
MSC-32-F	MSC-32-SS	32	50	16	M8x10
MSC-35-F	MSC-35-SS	35	56	16	M8x12
MSC-38-F	MSC-38-SS	38	56	16	M8x10
MSC-40-F	MSC-40-SS	40	63	18	M10x12
MSC-45-F	MSC-45-SS	45	70	18	M10x12
MSC-50-F	MSC-50-SS	50	80	18	M10x16

All dimensions are in millimeters.

For warranty/disclaimer information see page 13.

- Forged socket DIN 916 screw for greater torque capacity
- Most effective on soft shafts
- Most economical collar offered
- Bore tolerance: +0,01mm
  +0,05mm
- Width tolerance: +0,08mm
  -0,25mm

- Ideal for precision applications
- Two sets of two spiral cuts for high torque capability and torsional stiffness
- Compact design
- Lightest bearing load
- Zero-backlash
- Accommodates angular, parallel, axial and complex misalignment
- Clamp style hardware configured for dynamic balancing

MWC

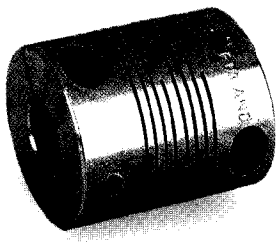

MWS

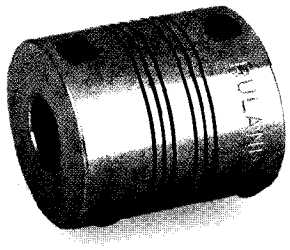

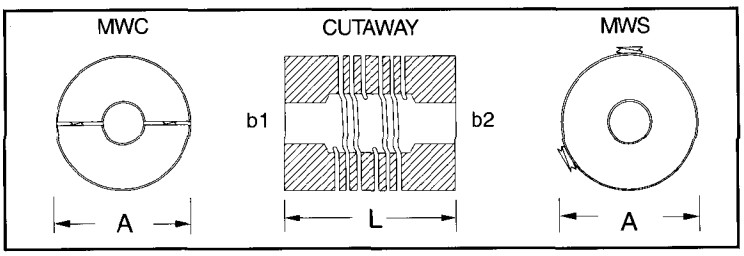

PART NUMBER				SPECIFICATIONS					PERFORMANCE				
CLAMP STYLE	SET SCREW STYLE	∅ BORE b1	∅ BORE b2	∅ A	L (MWC)	L (MWS)	DIN 912[3] (MWC)	DIN 916[3] (MWS)	STATIC TORQUE[2] (Nm)	TORSIONAL STIFFNESS[2] (Nm/rad)	MISALIGNMENT ANGULAR (Deg)	MISALIGNMENT PARALLEL (mm)	MISALIGNMENT AXIAL (mm)
		3	3						0,85	12,9			
		3,18	3,18						0,85	12,9			
MWC15	MWS15	4	4	15	22	20	M2	M3	0,85	12,9	3°	0,20	0,12
		4,76	4,76						0,81	11,0			
		5	5						0,81	11,0			
		4	4						1,30	28,5			
MWC20	MWS20	4,76	4,76	20	28	20	M3	M3	1,30	28,5	3°	0,20	0,12
		5	5						1,30	28,5			
		6	6						1,15	23,1			
		6	6						3,42	47,0			
		6,35	6,35						3,42	47,0			
MWC25	MWS25	8	8	25	30	24	M3	M4	3,42	47,0	3°	0,38	0,25
		9,53	9,53						3,10	32,8			
		10	10						3,10	32,8			
		8	8						6,90	80,7			
		9,53	9,53						6,90	80,7			
MWC30	MWS30	10	10	30	38	30	M4	M5	6,90	80,7	3°	0,38	0,25
		12	12						6,60	61,6			
		12,70	12,70						6,60	61,6			

For warranty/disclaimer information see page 13.

Note 1 All dimensions are in millimeters unless otherwise specified on chart.

Note 2 Ratings are at maximum misalignment. To obtain dynamic rating, static torque ratings should be divided by 2 for non-reversing applications and by 4 for reversing applications.

Note 3 Screws are alloy steel with black oxide finish. See Page 12 for specifications.

Note 4 Shafts may penetrate into the inner chamber of the couplings. Space must be maintained between shafts to allow flexing.

Choose any bore ***b1*** and any bore ***b2*** available in a body size. Part numbers are in the following format with numbers representing millimeters:

15 mm Body 4 mm Bore

Clamp Style → **MWC15 - 5 - 4 - A**

5mm Bore Aluminium

MWC MWS

RULAND

MWC

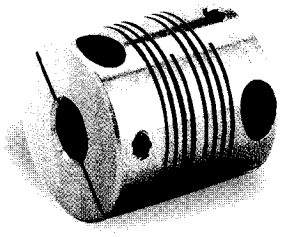

MWS

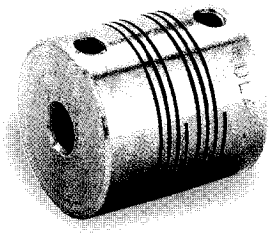

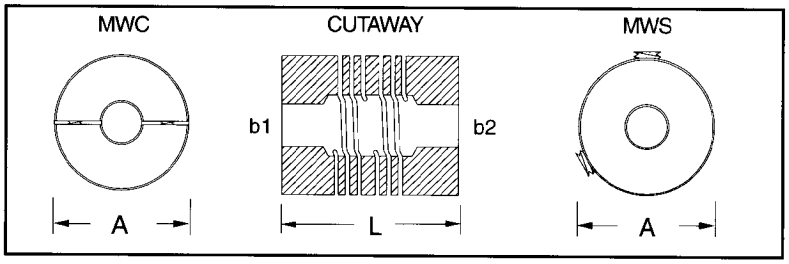

- Greater torque capability and stiffness than aluminium couplings
- Two sets of two spiral cuts and high strength stainless steel for high torque capability and torsional stiffness
- Lighter bearing load than stainless MF series
- Corrosion resistant
- Zero-backlash
- Accommodates angular, parallel, axial and complex misalignment
- Clamp style hardware configured for dynamic balancing

PART NUMBER				SPECIFICATIONS					PERFORMANCE				
CLAMP STYLE	SET SCREW STYLE	∅ BORE b1	∅ BORE b2	∅ A	L (MWC)	L (MWS)	DIN 912[3] (MWC)	DIN 916[3] (MWS)	STATIC TORQUE[2] (Nm)	TORSIONAL STIFFNESS[2] (Nm/rad)	MISALIGNMENT ANGULAR (Deg)	MISALIGNMENT PARALLEL (mm)	MISALIGNMENT AXIAL (mm)
		3	3						1,30	25,7			
		3,18	3,18						1,30	25,7			
MWC15	MWS15	4	4	15	22	20	M2	M3	1,30	25,7	3°	0,20	0,12
		4,76	4,76						1,20	22,7			
		5	5						1,20	22,7			
		4	4						2,00	58,5			
MWC20	MWS20	4,76	4,76	20	28	20	M3	M3	2,00	58,5	3°	0,20	0,12
		5	5						2,00	58,5			
		6	6						1,70	44,4			
		6	6						5,10	98,8			
		6,35	6,35						5,10	98,8			
MWC25	MWS25	8	8	25	30	24	M3	M4	5,10	98,8	3°	0,38	0,25
		9,53	9,53						4,60	69,1			
		10	10						4,60	69,1			
		8	8						10,40	173,6			
		9,53	9,53						10,40	173,6			
MWC30	MWS30	10	10	30	38	30	M4	M5	10,40	173,6	3°	0,38	0,25
		12	12						10,00	124,6			
		12,70	12,70						10,00	124,6			

For warranty/disclaimer information see page 13.

Note 1 All dimensions are in millimeters unless otherwise specified on chart.

Note 2 Ratings are at maximum misalignment. To obtain dynamic rating, static torque ratings should be divided by 2 for non-reversing applications and by 4 for reversing applications.

Note 3 Screws are alloy steel with black oxide finish. See Page 12 for specifications.

Note 4 Shafts may penetrate into the inner chamber of the couplings. Space must be maintained between shafts to allow flexing.

Choose any bore ***b1*** and any bore ***b2*** available in a body size. Part numbers are in the following format with numbers representing millimeters:

15 mm Body 4 mm Bore

Clamp Style → **MWC15 - 5 - 4 - SS**

5mm Bore Stainless Steel

- Ideal for light duty power transmission applications
- Two sets of three spiral cuts for high torque capability and torsional stiffness
- Greater torque capability and stiffness than MW aluminium series
- Zero-backlash
- Accommodates angular, parallel, axial and complex misalignment
- Clamp style hardware configured for dynamic balancing

MFC

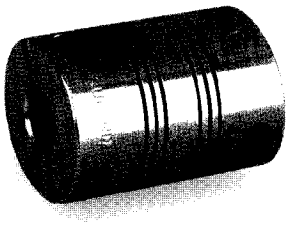

MFS

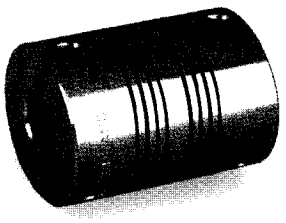

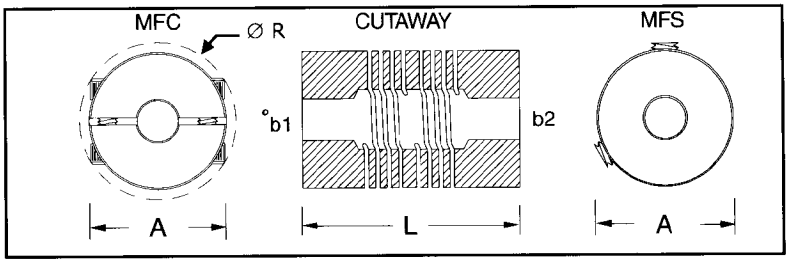

PART NUMBER				SPECIFICATIONS					PERFORMANCE				
CLAMP STYLE	SET SCREW STYLE	Ø BORE b1	Ø BORE b2	Ø A	R (MFC)	L	DIN 912[3] (MFC)	DIN 916[3] (MFS)	STATIC TORQUE[2] (Nm)	TORSIONAL STIFFNESS[2] (Nm/rad)	MISALIGNMENT ANGULAR (Deg)	MISALIGNMENT PARALLEL (mm)	MISALIGNMENT AXIAL (mm)
MFC20	MFS20	5	5	20	22,8	30	M3	M4	2,90	43,1	3°	0,20	0,12
		6	6						2,90	43,1			
		6,35	6,35						2,70	34,3			
		8	8						2,30	28,1			
MFC25	MFS25	6	6	25	30,2	40	M4	M5	4,00	104,2	3°	0,38	0,25
		6,35	6,35						4,00	104,2			
		8	8						3,70	66,6			
		9,53	9,53						3,70	66,6			
		10	10						3,70	66,6			
		12	12						2,80	36,5			
		12,70	12,70						2,80	36,5			
MFC30	MFS30	8	8	30	34,9	45	M5	M6	7,30	168,5	3°	0,38	0,25
		9,53	9,53						6,30	133,3			
		10	10						6,30	133,3			
		12	12						5,10	83,1			
		12,70	12,70						4,70	74,4			
		14	14						4,70	74,4			
MFC40	MFS40	10	10	40	45,6	55	M6	M6	12,40	238,7	3°	0,76	0,38
		12	12						12,40	238,7			
		12,70	12,70						10,70	146,9			
		14	14						10,70	146,9			
		16	16						10,70	146,9			

For warranty/disclaimer information see page 13.

Note 1 All dimensions are in millimeters unless otherwise specified on chart.

Note 2 Ratings are at maximum misalignment. To obtain dynamic rating, static torque ratings should be divided by 2 for non-reversing applications and by 4 for reversing applications.

Note 3 Screws are alloy steel with black oxide finish. See Page 12 for specifications.

Note 4 Shafts may penetrate into the inner chamber of the couplings. Space must be maintained between shafts to allow flexing.

Choose any bore ***b1*** and any bore ***b2*** available in a body size. Part numbers are in the following format with numbers representing millimeters:

20mm Body 5mm Bore

Clamp Style → **MFC20 - 6 - 5 - A**

6mm Bore Aluminium

MFC

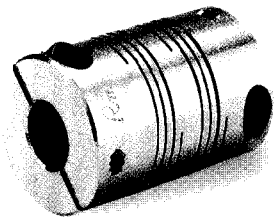

MFS

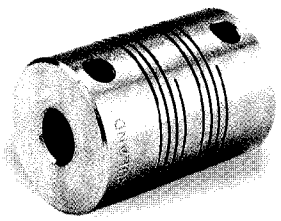

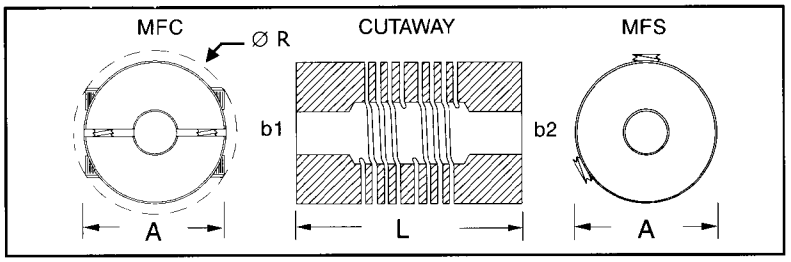

- Ideal for light duty power transmission applications
- Two sets of three spiral cuts and high strength stainless steel for greatest torque capability and torsional stiffness
- Greater torque capability and torsional stiffness than aluminium and MW stainless steel couplings
- Corrosion resistant
- Zero-backlash
- Accommodates angular, parallel, axial and complex misalignment
- Clamp style hardware configured for dynamic balancing

PART NUMBER				SPECIFICATIONS					PERFORMANCE				
CLAMP STYLE	SET SCREW STYLE	Ø BORE b1	Ø BORE b2	Ø A	Ø R (MFC)	L	DIN 912[3] (MFC)	DIN 916[3] (MFS)	STATIC TORQUE[2] (Nm)	TORSIONAL STIFFNESS[2] (Nm/rad)	MISALIGNMENT ANGULAR (Deg)	MISALIGNMENT PARALLEL (mm)	MISALIGNMENT AXIAL (mm)
		5	5						4,60	83,1			
		6	6						4,60	83,1			
MFC20	MFS20	6,35	6,35	20	22,8	30	M3	M4	3,60	81,9	3°	0,20	0,12
		8	8						3,60	81,9			
		6	6						6,10	197,6			
		6,35	6,35						6,10	197,6			
		8	8						5,60	136,4			
MFC25	MFS25	9,53	9,53	25	30,2	40	M4	M5	5,60	136,4	3°	0,38	0,25
		10	10						5,60	136,4			
		12	12						3,90	66,6			
		12,70	12,70						3,90	66,6			
		8	8						15,50	286,5			
		9,53	9,53						15,50	286,5			
		10	10						15,50	286,5			
MFC30	MFS30	12	12	30	34,9	45	M5	M6	13,50	220,4	3°	0,38	0,25
		12,70	12,70						10,90	130,2			
		14	14						10,90	130,2			
		10	10						23,56	337,1			
		12	12						23,56	337,1			
MFC40	MFS40	12,70	12,70	40	45,6	55	M6	M6	23,00	212,2	3°	0,76	0,38
		14	14						23,00	212,2			
		16	16						23,00	212,2			

For warranty/disclaimer information see page 13.

Note 1 All dimensions are in millimeters unless otherwise specified on chart.

Note 2 Ratings are at maximum misalignment. To obtain dynamic rating, the static torque ratings should be divided by 2 for non-reversing applications and by 4 for reversing applications.

Note 3 Screws are alloy steel with black oxide finish. See Page 12 for specifications.

Note 4 Shafts may penetrate into the inner chamber of the couplings. Space must be maintained between shafts to allow flexing.

Choose any bore ***b1*** and any bore ***b2*** available in a body size. Part numbers are in the following format with numbers representing millimeters:

20mm Body 5mm Bore

Clamp Style → **MFC20 - 6 - 5 - SS**

6mm Bore Stainless Steel

- Does not mar the shaft
- Precision honed straight bore couplings for excellent fit and alignment
- 3-piece styles available
- NYPATCH® anti-vibration hardware to prevent loosening of screws
- Additional step bores available
- Opposing hardware on 2-piece styles for dynamic balancing
- Bore tolerance: +0,051mm -0,000mm

MCLX

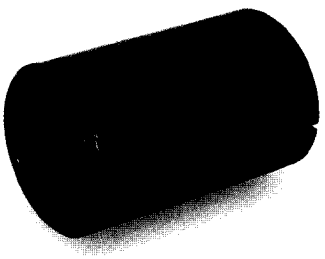

MSPX

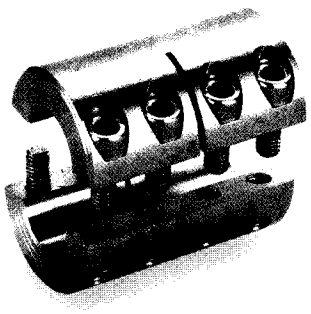

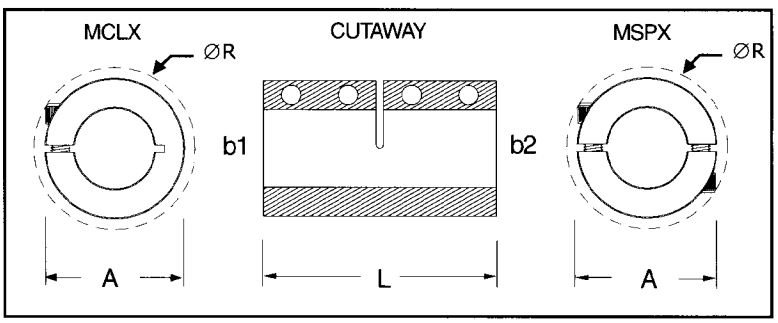

PART NO. STEEL	PART NO. ALUMINIUM	PART NO. STAINLESS STEEL	PART NO. STEEL	PART NO. STAINLESS STEEL	Ø b1	Ø b2	Ø A	Ø R	L	DIN 912
MCLX-6-6-F	MCLX-6-6-A	MCLX-6-6-SS	MSPX-6-6-F	MSPX-6-6-SS	6	6	18	21,2	30	M3x8
MCLX-8-7-F	MCLX-8-7-A	MCLX-8-7-SS	MSPX-8-7-F	MSPX-8-7-SS	8	7	24	26,8	35	M3x10
MCLX-8-8-F	MCLX-8-8-A	MCLX-8-8-SS	MSPX-8-8-F	MSPX-8-8-SS	8	8	24	26,8	35	M3x10
MCLX-9-9-F	MCLX-9-9-A	MCLX-9-9-SS	MSPX-9-9-F	MSPX-9-9-SS	9	9	24	26,8	35	M3x10
MCLX-10-9-F	MCLX-10-9-A	MCLX-10-9-SS	MSPX-10-9-F	MSPX-10-9-SS	10	9	29	32,7	45	M4x12
MCLX-10-10-F	MCLX-10-10-A	MCLX-10-10-SS	MSPX-10-10-F	MSPX-10-10-SS	10	10	29	32,7	45	M4x12
MCLX-12-9-F	MCLX-12-9-A	MCLX-12-9-SS	MSPX-12-9-F	MSPX-12-9-SS	12	9	29	32,7	45	M4x12
MCLX-12-12-F	MCLX-12-12-A	MCLX-12-12-SS	MSPX-12-12-F	MSPX-12-12-SS	12	12	29	32,7	45	M4x12
MCLX-14-12-F		MCLX-14-12-SS	MSPX-14-12-F	MSPX-14-12-SS	14	12	34	39,1	50	M5x16
MCLX-14-14-F		MCLX-14-14-SS	MSPX-14-14-F	MSPX-14-14-SS	14	14	34	39,1	50	M5x16
MCLX-15-14-F		MCLX-15-14-SS	MSPX-15-14-F	MSPX-15-14-SS	15	14	34	39,1	50	M5x16
MCLX-15-15-F		MCLX-15-15-SS	MSPX-15-15-F	MSPX-15-15-SS	15	15	34	39,1	50	M5x16
MCLX-16-16-F		MCLX-16-16-SS	MSPX-16-16-F	MSPX-16-16-SS	16	16	34	39,1	50	M5x16
MCLX-20-19-F		MCLX-20-19-SS	MSPX-20-19-F	MSPX-20-19-SS	20	19	42	48,2	65	M6x16
MCLX-20-20-F		MCLX-20-20-SS	MSPX-20-20-F	MSPX-20-20-SS	20	20	42	48,2	65	M6x16
MCLX-25-24-F		MCLX-25-24-SS	MSPX-25-24-F	MSPX-25-24-SS	25	24	45	50,8	75	M6x16
MCLX-25-25-F		MCLX-25-25-SS	MSPX-25-25-F	MSPX-25-25-SS	25	25	45	50,8	75	M6x16
MCLX-30-28-F		MCLX-30-28-SS	MSPX-30-28-F	MSPX-30-28-SS	30	28	53	58,1	83	M6x18
MCLX-30-30-F		MCLX-30-30-SS	MSPX-30-30-F	MSPX-30-30-SS	30	30	53	58,1	83	M6x18
MCLX-35-35-F		MCLX-35-35-SS	MSPX-35-35-F	MSPX-35-35-SS	35	35	67	74,1	95	M8x25
MCLX-40-40-F		MCLX-40-40-SS	MSPX-40-40-F	MSPX-40-40-SS	40	40	77	83,4	108	M8x25
MCLX-50-50-F		MCLX-50-50-SS	MSPX-50-50-F	MSPX-50-50-SS	50	50	85	93,2	124	M10x25

All dimensions are in millimeters.

For warranty/disclaimer information see page 13.

MCLC MSPC

RULAND

MCLC

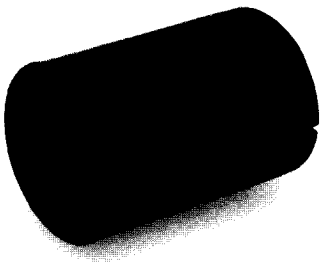

MSPC

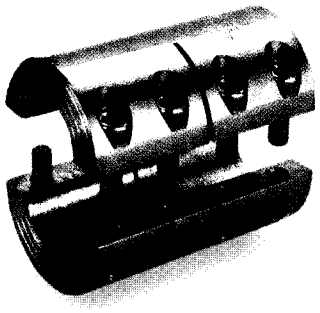

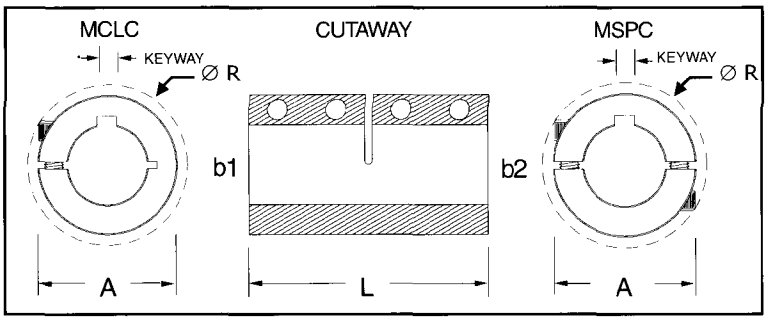

- Does not mar the shaft
- Precision honed straight bore couplings for excellent fit and alignment
- 3-piece styles available
- NYPATCH® anti-vibration hardware to prevent loosening of screws
- Additional step bores available
- Opposing hardware on 2-piece styles for dynamic balancing
- Bore tolerance: +0,051mm
- 0,000mm

PART NO. STEEL	PART NO. STAINLESS STEEL	PART NO. STEEL	PART NO. STAINLESS STEEL	Ø b1	Ø b2	Ø A	Ø R	L	KEYWAY K1	KEYWAY K2	DIN 912
MCLC-6-6-F	MCLC-6-6-SS	MSPC-6-6-F	MSPC-6-6-SS	6	6	18	21,2	30	2x2	2x2	M3x8
		MSPC-8-7-F	MSPC-8-7-SS	8	7	24	26,8	35	2x2	2x2	M3x10
MCLC-8-8-F	MCLC-8-8-SS	MSPC-8-8-F	MSPC-8-8-SS	8	8	24	26,8	35	2x2	2x2	M3x10
MCLC-9-9-F	MCLC-9-9-SS	MSPC-9-9-F	MSPC-9-9-SS	9	9	24	26,8	35	3x3	3x3	M3x10
		MSPC-10-9-F	MSPC-10-9-SS	10	9	29	32,7	45	3x3	3x3	M4x12
MCLC-10-10-F	MCLC-10-10-SS	MSPC-10-10-F	MSPC-10-10-SS	10	10	29	32,7	45	3x3	3x3	M4x12
		MSPC-12-9-F	MSPC-12-9-SS	12	9	29	32,7	45	4x4	3x3	M4x12
MCLC-12-12-F	MCLC-12-12-SS	MSPC-12-12-F	MSPC-12-12-SS	12	12	29	32,7	45	4x4	4x4	M4x12
		MSPC-14-12-F	MSPC-14-12-SS	14	12	34	39,1	50	5x5	4x4	M5x16
MCLC-14-14-F	MCLC-14-14-SS	MSPC-14-14-F	MSPC-14-14-SS	14	14	34	39,1	50	5x5	5x5	M5x16
		MSPC-15-14-F	MSPC-15-14-SS	15	14	34	39,1	50	5x5	5x5	M5x16
MCLC-15-15-F	MCLC-15-15-SS	MSPC-15-15-F	MSPC-15-15-SS	15	15	34	39,1	50	5x5	5x5	M5x16
MCLC-16-16-F	MCLC-16-16-SS	MSPC-16-16-F	MSPC-16-16-SS	16	16	34	39,1	50	5x5	5x5	M5x16
		MSPC-20-19-F	MSPC-20-19-SS	20	19	42	48,2	65	6x6	6x6	M6x16
MCLC-20-20-F	MCLC-20-20-SS	MSPC-20-20-F	MSPC-20-20-SS	20	20	42	48,2	65	6x6	6x6	M6x16
		MSPC-25-24-F	MSPC-25-24-SS	25	24	45	50,8	75	8x7	8x7	M6x16
MCLC-25-25-F	MCLC-25-25-SS	MSPC-25-25-F	MSPC-25-25-SS	25	25	45	50,8	75	8x7	8x7	M6x16
		MSPC-30-28-F	MSPC-30-28-SS	30	28	53	58,1	83	8x7	8x7	M6x18
MCLC-30-30-F	MCLC-30-30-SS	MSPC-30-30-F	MSPC-30-30-SS	30	30	53	58,1	83	8x7	8x7	M6x18
MCLC-35-35-F	MCLC-35-35-SS	MSPC-35-35-F	MSPC-35-35-SS	35	35	67	74,1	95	10x8	10x8	M8x25
MCLC-40-40-F	MCLC-40-40-SS	MSPC-40-40-F	MSPC-40-40-SS	40	40	77	83,4	108	12x8	12x8	M8x25
MCLC-50-50-F	MCLC-50-50-SS	MSPC-50-50-F	MSPC-50-50-SS	50	50	85	93,2	124	14x9	14x9	M10x2

All dimensions are in millimeters.

For warranty/disclaimer information see page 13.

Axial Load Tests

Cat. No.	Bore	Screw Size	Torque (Nm)	Slippage on Shaft * (N)
MCL-8-A	8mm	M3	2,1	2650
MSP-8-A	8mm	M3	2,1	3200
MCL-8-F	8mm	M3	2,1	4450
MSP-8-F	8mm	M3	2,1	4800
MCL-8-SS	8mm	M3	1,1	1000
MSP-8-SS	8mm	M3	1,1	1150
MCL-12-A	12mm	M4	4,6	5950
MSP-12-A	12mm	M4	4,6	6200
MCL-12-F	12mm	M4	4,6	6450
MSP-12-F	12mm	M4	4,6	7150
MCL-12-SS	12mm	M4	2,5	1350
MSP-12-SS	12mm	M4	2,5	2000
MCL-25-A	25mm	M6	16,0	15800
MSP-25-A	25mm	M6	16,0	16450
MCL-25-F	25mm	M6	16,0	18700
MSP-25-F	25mm	M6	16,0	19100
MCL-25-SS	25mm	M6	9,6	5300
MSP-25-SS	25mm	M6	9,6	6150
MCL-50-A	50mm	M8	39,0	27000
MSP-50-A	50mm	M8	39,0	28000
MCL-50-F	50mm	M8	39,0	40000
MSP-50-F	50mm	M8	39,0	40850
MCL-50-SS	50mm	M8	23,0	10000
MSP-50-SS	50mm	M8	23,0	11450

* CAUTION: THIS IS FAILURE MODE. SEE LIABILITY DISCLAIMER BELOW.

Materials

Steel Products: C12L14 Cold Drawn Bar through 5 ¼", C1117, C1117L or C12L14 Bar from 5 ½" through 7 ¾".
Aluminium Collars and Rigid Couplings: 2024-T351 Extruded and Drawn Aluminium Bar.
Stainless Steel Collars and Rigid Couplings: 18-8 (type 303) Austenitic, Non-Magnetic Bar.
Aluminium Flexible Couplings: 7075-T651
Stainless Steel Flexible Couplings: 17-4ph, heat treated.

Finishes

Steel Products: Hot Process Black Oxide surface preparation, impregnated with napthenic oil, centrifugally dried.
Aluminium Products: Bright Finish.
Stainless Steel Products: Bright Finish.

Black Oxide

The black oxide on our carbon steel collars and couplings is formulated as part of the total performance of the product. It enhances the holding ability of the collar/coupling, has anti-stick-slip characteristics and helps to keep the torque rating of the screw within its designed parameters. It also provides corrosion protection, although *it is not intended to be used as an outside* weather protective finish.

Hardware

DIN 912, NOMAR® Collars and Couplings in Stainless Steel: *18-8 (300 Series) Austenitic Stainless* Steel. Meet or exceed ASA specification B18.3.1M. NYPATCH® vibration resistant feature on coupling screws.

Set Screw Collars in Steel:
DIN 916. Heat treated. Meet or exceed ASA specification B18.3.6M. Forged Socket, Grade 45H.

Set Screw Collars in Stainless Steel:
DIN 916. 18-8 (300 series) Austenitic Stainless Steel, Cup Point. Meet or exceed ASA specification B18.3.6M. Forged Socket.

NOMAR® Collars and Couplings in Steel and *Aluminium: DIN 912, heat-treated, meet or exceed* ASA specification B18.3.1M and ASTM A574M property class 12.9. NYPATCH® vibration resistant feature on coupling screws.

Torque Ratings Clamp Screw

DIN 912 Clamp Screw	Seating Torque (Nm) Alloy	Seating Torque (Nm) Stainless Steel
M1.6	0,29	0,17
M2	0,60	0,36
M2.5	1,21	0,73
M3	2,10	1,10
M4	4,60	2,50
M5	9,50	5,40
M6	16,00	9,60
M8	39,00	23,00
M10	77,00	46,00

Torque Ratings Set Screw

DIN 916 Set Screw	Seating Torque (Nm) Alloy	Seating Torque (Nm) Stainless Steel
M2	0,21	0,13
M2.5	0,57	0,44
M3	0,92	0,73
M4	2,20	1,76
M5	4,00	3,20
M6	7,20	5,76
M8	17,00	13,60
M10	33,00	26,40

Stick-Slip

Stick-slip is the condition where the screw, instead of rotating uniformly as torquing continues, begins to show a stop-start pattern. When this happens, the torsioning effect on the screw is being absorbed as excess friction between the threads or the underside of the head and the mating parts of the collar, instead of contributing to the stress in the joint of the elements. If the stresses are low, the collar will not achieve the full holding power and could potentially cause a failure.

LIABILITY DISCLAIMER
Axial load values are in FAILURE MODE. They are shown solely for the reader to utilize appropriate testing equipment to make his/her own evaluation, and are not intended by Ruland Manufacturing Company, Inc., as warranties, either express or implied, of fitness for a given purpose. A full disclaimer and limited warranty are printed on page 13.

Installation Instructions

Shaft Collars

1. Use collars as they are received. Do not degrease.
2. Wipe the bore clean.
3. Apply a thin coat of light oil to the shaft.
4. Place collar in desired location on shaft and tighten the collar with an unplated wrench until a slight resistance is felt.
5. On two-piece collars be sure to maintain the gap between the two halves of the collar during installation.
6. Wring collar into final position and tighten screws to the full recommended seating torque. (See charts on previous page.)

Flexible Couplings

1. Align both hubs of the coupling on the shafts that are to be joined.
2. Fully tighten the screws on one hub to their recommended seating torque using an unplated wrench. (See charts on previous page.)
3. Before tightening the screws on the second hub, rotate the coupling by hand to allow it to reach its free length.
4. Tighten the second hub on the shaft such that the misalignment angle remains centered along the length of the coupling and the coupling remains axially relaxed.
5. On relief bore couplings, the shafts may be extended into the relieved area of the coupling without affecting coupling performance.

Rigid Couplings

1. Align the coupling on the two shafts to be connected.
2. Tighten the NYPATCH® clamp screws with an unplated wrench to half of the recommended seating torque.
3. Tighten screws to the full recommended seating torque. (See charts on previous page.)
4. Be sure to maintain the gap between the two halves of the coupling on two-piece styles.

WARRANTY/DISCLAIMER OF UNSTATED WARRANTIES/LIMITATION OF LIABLITY

Warranty. Ruland warranties that the products sold hereunder meet Ruland's size and materials specifications as set forth in this catalog. Products not meeting Ruland's size and material specifications will, at Ruland's option, be replaced or the purchase price refunded.

Disclaimer of Unstated Warranties. THE WARRANTY PRINTED ABOVE IS THE ONLY WARRANTY APPLICABLE TO THESE PRODUCTS. ALL OTHER WARRANTIES, EXPRESS OR IMPLIED, INCLUDING BUT NOT LIMITED TO THE IMPLIED WARRANTIES OF MERCHANTABILITY AND FITNESS FOR A PARTICULAR PURPOSE ARE DISCLAIMED. It is the responsibility of the user to determine the suitability of Ruland products for a specific application. No person, including employees of Ruland or agents in the company's channels of distribution is authorized to represent on Ruland's behalf, the suitability of Ruland products for a specific purpose.

Limitation of Liability. IT IS UNDERSTOOD AND AGREED THAT SELLER'S LIABILITY SHALL NOT EXCEED THE AMOUNT OF THE PURCHASE PRICE. SELLER SHALL NOT BE LIABLE FOR SPECIAL, INDIRECT OR CONSEQUENTIAL DAMAGES. THE PRICE STATED FOR THE PRODUCT IS A CONSIDERATION IN LIMITING RULAND'S LIABILITY.