

Input card

Part no.	**EU1E-SWD-1AX-2**
Article no.	**174718**
Catalog No.	**EU1E-SWD-1AX-2**

Powering Business Worldwide

Delivery programme

Photo			
Product range			SmartWire-DT slave
Basic function			Analog modules
Function			For connection of analog I/O signals
Short Description			Input: 0 - 20 mA
Inputs			
Analog			1
Connection to SmartWire-DT			yes

Technical data

General

Standards			IEC/EN 61131-2
Dimensions (W x H x D)		mm	85.6 x 56.9 x 20.1
Weight		kg	0.07
Mounting			DIN-rail, screw fixing (M4), mounting section (Clip M20)
Mounting position			As required

Climatic environmental conditions

Climatic proofing			Dry heat to IEC 60068-2-2 Damp heat as per EN 60068-2-3
Air pressure (operation)		hPa	795 - 1080
Ambient temperature			
Operation	ϑ	°C	-25 - +70
Storage / Transport	ϑ	°C	-40 - +70
Relative humidity			
Condensation			permissible
Relative humidity, non-condensing (IEC/EN 60068-2-30)		%	5 - 95

Ambient conditions, mechanical

Protection type (IEC/EN 60529, EN50178, VBG 4)			IP67
Vibrations (IEC/EN 61131-2:2008)			
Constant amplitude 3,5 mm		Hz	5 - 8.4
Constant acceleration 1 g		Hz	8.4 - 150
Mechanical shock resistance (IEC/EN 60068-2-27) semi-sinusoidal 30 g/11 ms		Impacts	9
Drop to IEC/EN 60068-2-31	Drop height	mm	50
Free fall, packaged (IEC/EN 60068-2-32)		m	0.3

Electromagnetic compatibility (EMC)

Overvoltage category			II
Pollution degree			3
Electrostatic discharge (IEC/EN 61131-2:2008)			
Air discharge (Level 3)		kV	8
Contact discharge (Level 2)		kV	4
Electromagnetic fields (IEC/EN 61131-2:2008)			
80 - 1000 MHz		V/m	10
1.4 - 2 GHz		V/m	3
2 - 2.7 GHz		V/m	1
Radio interference suppression (SmartWire-DT)			EN 55011 Class A
Burst (IEC/EN 61131-2:2008, Level 3)			

Supply cable		kV	2
Signal lines		kV	1
SmartWire-DT cables		kV	1
Surge (IEC/EN 61131-2:2008, Level 1)			
Surge power cables		kV	0.5
Surge I/O cables		kV	1
Radiated RFI (IEC/EN 61131-2:2008, Level 3)		V	10

SmartWire-DT network

Station type			SmartWire-DT slave
Setting the baud rate			automatic
Baud rate (data transfer speed)		kbps	maximum 2000
Status SmartWire-DT		LED	Green
SWD-IN			M12 plug (A-coded), 5 pole
SWD-OUT			M12 socket (A-coded), 5 pole
Current consumption (24V, without sensor and without I/O supply)		mA	
Current consumption (24 V SWD supply)		mA	30
Sensor supply			
Max. current consumption per M12 I/O plug		mA	70
Overload and short-circuit proof			yes, with diagnostics

Connection supply and I/O

Terminal for I/O sensor			
Connection type			5-pin M12 socket (A-keyed)

24 V DC supply for output supply

Power supply			
Power loss	P	W	1.1

Analog inputs

Quantity			1 (2-wire connection, screened, length < 10 m)
Parameter setting			
Input type			Current
Averaging			adjustable
Max. current			
Input current		mA	0 - 20
Input impedance		Ω	< 250
Resolution		Bit	12
Conversion time		ms	20
Total error		%	± 1
Repetition accuracy		%	± 0.5
Dielectric strength		V	± 30

Potential isolation

Inputs for SmartWire-DT			No
Input to input			No

Design verification as per IEC/EN 61439

Technical data for design verification			
Rated operational current for specified heat dissipation	I_n	A	0
Heat dissipation per pole, current-dependent	P_{vid}	W	0
Equipment heat dissipation, current-dependent	P_{vid}	W	0
Static heat dissipation, non-current-dependent	P_{vs}	W	1.1
Heat dissipation capacity	P_{diss}	W	0
Operating ambient temperature min.		°C	-25
Operating ambient temperature max.		°C	70
Degree of Protection			IP67
IEC/EN 61439 design verification			
10.2 Strength of materials and parts			
10.2.2 Corrosion resistance			Meets the product standard's requirements.
10.2.3.1 Verification of thermal stability of enclosures			Meets the product standard's requirements.

10.2.3.2 Verification of resistance of insulating materials to normal heat			Meets the product standard's requirements.
10.2.3.3 Verification of resistance of insulating materials to abnormal heat and fire due to internal electric effects			Meets the product standard's requirements.
10.2.4 Resistance to ultra-violet (UV) radiation			Meets the product standard's requirements.
10.2.5 Lifting			Does not apply, since the entire switchgear needs to be evaluated.
10.2.6 Mechanical impact			Does not apply, since the entire switchgear needs to be evaluated.
10.2.7 Inscriptions			Meets the product standard's requirements.
10.3 Degree of protection of ASSEMBLIES			Meets the product standard's requirements.
10.4 Clearances and creepage distances			Meets the product standard's requirements.
10.5 Protection against electric shock			Does not apply, since the entire switchgear needs to be evaluated.
10.6 Incorporation of switching devices and components			Does not apply, since the entire switchgear needs to be evaluated.
10.7 Internal electrical circuits and connections			Is the panel builder's responsibility.
10.8 Connections for external conductors			Is the panel builder's responsibility.
10.9 Insulation properties			
10.9.2 Power-frequency electric strength			Is the panel builder's responsibility.
10.9.3 Impulse withstand voltage			Is the panel builder's responsibility.
10.9.4 Testing of enclosures made of insulating material			Is the panel builder's responsibility.
10.10 Temperature rise			The panel builder is responsible for the temperature rise calculation. Eaton will provide heat dissipation data for the devices.
10.11 Short-circuit rating			Is the panel builder's responsibility.
10.12 Electromagnetic compatibility			Is the panel builder's responsibility.
10.13 Mechanical function			The device meets the requirements, provided the information in the instruction leaflet (IL) is observed.

Technical data ETIM 6.0

PLC's (EG000024) / Fieldbus, decentr. periphery - analogue I/O module (EC001596)			
Electric engineering, automation, process control engineering / Control / Field bus, decentralized peripheral / Field bus, decentralized peripheral - analogue I/O module (ecl@ss8.1-27-24-26-01 [BAA061011])			
Supply voltage AC 50 Hz		V	0 - 0
Supply voltage AC 60 Hz		V	0 - 0
Supply voltage DC		V	0 - 0
Voltage type of supply voltage			DC
Input, current			Yes
Input, voltage			No
Input, resistor			No
Input, resistance thermometer			No
Input, thermocouple			No
Input signal, configurable			Yes
Resolution of the analogue inputs		Bit	12
Output, current			No
Output, voltage			No
Output signal configurable			No
Resolution of the analogue outputs		Bit	0
Number of analogue inputs			1
Number of analogue outputs			0
Analog inputs configurable			Yes
Analog outputs configurable			No
Number of HW-interfaces industrial Ethernet			0
Number of HW-interfaces PROFINET			0
Number of HW-interfaces RS-232			0
Number of HW-interfaces RS-422			0
Number of HW-interfaces RS-485			0
Number of HW-interfaces serial TTY			0
Number of HW-interfaces parallel			0
Number of HW-interfaces Wireless			0
Number of HW-interfaces other			0
Supporting protocol for TCP/IP			No

Supporting protocol for PROFIBUS		No
Supporting protocol for CAN		No
Supporting protocol for INTERBUS		No
Supporting protocol for ASI		No
Supporting protocol for KNX		No
Supporting protocol for MODBUS		No
Supporting protocol for Data-Highway		No
Supporting protocol for DeviceNet		No
Supporting protocol for SUCONET		No
Supporting protocol for LON		No
Supporting protocol for PROFINET IO		No
Supporting protocol for PROFINET CBA		No
Supporting protocol for SERCOS		No
Supporting protocol for Foundation Fieldbus		No
Supporting protocol for EtherNet/IP		No
Supporting protocol for AS-Interface Safety at Work		No
Supporting protocol for DeviceNet Safety		No
Supporting protocol for INTERBUS-Safety		No
Supporting protocol for PROFIsafe		No
Supporting protocol for SafetyBUS p		No
Supporting protocol for other bus systems		Yes
Radio standard Bluetooth		No
Radio standard WLAN 802.11		No
Radio standard GPRS		No
Radio standard GSM		No
Radio standard UMTS		No
IO link master		No
System accessory		Yes
Degree of protection (IP)		IP67
Type of electric connection		-
Fieldbus connection over separate bus coupler possible		Yes
Rail mounting possible		Yes
Wall mounting/direct mounting		Yes
Front build in possible		No
Rack-assembly possible		No
Suitable for safety functions		No
Category according to EN 954-1		
SIL according to IEC 61508		None
Performance level acc. to EN ISO 13849-1		None
Appendant operation agent (Ex ia)		No
Appendant operation agent (Ex ib)		No
Explosion safety category for gas		None
Explosion safety category for dust		None
Width	mm	85.6
Height	mm	56.9
Depth	mm	20.1

Approvals

UL File No.		E170645
North America Certification		UL listed, CSA certified
Specially designed for North America		No

Dimensions

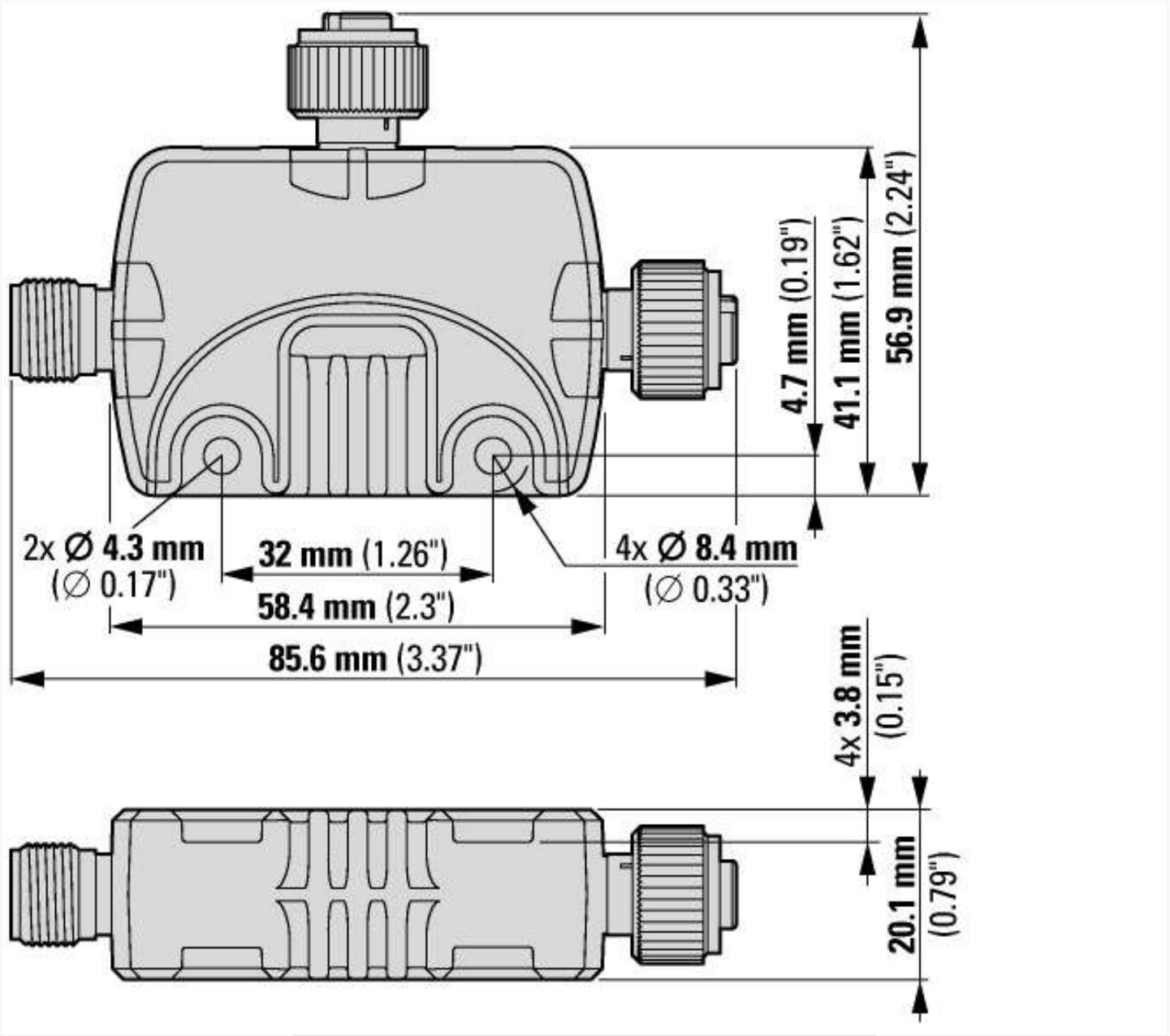

SmartWire-DT I/O modules (IP67) EU1E-SWD-1AX…

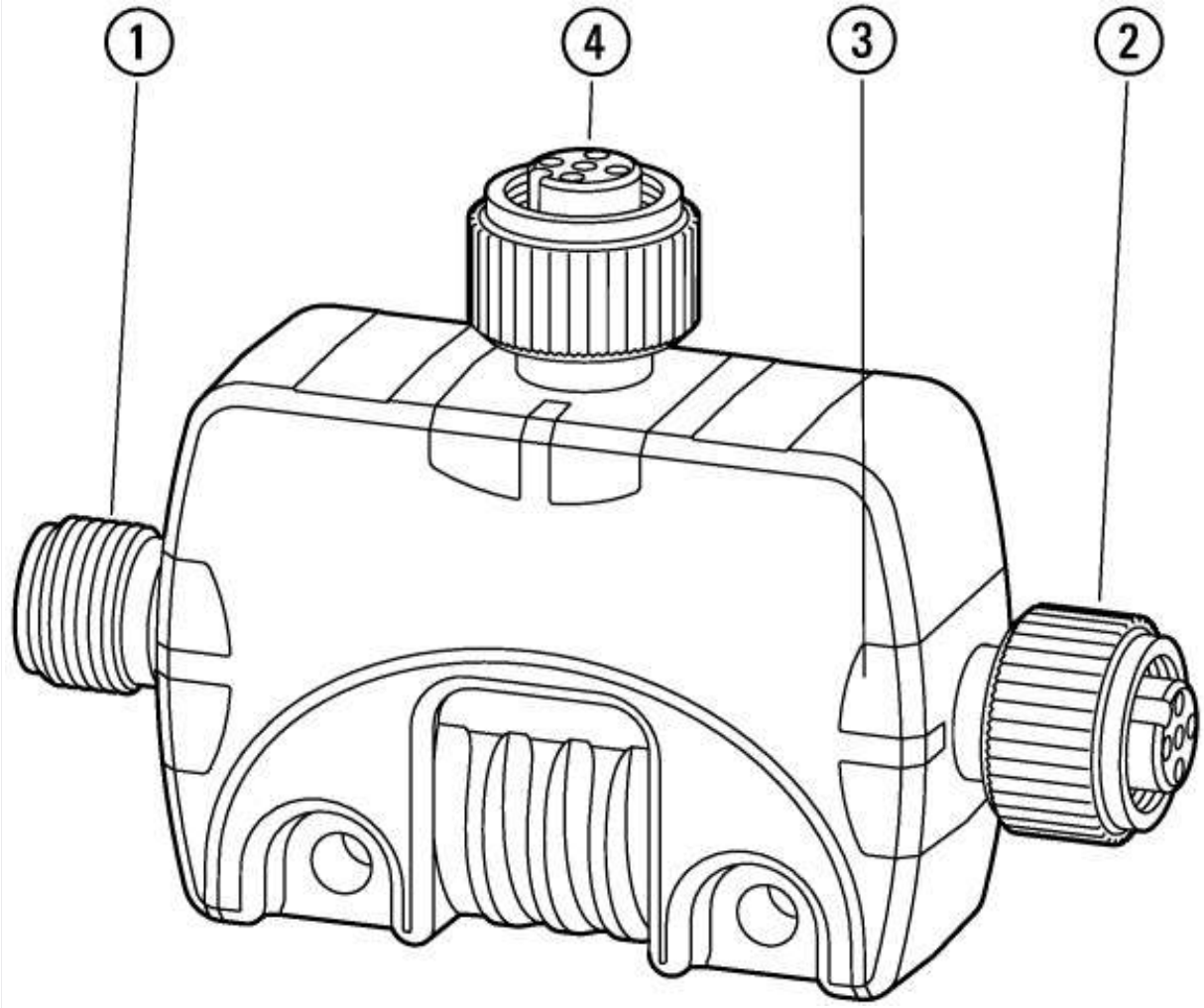

① SmartWire-DT connection SWD IN

② SmartWire-DT connection SWD OUT

③ SmartWire-DT diagnostics LED

④ I/O connection X1

Additional product information (links)

MN120006 SmartWire-DT modules – IP67	
MN120006 SmartWire-DT Teilnehmer – IP67 - Deutsch	ftp://ftp.moeller.net/DOCUMENTATION/AWB_MANUALS/MN120006_DE.pdf
MN120006 SmartWire-DT modules – IP67 - English	ftp://ftp.moeller.net/DOCUMENTATION/AWB_MANUALS/MN120006_EN.pdf
MN05006002Z SmartWire-DT Manual, The system	
MN05006002Z SmartWire-DT Manual, The system - Deutsch	ftp://ftp.moeller.net/DOCUMENTATION/AWB_MANUALS/MN05006002Z_DE.pdf
MN05006002Z SmartWire-DT Manual, The system - English	ftp://ftp.moeller.net/DOCUMENTATION/AWB_MANUALS/MN05006002Z_EN.pdf
MN05006002Z SmartWire-DT Manual, The system - italiano	ftp://ftp.moeller.net/DOCUMENTATION/AWB_MANUALS/MN05006002Z_IT.pdf
amp;startpage=Title;Product Range Catalog SmartWire-DT	http://ecat.moeller.net/flip-cat/?edition=SWCAT&amp
Technical data	http://ecat.moeller.net/flip-cat/?edition=SWCAT&startpage=32
SWD-ASSIST	http://downloadcenter.moeller.net/en/software.a487d8b7-da91-486f-b3ba-a7ca2035db99

© 09/2016 by Eaton Industries GmbH