DF3100

Feeding module for ground potential

Supply Module GND/1x 10mm2

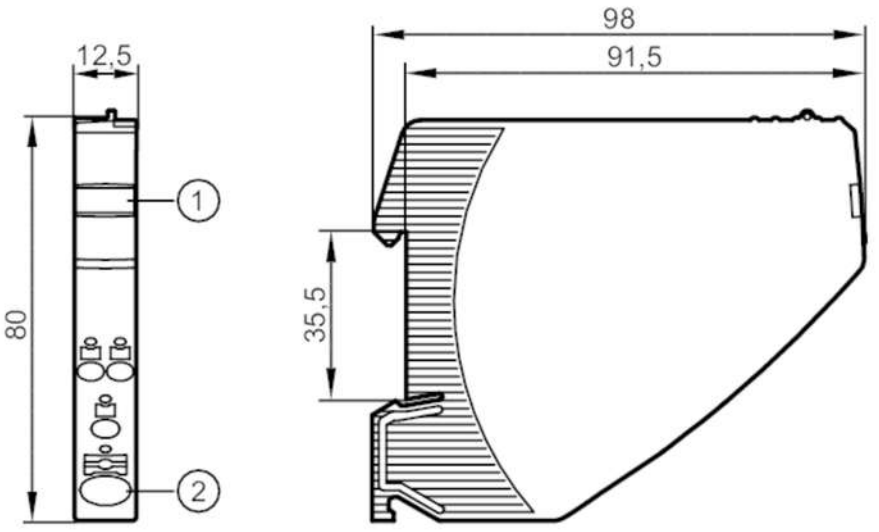

1 panel for labelling
2 push-in terminal 24 V DC

Application			
Design			feeding module GND (1 x 10 mm²)
Electrical data			
Operating voltage	[V]		18...30 DC
Nominal voltage DC	[V]		24
Protection class			III
Max. load current	[A]		40
Operating conditions			
Ambient temperature	[°C]		-25...60
Storage temperature	[°C]		-40...70
Protection			IP 20; (on the front)
Tests / approvals			
EMC		EN 61000-6-3	radiation of interference
		EN 61000-6-2	immunity
Mechanical data			
Weight	[g]		48.6
Type of mounting			mounting on DIN rail
Installation instruction			string mounting possible
Dimensions	[mm]		80 x 12.5 x 98.5

DF3100

Feeding module for ground potential

Supply Module GND/1x 10mm2

Electrical connection

push-in terminals:

Connection

