TECHNICAL DATASHEET

Ex Absolute Encoders AX 70 / 71



Version AX70 - Aluminum



Version AX71 - Stainless Steel

- ATEX certification for gas and dust explosion proof
- Same electrical performance as ACURO industry
- Protection class up to IP67
- Diameter only 70 mm
- Robust design
- Also available with marine grade stainless steel
- Resolution up to 34 Bit (22 Bit ST, 12 Bit MT)
- Applications: enamelling production line, petro chemistry, bottling machines, mixers, silo works, mills
- Interfaces: SSI / BiSS, SSI programmable, Profibus, CANopen, DeviceNet

EX-CLASSIFICATION

The absolute shaft encoder line ACURO is available in explosion proof design with explosion proof enclosure under AX70 and AX71(stainless steel).
The PTB has assured with the **EC-TYPE-Examination Certificate PTB 10 ATEX 1036 X** that the AX70/71 meets the requirements of safety and health according to EN IEC 60079-0:2018+AC:2020; EN 60079-1:2014+AC:2018 and EN 60079-31:2014.
Therefore it is approved in explosive areas, code:
"Ex II 2 G Ex db IIC T6 Gb and Ex II 2 D Ex tb IIIC T85°C Db" and
"Ex II 2 G Ex db IIC T4 Gb and Ex II 2 D Ex tb IIIC T135°C Db"

Additionally the encoder is certified according the IECEx standards IEC 60079-0:2017; IEC 60079-1:2014 and IEC 60079-31:2022. Assured according **IECEx PTB 12.0002X** certification.

As well as assured with **ETL 4007103** according UL 60079-0:2009 Ed.5+R:08Dec2009 and UL 60079-1:2015 Ed.7+R:23Jan2020 as well as CSA C22.2#60079-0:2011 Ed.2 and CSA C22.2#60079-1:2011 Ed.2 for the American market, for use in: Class I, Zone 1, AEx d IIC T4 Gb, Ambient Temperature Range: -40°C to +60°C.

And also assured with **CNA-C23-01:2019** according to GB 12476.1-2013; GB 12476.5-2013; GB 3836.1-2010; GB 3836.2-2010 for the Chinese Market.
Marking: Ex d IIC T6/T4 GB; Ex tD A21 IP6X T85°C/T135°C

For applications that require halogen-free cables or customer-specific modifications, special versions can be requested.

Ex	II	2	G	Ex	db	IIC	T6/ T4	Gb	gas
	II	2	D	Ex	tb	IIIC	T85°C/T135°C	Db	dust

- Equipment protection level (EPL)
- Temperature class
- Explosion group
- Explosion proof enclosure (db) (gas); Protection by enclosure (tb) (dust)
- Explosion-proof operating material
- For use in areas with gas, vapours, mist and cloud of dust
- Category 2
- Device group II (all area expect mining)
- Explosion proof enclosure with EC-TYPE-Examination Certificate

T6 = Highest permissible surface temperature +85°C
T4 = Highest permissible surface temperature +135°C
T3 = Highest permissible surface temperature +200°C

TECHNICAL DATASHEET

Ex Absolute Encoders AX 70 / 71

TECHNICAL DATA
Mechanical (for all interfaces)

Housing diameter	70 mm
Shaft diameter	10 mm (solid shaft)
Flange (Mounting of housing)	Clamping flange, fastening screw thread 3x M6x12
Protection class housing [1] (EN 60529/ A1:2000-02)	T4: IP65 or IP67 T6: IP65
Protection class shaft [1] (EN 60529/ A1:2000-02)	T4: IP64 or IP67 T6: IP64
Starting torque typ.	< 1 Ncm
Moment of inertia	ca. 20 gcm^2
Max. shaft load	axial 40 N/ radial 100 N
Vibration resistance (IEC 68-2-6)	100 m/ s^2 (10 - 500 Hz)
Shock resistance (IEC 68-2-27)	1000 m/ s^2 (6 ms)
Operating temperature	Operating temperature correlating with Ex-requirements, please see following tab showing allowed ambient temperature in relation to different conditions
Storage temperature	-25°C … +85°C
Material shaft	Stainless Steel
Material housing	Aluminum (AX70); Stainless Steel (AX71)
Weight	AX70: approx. 1,4 kg; AX71: approx. 4,8 kg
Connection	Cable, axial or radial

[1] no standing water allowed at the shaft entrance or cable entrance or at the ball bearing.

Interface	Protection class	Max. speed	Ambient temperature	Temperature class
SSI / BiSS	IP64	1000 rpm	-40 °C … +60 °C	T6
		10000 rpm	-40 °C … +40 °C	T6
		10000 rpm	-40 °C … +60 °C	T4
	IP67	1000 rpm	-40 °C … +60 °C	T6
		6000 rpm	-40 °C … +60 °C	T4
		10000 rpm	-40 °C … +55 °C	T4
Profibus CANopen DeviceNet SSI-P	IP64	1000 rpm	-40 °C … +60 °C	T6
		6000 rpm	-40 °C … +50 °C	T6
		10000 rpm	-40 °C … +60 °C	T4
	IP67	1000 rpm	-40 °C … +55 °C	T6
		3000 rpm	-40 °C … +40 °C	T6
		6000 rpm	-40 °C … +60 °C	T4
		10000 rpm	-40 °C … +40 °C	T4

Ex Absolute Encoders AX 70 / 71

TECHNICAL DATA
Electrical

Profibus;
CANopen;
DeviceNet

	Profibus	CANopen	DeviceNet
Supply voltage	DC 10-30 V	DC 10-30 V	DC 10-30 V
Current consumption	220 mA (ST) / 250 mA (MT)	max.250 mA (ST / MT)	220 mA (ST) / 250 mA (MT)
Profile/ Protocol	Profibus DP with encoder profile CLASS C2 (parameterizable)	CANopen according DS 301 with encoder profile DSP 406	DeviceNet according to Rev. 2.0, programmable encoder
Output code	Binary	Binary	Binary
Resolution singleturn	10 - 16 Bit	10 - 16 Bit	10 - 14 Bit
Resolution multiturn	12 Bit	12 Bit	12 Bit
Baud rate	is automatically set within a range of 9.6 Kbit/s through 12Mbit/s	set via bus within a range of 10 to 1000 Kbit/s (Standard setting for baud rate is 800 Kbit/s ex works	Baud rate is = 500 KBaud
Bus terminating resistor	External mounting	External mounting	Activated
Device address	Set via Bus	-	-
Node ID	-	Set via Bus	-
MAC-ID	-	-	MAC-ID = 1
Integrated special functions	Speed, Acceleration, Operating time	Speed, Acceleration, rotary axis, Limit values, Operating time	-
Programmable	Resolution, Preset, Direction	Resolution, Preset, Direction	Resolution, Preset, Direction

TECHNICAL DATA
Electrical

SSI / BiSS;
SSI programmable

	SSI / BiSS	SSI programmable
Supply voltage	DC 10-30 V	DC 10-30 V
Current consumption	220 mA (ST) / 250 mA (MT)	max. 250 mA (ST / MT)
Lines/ Drivers	Clock and Data RS422	clock and data RS422
Output code	Binary or Gray	Binary or Gray
Resolution singleturn	10 - 22 Bit	10 - 17 Bit
Resolution multiturn	12 Bit	12 Bit
Programmable (with WIN SSI)	-	Resolution, Code type, Direction, Output format, Warning, Alarm, Preset values
Control input	$\overline{\text{Direction}}$	Direction, Preset 1, Preset 2
Alarm output	Alarm bit	Alarm bit

Ex Absolute Encoders AX 70 / 71

PIN ASSIGNEMENT

Profibus; CANopen; DeviceNet

Color	Profibus	CANopen	DeviceNet
yellow	B in	CAN in+	CAN_H
green	A in	CAN in -	CAN_L
pink	B out	CAN out+	CAN_H
grey	A out	CAN out -	CAN_L
blue	GND1 (M5V[1])	CAN GND in	DRAIN
brown	VCC1 (P5V[1])	-	-
black	-	CAN GND out	DRAIN out
white 0,5 mm	UB in	UB in	UB in
brown 0,5 mm	0 V in	0 V in	0 V in
Screen	Screen connected to encoder housing		

[1]used for power supply for an external bus termination resistor

PIN ASSIGNEMENT

SSI / BiSS;
SSI programmable

Color	No.	SSI / BiSS
white 0.5 mm	6	-
brown 0.5 mm	5	-
green	10	$\overline{\text{Clock}}$
yellow	9	Clock
grey	8	$\overline{\text{Data}}$
pink	7	Data
blue	3	$\overline{\text{Direction}}$
black	4	0 V signal output
red	1	-
violet	2	-
brown 0.14 mm	11	0 V in
white 0.14 mm	12	UB in
Screen		Screen connected to the housing

Color	No.	SSI programmable
white 0.14 mm	6	RS232 RxD
brown 0.14 mm	5	RS232 TxD
green	10	$\overline{\text{Clock}}$
yellow	9	Clock
grey	8	$\overline{\text{Data}}$
pink	7	Data
blue	3	$\overline{\text{Direction}}$
black	4	0 V signal output
red	1	Preset 1
violet	2	Preset 2
brown 0.5 mm	11	0 V in
white 0.5 mm	12	UB in
Screen		Screen connected to the housing

RECOMMENDED DATA TRANSFER RATE WITH SSI

(only SSI)

Lead length	Clock rate
< 50 m	< 400 kHz
< 100 m	< 300 kHz
< 200 m	< 200 kHz
< 400 m	< 100 kHz

The max. data transfer rate depends on the cable length. $\overline{\text{For clock}}$/ clock and data/ $\overline{\text{data}}$ please use twisted pairs. Use shielded cable.

DIMENSIONED DRAWINGS
IP64

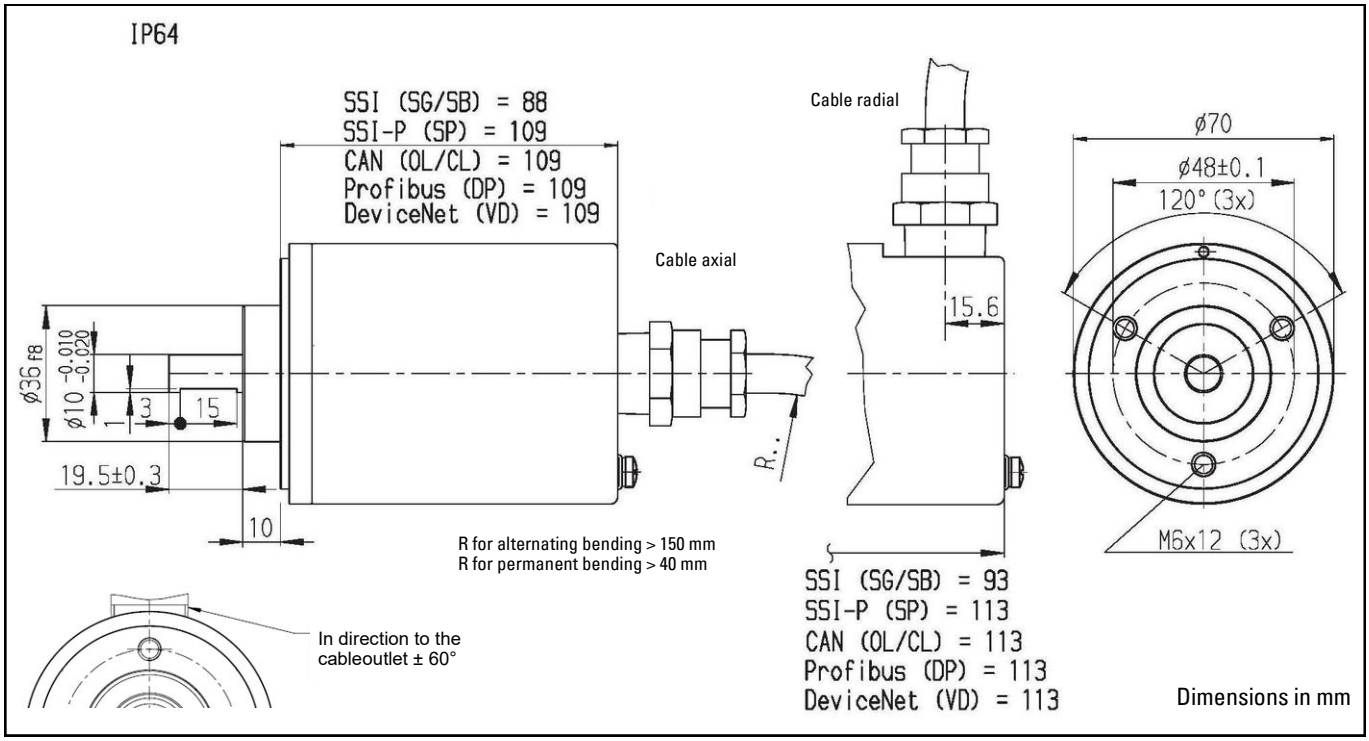

DIMENSIONED DRAWINGS
IP67

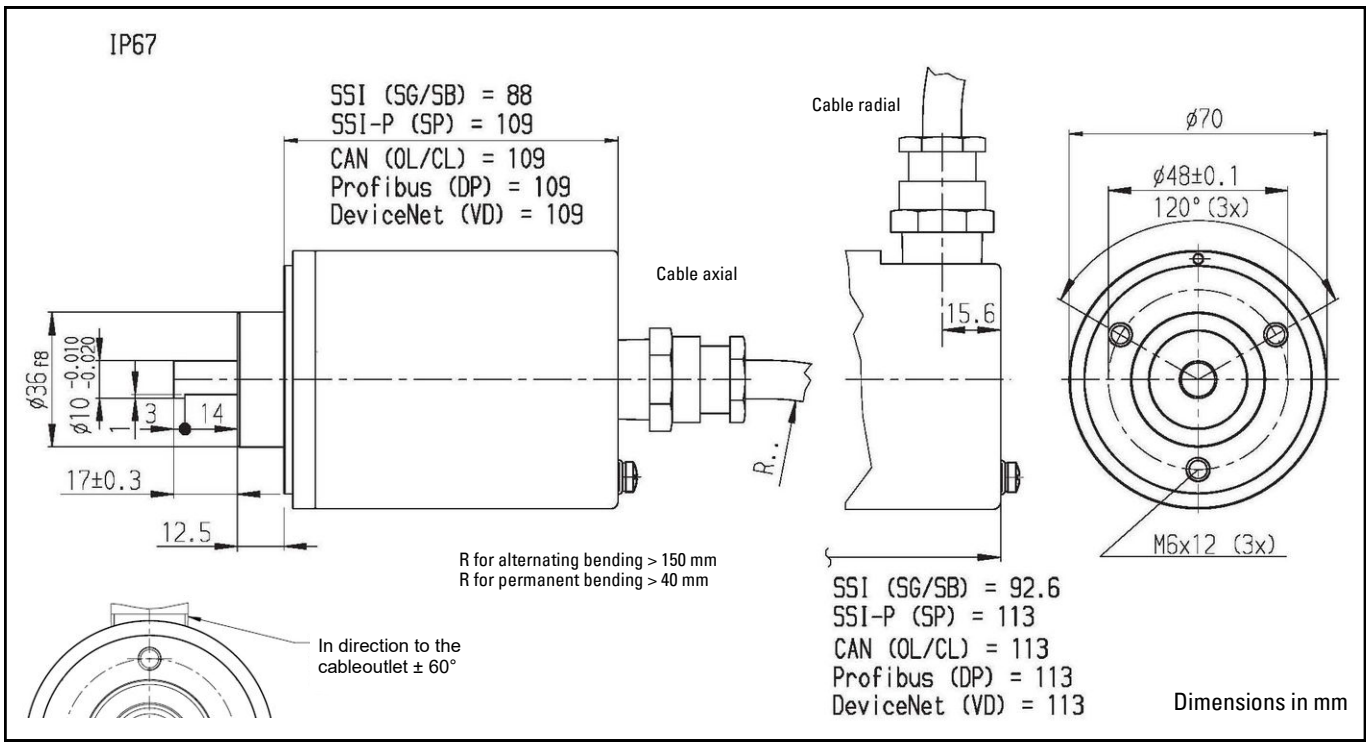

ORDERING INFORMATION
SSI / BiSS

Type	Resolution [1]	Supply voltage	Flange, Protection, Shaft	Interface	Connection [5]
/					
AX70 Aluminum **AX71** Stainless steel	**0010** 10 Bit ST **0012** 12 Bit ST **0013** 13 Bit ST **0014** 14 Bit ST **0017** 17 Bit ST **0019** 19 Bit ST **0022** 22 Bit ST **0360** 360 Increments ST [2] **0720** 720 Increments ST [3] **1212** 12 Bit MT+12 Bit ST **1213** 12 Bit MT+13 Bit ST **1214** 12 Bit MT+14 Bit ST **1217** 12 Bit MT+17 Bit ST **1219** 12 Bit MT+19 Bit ST **1222** 12 Bit MT+22 Bit ST	**E** DC 10 - 30 V	**K.42** Clamping, IP64, 10 mm **K.72** Clamping, IP67, 10 mm [4]	**SG** SSI Gray **SB** SSI Binary **BI** BiSS-B **BE** BiSS-C	**A-F0** Cable axial, 5m **B-F0** Cable radial, 5m

[1] When resolution > 14 Bit: max. clock frequency 178 kHz
[2] with Offset 76 (value range 76...435)
[3] with Offset 152 (value range 152...871)
[4] Dust explosion-proof certification (D) only for IP67
[5] If longer cables are required, please see additional ordering information on page 8

ORDERING INFORMATION
SSI programmable

Type	Resolution	Supply voltage	Flange, Protection, Shaft	Interface	Connection [2]
/					
AX70 * Aluminum **AX71** Stainless steel	**0010** 10 Bit ST **0012** 12 Bit ST **0013** 13 Bit ST **0014** 14 Bit ST **0017** 17 Bit ST **1212** 12 Bit MT+12 Bit ST **1213** 12 Bit MT+13 Bit ST **1214** 12 Bit MT+14 Bit ST **1217** 12 Bit MT+17 Bit ST higher resolutions on request	**E** DC 10 - 30 V	**K.42** Clamping, IP64, 10 mm **K.72** Clamping, IP67, 10 mm [1]	**SP** SSI programmable	**A-F0** Cable axial, 5m **B-F0** Cable radial, 5m

[1] Dust explosion-proof certification (D) only for IP67
[2] If longer cables are required, please see additional ordering information on page 8
* AX70 not available with connection code “B”

Art. No.: 2-539-240
Version 3 260724TK
© Hengstler GmbH Uhlandstr. 49 D-78554 Aldingen/ Germany
☎+49 74 24 -89 0 Fax +49 74 24 - 89 500
E-mail: info@hengstler.com Internet: www.hengstler.com

ORDERING INFORMATION
Profibus

Type	Resolution	Supply voltage	Flange, Protection, Shaft	Interface	Connection [2]
/					
AX70 * Aluminum **AX71** Stainless steel	**0010** 10 Bit ST **0012** 12 Bit ST **0013** 13 Bit ST **0014** 14 Bit ST **0016** 16 Bit ST **1212** 12 Bit MT+12 Bit ST **1213** 12 Bit MT+13 Bit ST **1214** 12 Bit MT+14 Bit ST **1216** 12 Bit MT+16 Bit ST	**E** DC 10 - 30 V	**K.42** Clamping, IP64, 10 mm **K.72** Clamping, IP67, 10 mm [1]	**DP** Profibus	**A-F0** Cable axial, 5m **B-F0** Cable radial, 5m

[1] Dust explosion-proof certification (D) only for IP67
[2] If longer cables are required, please see additional ordering information on page 8
* AX70 not available with connection code “B”

ORDERING INFORMATION
CANopen

Type	Resolution	Supply voltage	Flange, Protection, Shaft	Interface	Connection [2]
/					
AX70 * Aluminum **AX71** Stainless steel	**0010** 10 Bit ST **0012** 12 Bit ST **0013** 13 Bit ST **0014** 14 Bit ST **0016** 16 Bit ST **1212** 12 Bit MT+12 Bit ST **1213** 12 Bit MT+13 Bit ST **1214** 12 Bit MT+14 Bit ST	**E** DC 10 - 30 V	**K.42** Clamping, IP64, 10 mm **K.72** Clamping, IP67, 10 mm [1]	**OL** CANopen	**A-F0** Cable axial, 5m **B-F0** Cable radial, 5m

[1] Dust explosion-proof certification (D) only for IP67
[2] If longer cables are required, please see additional ordering information on page 8
* AX70 not available with connection code “B”

ORDERING INFORMATION
DeviceNet

Type	Resolution	Supply voltage	Flange, Protection, Shaft	Interface	Connection [2]
/					
AX70 * Aluminum **AX71** Stainless steel	**0010** 10 Bit ST **0012** 12 Bit ST **0013** 13 Bit ST **0014** 14 Bit ST **1212** 12 Bit MT+12 Bit ST **1213** 12 Bit MT+13 Bit ST **1214** 12 Bit MT+14 Bit ST	**E** DC 10 - 30 V	**K.42** Clamping, IP64, 10 mm **K.72** Clamping, IP67, 10 mm [1]	**VD** DeviceNet	**A-F0** Cable axial, 5m **B-F0** Cable radial, 5m

[1] Dust explosion-proof certification (D) only for IP67
[2] If longer cables are required, please see additional ordering information on page 8
* AX70 not available with connection code “B”

Art. No.: 2-539-240
Version 3 260724TK
© Hengstler GmbH Uhlandstr. 49 D-78554 Aldingen/ Germany
☎+49 74 24 -89 0 Fax +49 74 24 - 89 500
E-mail: info@hengstler.com Internet: www.hengstler.com

Ex Absolute Encoders AX 70 / 71

ORDERING INFORMATION
Selection of cable length

(for all interfaces)

Versions with cable outlet (connection A, B, E or F) are available with various lengths of cable. To order your desired cable length, please add the respective code to the end of your ordering code. Further cable lengths on request.

Code	Cable length
-F0 / without code	5 m
-K0	10 m
-P0	15 m
-U0	20 m
-V0	25 m
-W0	30 m
-X0	40 m
-Y0	50 m

ACCESSORIES

TECHNICAL MANUAL

SOFTWARE

SSI programmable	
Technical Manual German	2 565 287 (or homepage)
Technical Manual English	2 565 289 (or homepage)
Software Win SSI as download from our homepage	www.hengstler.de
Profibus	
GSD-file as download from our homepage	www.hengstler.de
Technical Manual German	2 565 090 (or homepage)
Technical Manual English	2 565 255 (or homepage)
CANopen	
EDS-file as download from our homepage	www.hengstler.de
Technical Manual German	2 565 250 (or homepage)
Technical Manual English	2 565 392 (or homepage)
DeviceNet	
EDS-file as download from our homepage	www.hengstler.de
Technical Manual German	2 565 094 (or homepage)
Technical Manual English	2 565 256 (or homepage)