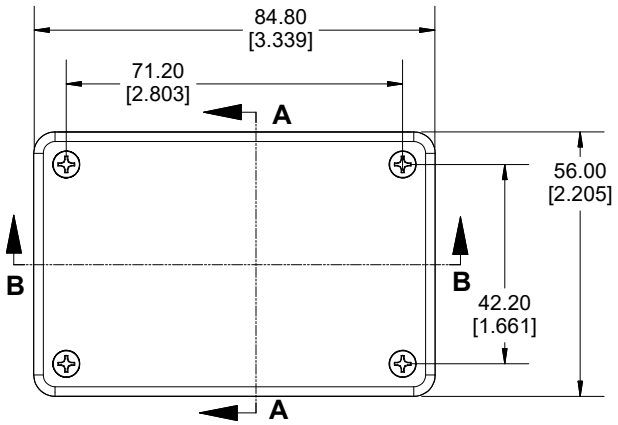

TOP VIEW

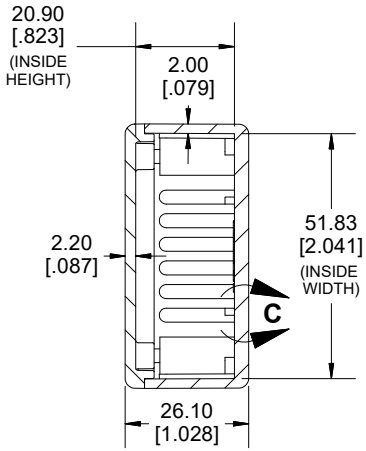

SECTION A-A

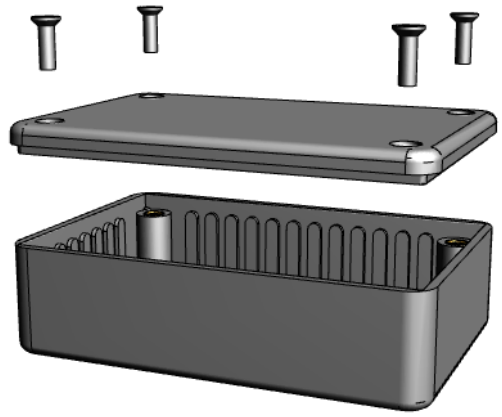

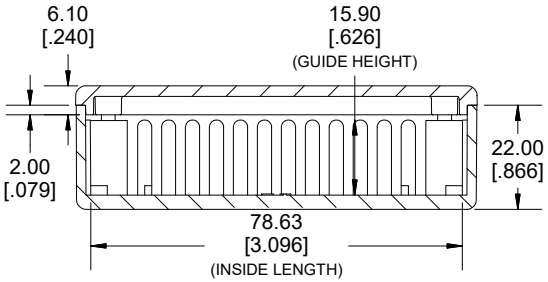

SECTION B-B
SIDE VIEW

DETAIL C

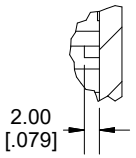

DETAIL D

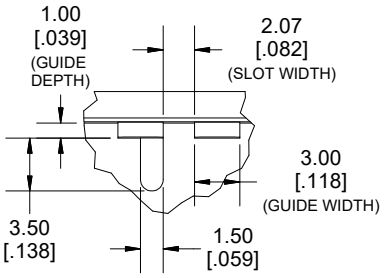

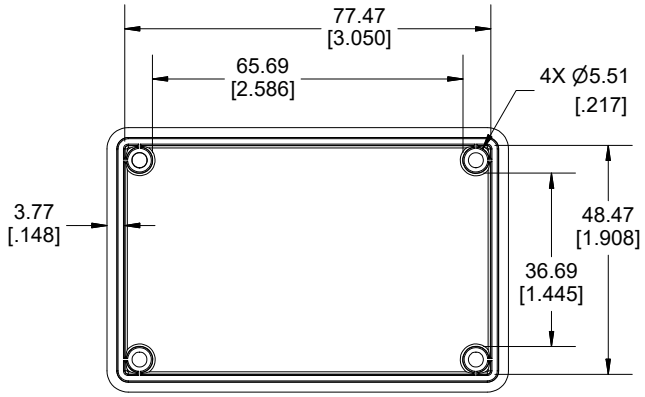

INSIDE LID

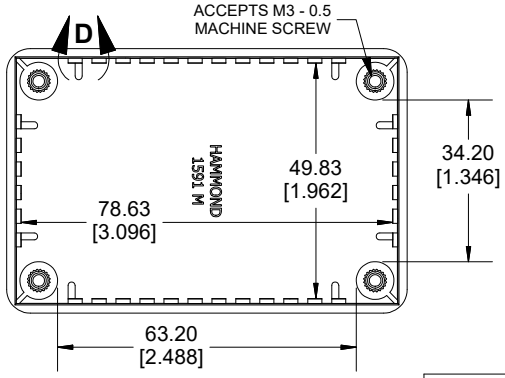

INSIDE BOX

Enclosures can be Factory Modified (Milling, Drilling, Printing etc.)
Contact Factory (modshop@hammfg.com) for quotes
Solid models of this enclosure available in .stp or .x_t
(Part number and text placement/orientation on our products are subject to change, we do not recommend using them as a locating reference for modification purposes)

NOTE
Purchased assembly includes box, lid, 4 cover screws, and pre-installed brass inserts. Enclosure made from FRABS or Polycarbonate.
Recommended Torque: 42-57 ozf.in (30-40 cN.m)

PART NUMBERS		
1591M Enclosure		
Material	**Colour**	**Part Number**
FR ABS UL94 -V0	Beige	1591MBG
	Black	1591MBK
	Blue	1591MBU
	Grey	1591MGY
Accessories		
Plated Cover screw M3 - 0.5 X 10mm (100Pkg)		1591MS100 (Silver)
		1591MS100BK (Black)
PC Board Card Adapters		1591Z6 (6Pkg)
		1591Z50 (50 Pkg)
		1591Z100 (100Pkg)
Nylon Belt / Pocket clip		1599CLIP (Black)
		1599CLIPGY (Grey)
Clear Lids - Flame Retardant Polycarbonate - Lid ONLY		1591MC

Dimensions:
mm
[inches]

HAMMOND MANUFACTURING®
1591M
www.hammondmfg.com

REV: 07.01.2020