MINIATURE HALL EFFECT JOYSTICK

COMPACT DESIGN



Full Boot Shown



Half Boot with P9 Pushbutton Shown

The JHT miniature series Hall Effect joystick's compact design and robust construction is the ideal solution where space is limited and precision control is required. Ideal applications include: robotics, construction equipment, hydraulic controls, medical and surgery equipment, security and surveillance video cameras. The JHT has been tested to five million cycles with no degradation of electrical performance or boot wear. Electronics are sealed to IP68S and the EMI/RFI withstand are per SAE J1113 specifications.

Features:

- **Compact design excellent for armrest & panel mounting**
- **Proven contactless analog output Hall effect technology**
- **5 million operational cycles in all directions**
- **Electronics sealed per IP68S**
- **Single or omni-directional**
- **Optional pushbutton switch(es) available**
- **RoHS/WEEE/Reach compliant**

Standard Characteristics/Ratings:

GENERAL:

Sensor Type:	Hall effect analog, factory programmed ground and supply line break detection; over voltage and reverse voltage protection
Design:	Contactless sensing

ELECTRICAL RATINGS: Rated at Vcc = 5V @ 20°C Load = 1ma (4.7KΩ)

Electrical

	Units	Min	Typ	Max
Supply Voltage	VDC	4.5	5	5.5
Output Voltage Tolerance at Center	VDC @ 5V Vcc	-.25	N/A	+.25
Output Voltage Tolerance Full Travel	VDC @ 5V Vcc	-.25	N/A	+.25
Supply Current* (B = 0, Vcc = 5V, Io = 0)	mA	N/A	10	12
Output Impedance	kΩ	N/A	1	N/A

*Single output per axis. Dual axis per output available. Supply current 20mA typical.

MECHANICAL:

Joystick Mechanical Life:	5,000,000 cycles in all directions
P9 Mechanical Life:	1,000,000 cycles
Travel Angle:	18° min to 22° max, 20° typical
Overtravel Angle:	0.5° min to 1.5° max, 1° typical
Joystick Operating Force:	With bellows, at grip 0.5 lb. min to 1.5 lbs. max over temperature range
P9 Operating Force:	@20°C 8 oz min to 16 oz max, 12 oz typical

ENVIRONMENTAL:

Operating Temp Range:	-40°C to +85°C
Seal:	Electronics seal to IP68S
RFI/EMI:	Withstand per SAE J1113

MATERIALS:

Housing:	Thermoplastic, black
Bellows:	Silicone, black. Additional materials available, contact factory.

JHT PART NUMBER CODE

JHT – XX X X XX X X

Switch/Boot Style
- **11.** With P9 Pushbutton & Full Boot
- **12.** With P9 Pushbutton & Half Boot
- **21.** Without Pushbutton & Full Boot

Gating*
- **1.** Gated, Single axis – Return to Center
- **3.** Omni-directional; Round Smooth Feel
- **4.** Omni-directional; On-Axis and Off-Axis Guided Feel
- **5.** Omni-directional; Round On-Axis Guided Feel

Operating Force
- **1.** 1 lb

Output 1
- **AA.** 2.5 +/- 2.0VDC
- **BB.** 2.5 +/- 2.0VDC
- **CC.** 2.5 +/- 2.0VDC
- **DD.** 2.5 +/- 1.5VDC
- **EE.** 2.5 +/- 1.5VDC
- **FF.** 2.5 +/- 1.5VDC
- **GG.** 0.5 - 4.5VDC
- **HH.** 1.0 - 4.0VDC

Output 2
- NONE
- 2.5 +/- 2.0VDC
- 2.5 -/+ 2.0VDC
- NONE
- 2.5 +/- 1.5VDC
- 2.5 -/+ 1.5VDC
- 0.5 - 4.5VDC
- 1.0 - 4.0VDC

Termination
- **1.** 24 AWG Wire Leads

P9 Button Color**
- **N.** None
- **1.** Red
- **2.** Black
- **3.** Orange
- **4.** Yellow
- **5.** Green
- **6.** Blue
- **7.** Purple
- **8.** Gray
- **9.** White

*Gated = Restricted movement in XY axis only. Gating icons appear on page 69.
**Applies only to half boot with pushbutton option

NOTES:
- Outputs are from the center to the full travel position in each direction.
- Options "AA," "BB," "CC," "DD," "EE" and "FF" provide increased voltage in +X, +Y; and decreasing voltage in -X, -Y direction from one output per axis.
- Options "GG" and "HH" provide increasing voltages in all directions (+X, +Y, -X, -Y) from 2 outputs per axis.
- Options "BB" and "EE" provide redundant output 2 which duplicates output 1. Options "CC" and "FF" provide redundant output 2 which is inverse of output 1.

Specifications Subject To Change Without Notice

MINIATURE HALL EFFECT JOYSTICK

COMPACT DESIGN

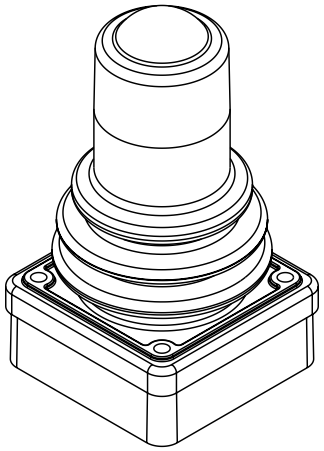

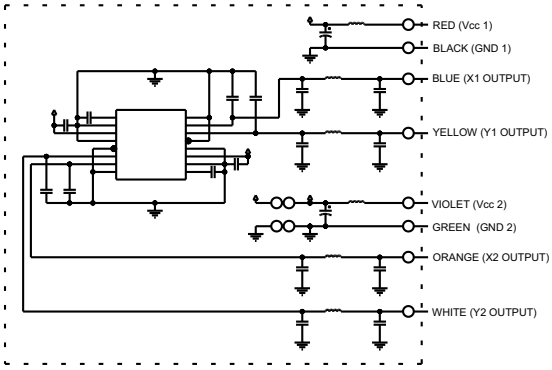

GENERAL SCHEMATIC
(WIRE BUNDLE 1)
ALL OUTPUTS ARE NOT PRESENT IN ALL CONFIGURATIONS

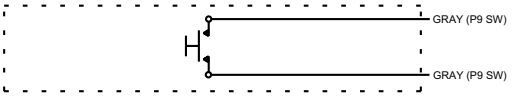

PUSHBUTTON SCHEMATIC
(WIRE BUNDLE 2)
ALL WIRES ARE NOT PRESENT IN ALL CONFIGURATIONS

Full Boot Version Shown

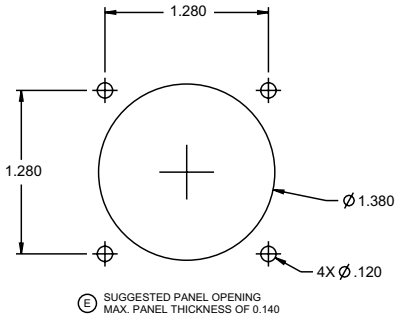

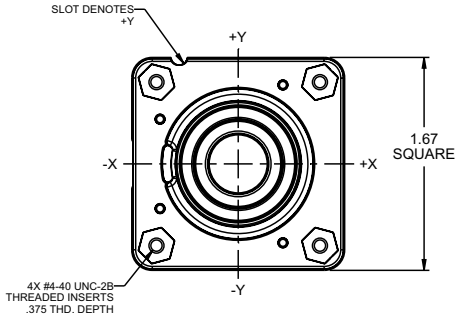

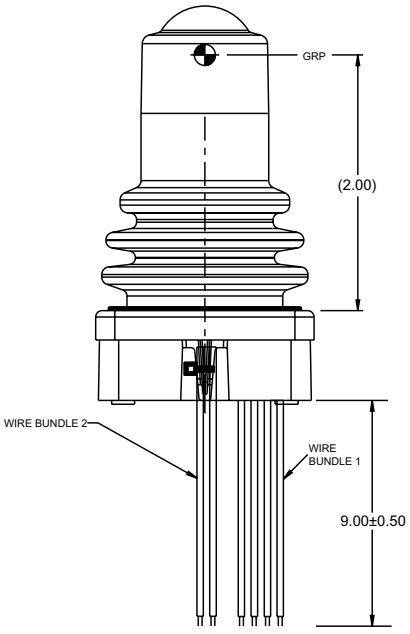

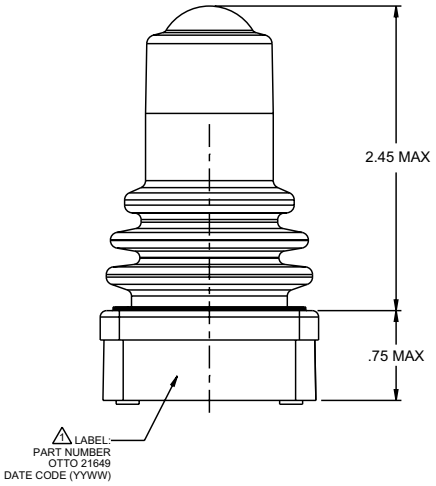

MINIATURE HALL EFFECT JOYSTICK

COMPACT DESIGN

JHT Switch/Style Boot Configuration

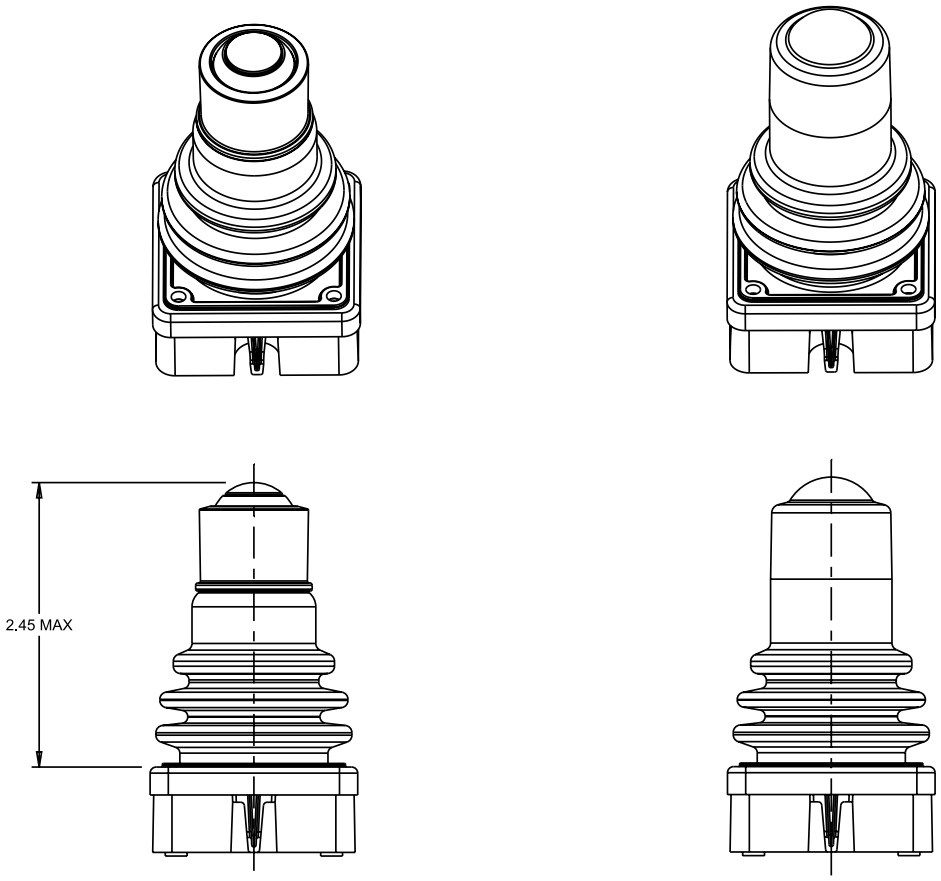

HALF BOOT

FULL BOOT

JHT and JHT Z-Axis Icons Demonstrating Feel*

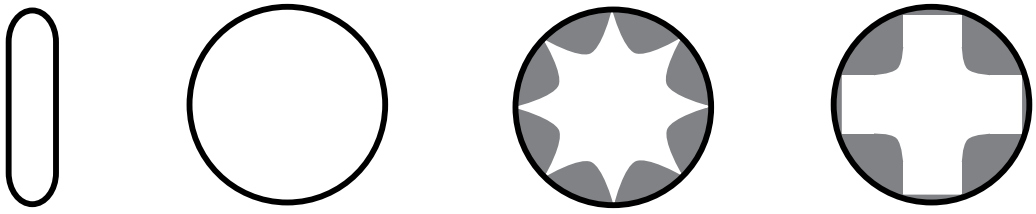

Single Axis

Omnidirectional
Round Smooth Feel

Omnidirectional
On-Axis and Off-Axis
Guided Feel**

Omnidirectional
Round On-Axis
Guided Feel

*Feel defined by shading.
**Full output available in all directions. Contact factory for details.

Specifications Subject To Change Without Notice

MINIATURE HALL EFFECT JOYSTICK

COMPACT DESIGN

OPTION AA

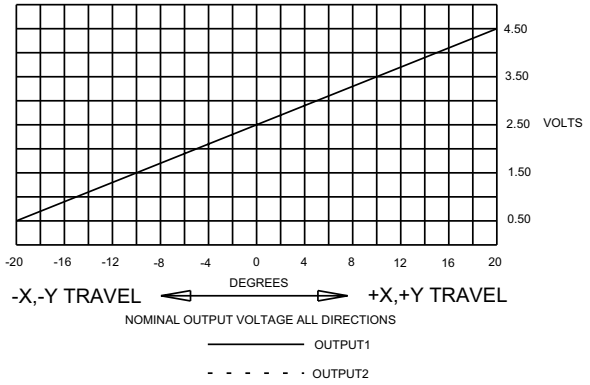

OPTION BB

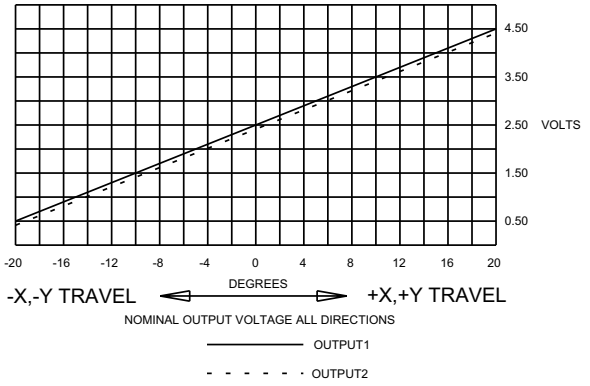

OPTION DD

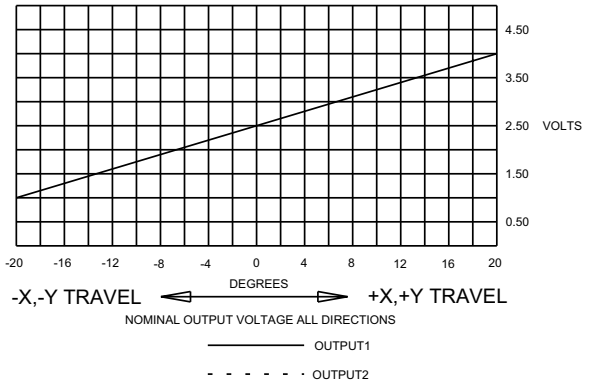

OPTION CC

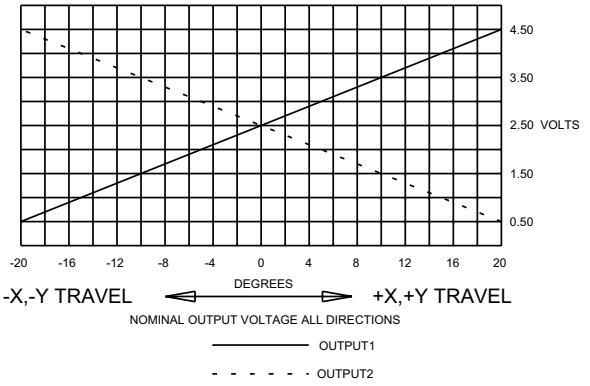

OPTION EE

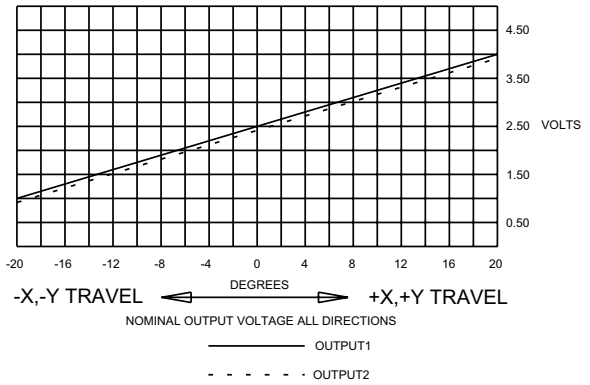

OPTION FF

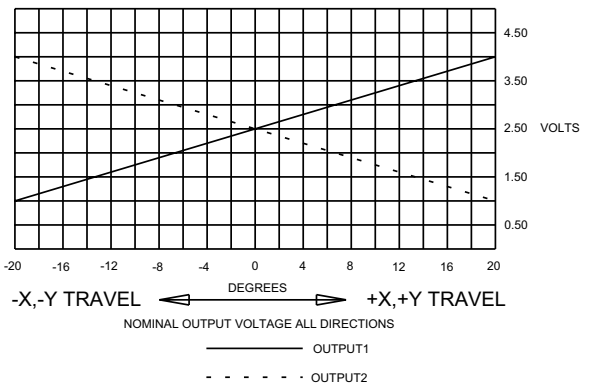

OPTION GG

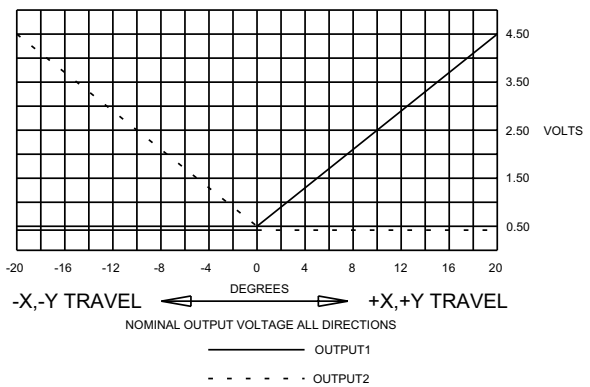

OPTION HH

