IG0351

Inductive sensor

IGB2008-BBOA/SL/LS-100AK RT

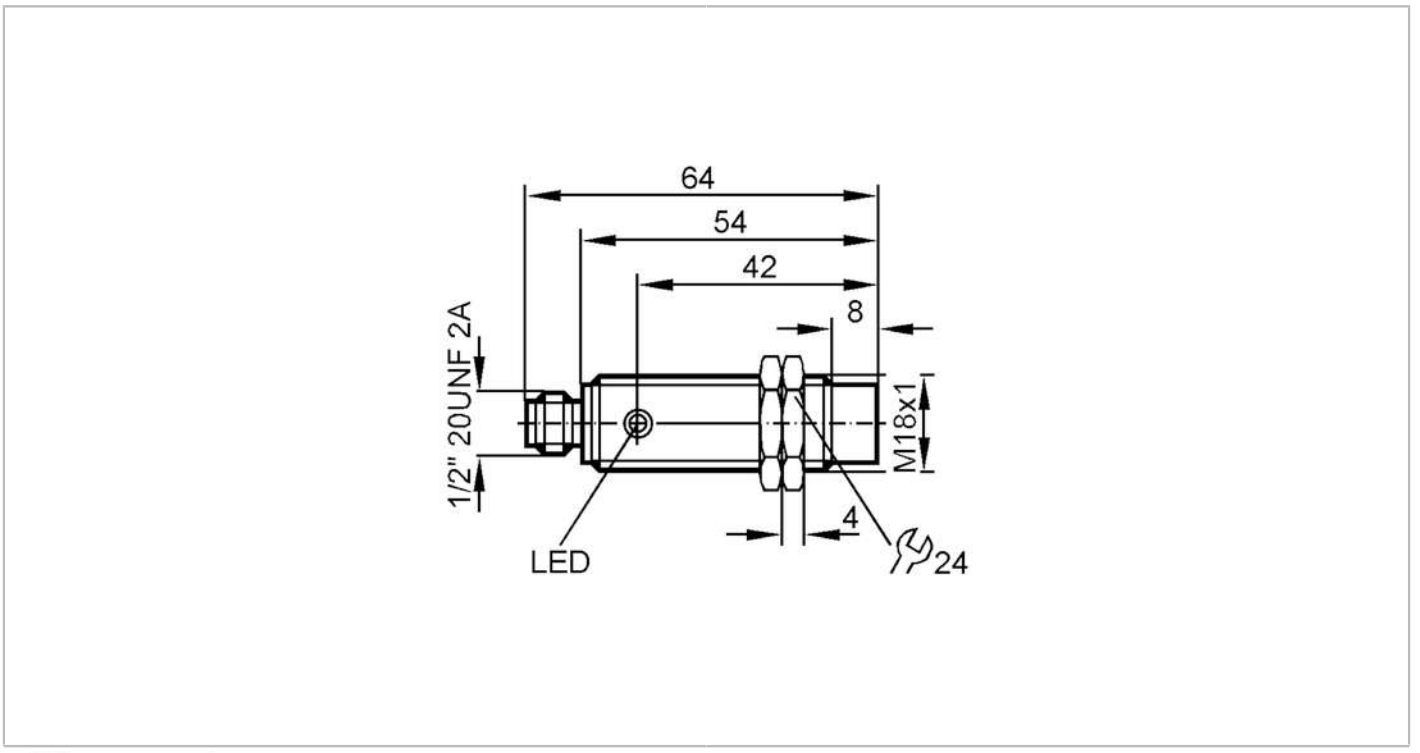

Product characteristics		
Output function		normally closed
Sensing range	[mm]	8
Housing		threaded type
Dimensions	[mm]	M18 x 1
Electrical data		
Operating voltage	[V]	20...250 AC/DC
Protection class		I
Reverse polarity protection		no
Outputs		
Output function		normally closed
Max. voltage drop switching output DC	[V]	6
Max. voltage drop switching output AC	[V]	6.5
Minimum load current	[mA]	5
Max. leakage current	[mA]	2.5 (250 V AC) / 1.3 (110 V AC) / 0.8 (24 V DC)
Permanent current rating of switching output AC	[mA]	250; (350 (...50 °C))
Permanent current rating of switching output DC	[mA]	100
Short-time current rating of switching output	[mA]	2200; (20 ms / 0,5 Hz)
Switching frequency AC	[Hz]	25
Switching frequency DC	[Hz]	100

IG0351

Inductive sensor

IGB2008-BBOA/SL/LS-100AK RT

Short-circuit proof			no
Overload protection			no
Detection zone			
Sensing range	[mm]		8
Real sensing range Sr	[mm]		8 ± 10 %
Operating distance	[mm]		0...6.5
Accuracy / deviations			
Correction factor			steel: 1 / stainless steel: 0.7 / brass: 0.5 / aluminium: 0.4 / copper: 0.3
Hysteresis	[% of Sr]		3...15
Switch point drift	[% of Sr]		-10...10
Operating conditions			
Ambient temperature	[°C]		-25...80
Protection			IP 67
Tests / approvals			
EMC		EN 60947-5-2	
		EN 55011	class B
MTTF	[years]		604
UL approval		Ta	0...40 °C
		Enclosure type	Type 1
		power supply	Hazardous voltage
		File number UL	E174191
Mechanical data			
Weight	[g]		59.6
Housing			threaded type
Mounting			non-flush mountable
Dimensions	[mm]		M18 x 1
Thread designation			M18 x 1
Materials			brass nickel-plated; PC
Displays / operating elements			
Display		switching status	1 x LED, red
Electrical connection			
Required protection			miniature fuse to IEC60127-2 sheet 1; ≤ 2 A; fast acting
Accessories			
Items supplied			lock nuts: 2
Remarks			
Remarks			Recommendation: Check the safe functioning of the unit after a short circuit.
Pack quantity			1 pcs.

IG0351

Inductive sensor

IGB2008-BBOA/SL/LS-100AK RT

Electrical connection - plug

Connector: 1 x 1/2"; coding: C

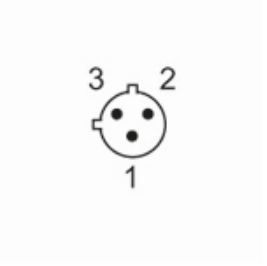

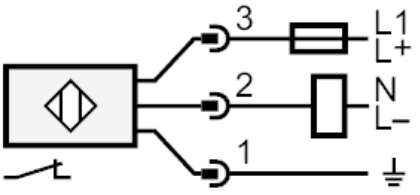

Note miniature fuse to IEC60127-2 sheet 1 ≤ 2 A fast acting