7000 Series
Miniature Toggle Switches

Features/Benefits

- ***Multi-pole and multi-position***
- ***Wide variety of actuator and termination options***
- ***Epoxy terminal-seal compatible with bottom wash cleaning***
- ***RoHS complaint models available***

Typical Applications

- ***Telecommunications***
- ***Instrumentation***
- ***Medical equipment***



c UL us

Specifications

CONTACT RATING: B contact material: 0.4 VA max. @ 20 V AC or DC max. Q contact material: 5 AMPS @ 120 V AC or 28 V DC; 2 AMPS @ 250 V AC. See page F-15 for additional ratings.

ELECTRICAL LIFE: 7X01 and UX1 models: 100,000 make-and-break cycles at full load. All other models: 40,000 cycles.

CONTACT RESISTANCE: Below 10 m Ω typ. initial @ 2-4 V DC, 100 mA, for both silver and gold plated contacts.

INSULATION RESISTANCE: 10^9 Ω min.

DIELECTRIC STRENGTH: 1000 Vrms min. @ sea level.

OPERATING TEMPERATURE: –30°C to 85°C.

SOLDERABILITY: Per MIL-STD-202F method 208D, or EIA RS-186E method 9 (1 hour steam aging).

For materials see page F-4.

NOTE: Any models supplied with P, S R, Q, B or G contact material are RoHS compliant and compatible.

NOTE: Specifications listed above are for switches with standard options. For information on specific and custom switches, consult Customer Service Center.

Build-A-Switch

To order, simply select desired option from each category and place in the appropriate box. Available options are shown and described on pages F–4 thru F–16. For additional options not shown in catalog, consult our Customer Service Center.

Switch Function

7101 SP On-None-On
7103 SP On-Off-On
7105 SP Mom.-Off-Mom.
7107 SP On-Off-Mom.
7108 SP On-None-Mom.
7109 SP None-On-Mom.
7201 DP On-None-On
7203 DP On-Off-On
7205 DP Mom.-Off-Mom.
7207 DP On-Off-Mom.
7208 DP On-None-Mom.
7211 DP On-On-On
7213 DP On-On-Mom.
7215 DP Mom.-On-Mom.
7301 3P On-None-On
7303 3P On-Off-On
7305 3P Mom.-Off-Mom.
7308 3P On-None-Mom.
7401 4P On-None-On
7403 4P On-Off-On
7405 4P Mom.-Off-Mom.
7408 4P On-None-Mom.
7411 4P On-On-On
7413 4P On-On-Mom.
7415 4P Mom.-On-Mom.

Note: UL models available, see pages F-4 & F-5.

Actuator

M .200" high
P3 Flatted, anti-rotation, .450" high
S .420" high
T .687" high, 15/32 bushing
K2 Locking lever, .704" high
K9 Locking lever, .704" high
K12 Locking lever, .732" high
K19 Locking lever, .732" high
L .840" high
L1 .640" high
L1P Anti-rotation, .640" high
L2 .550" high
L2P Anti-rotation, .550" high
L3 Plastic .940" inch
L40 Lever handle without cap
L41 .531" high lever handle with cap
L42 .838" high lever handle with cap
MP Anti-rotation, .200" high
P1 Flatted, anti-rotation, .840" high
P4 Flatted, anti-rotation, .250" high
SP Anti-rotation, .420" high
T1 .487" high, 15/32 bushing
T1P Anti-rotation, .487" high, 15/32 bushing
T2P Flatted, anti-rotation, .610" high, 15/32 bushing,
TP Anti-rotation, .687" high, 15/32 bushing

Bushing

D .280 high, keyway
H .296 high, flat
Y .350 high, keyway
NONE No bushing choice required
CW Splashproof
D8 .280" high, flat
D9 .280" high, keyway
H3 .315" high, keyway
H4 8mm high, keyway
Y1 .378" high, keyway
Y3 8.9mm high, keyway
Y4 .378" high, flat
Y9 .350" high, keyway

Terminations

A Right angle, PC thru-hole
AV2 Vert. right angle, PC thru-hole
C PC Thru-hole
V3 .460 high, V-bracket
Z Solder lug
A2 Right angle, PC thru-hole
A3 Right angle, PC thru-hole
A4 Right angle, PC thru-hole
AW1 Right angle, extended, PC thru-hole
AW4 Right angle, extended, PC thru-hole
V2 .555" high, V-bracket
V4 .630" high, V-bracket
V6 .460" high, V-bracket
V7 .630" high, V-bracket
V8 .953" high, V-bracket
V9 1.150" high, V-bracket
V21 .555" high, snap-in V-bracket
V31 .460" high, snap-in V-bracket
V41 .630" high, snap-in V-bracket
V71 .630" high, snap-in V-bracket
V81 .953" high, snap-in V-bracket
W .750" long, wire wrap
W1 .964" long, wire wrap
W3 .425" long, wire wrap
W4 1.062" long, wire wrap
W5 1.305" long, wire wrap
Z3 Quick connect

Contact Material

B Gold
P Gold, matte-tin
Q Silver
S Silver, matte-tin
G Gold over silver
R Gold over silver, matte-tin

Seal

E Epoxy
I Epoxy potted base

Actuator Color/Finish

NONE Bright chrome
2 Black
3 Red
S Satin chrome

KXX Actuator Color/Finish

NONE Natural aluminum
2 Black anodized aluminum
3 Red anodized aluminum
7 Blue anodized aluminum

Bushing Finish

NONE Nickel on all bushings (except D8, satin chrome)
2 Black

F
Toggle

Dimensions are shown: Inches (mm)
Specifications and dimensions subject to change

7000 Series
Miniature Toggle Switches

Materials

CASE: Glass filled nylon 6/6, flame retardant, heat stabilized, or diallyl phthalate (DAP) (UL 94V-0).

ACTUATOR: Brass, chrome plated.

BUSHING: Brass or zinc, nickel plated.

HOUSING: Stainless steel.

SWITCH SUPPORT: Brass or steel, tin plated.

END CONTACTS: B contact material: Copper alloy, with gold plate over nickel plate. Q contact material: Coin silver, silver plated. See page F-15 for additional contact materials.

CENTER CONTACTS & ALL TERMINALS: B contact material: Copper alloy, with gold plate over nickel plate. Q contact material: Copper alloy, silver plated. See above for additional contact materials.

TERMINAL SEAL: Epoxy.

HARDWARE: Nut & Locking Ring: Brass, nickel plated. Lockwasher: Steel, nickel plated.

NOTE: Materials listed above are for switches with standard options. For information on specific and custom switches, consult Customer Service Center.

SWITCH FUNCTION

NO. POLES	MODEL NO.	UL** MODEL NO.	SWITCH FUNCTION POS. 1	SWITCH FUNCTION POS. 2	SWITCH FUNCTION POS. 3	CONNECTED TERMINALS POS. 1	CONNECTED TERMINALS POS. 2	CONNECTED TERMINALS POS. 3	SCHEMATIC
SP	7101	U11	ON	NONE	ON	2-3	N/A	2-1	
	7103	U13	ON	OFF	ON	2-3	OPEN	2-1	
	7105	U15	MOM.	OFF	MOM.				
	7107	U17	ON	OFF	MOM.				
	7108	U18	ON	NONE	MOM.	2-3	N/A	2-1	
	7109	U19	NONE	ON	MOM.	N/A	2-3	2-1	SPDT

SPDT

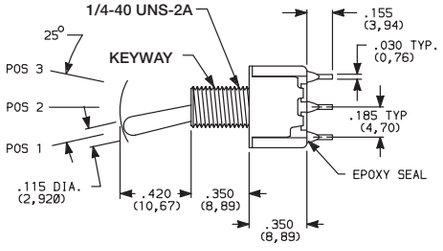

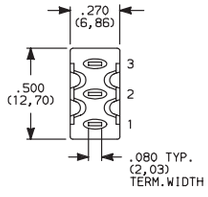

Terminal Numbers For Reference Only

Part number shown: 7101SYZBE

DP	7201	U21	ON	NONE	ON	2-3,5-6	N/A	2-1,5-4	
	7203	U23	ON	OFF	ON	2-3,5-6	OPEN	2-1,5-4	
	7205	U25	MOM.	OFF	MOM.				
	7207	U27	ON	OFF	MOM.				
	7208	U28	ON	NONE	MOM.	2-3,5-6	N/A	2-1,5-4	
	7211 *	U211*	ON	ON	ON	2-3,5-6	2-3,5-4	2-1,5-4	
	7213*	U213*	ON	ON	MOM.				
	7215*	U215*	MOM.	ON	MOM.				DPDT

DPDT

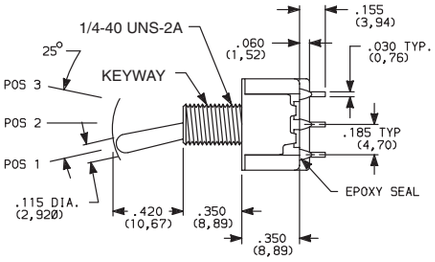

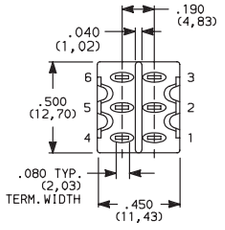

Terminal Numbers For Reference Only

Part number shown: 7201SYZQE

MOM. = Momentary

* Wiring for 3-way switch, see Section N.

** U11–U415 model nos. with all options when ordered with G, R, Q or S contact material.

Third Angle Projection

Dimensions are shown: Inches (mm)
Specifications and dimensions subject to change

SWITCH FUNCTION

NO. POLES	MODEL NO.	UL** MODEL NO.	SWITCH FUNCTION POS. 1	SWITCH FUNCTION POS. 2	SWITCH FUNCTION POS. 3	CONNECTED TERMINALS POS. 1	CONNECTED TERMINALS POS. 2	CONNECTED TERMINALS POS. 3	SCHEMATIC
3P	7301	U31	ON	NONE	ON	2-3,5-6,8-9	N/A	2-1,5-4,8-7	 3PDT
	7303	U33	ON	OFF	ON	2-3,5-6,8-9	OPEN	2-1,5-4,8-7	
	7305	U35	MOM.	OFF	MOM.				
	7307	U37	ON	OFF	MOM.				
	7308	U38	ON	NONE	MOM.	2-3,5-6,8-9	N/A	2-1,5-4,8-7	

3PDT

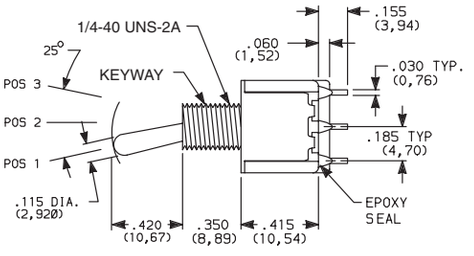

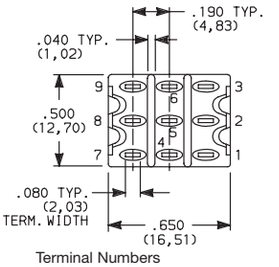

Terminal Numbers For Reference Only

Part number shown: 7301SYZQE

4P	7401	U41	ON	NONE	ON	2-3,5-6,8-9,11-12	N/A	2-1,5-4,8-7,11-10	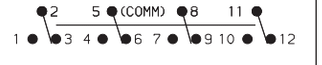 4PDT
	7403	U43	ON	OFF	ON	2-3,5-6,8-9,11-12	OPEN	2-1,5-4,8-7,11-10	
	7405	U45	MOM.	OFF	MOM.				
	7408	U48	ON	NONE	MOM.	2-3,5-6,8-9,11-12	N/A	2-1,5-4,8-7,11-10	
	7411*	U411*	ON	ON	ON	2-3,5-6,8-9,11-12	2-3,5-4,8-9,11-10	2-1,5-4,8-7,11-10	
	7413*	U413*	ON	ON	MOM.				
	7415*	U415*	MOM.	ON	MOM.				

4PDT

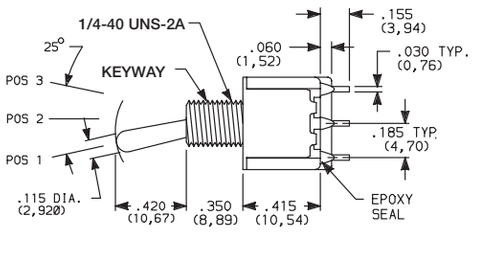

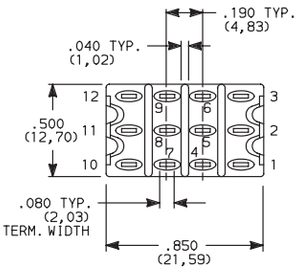

Terminal Numbers For Reference Only

Part number shown: 7401SYZQE

MOM. = Momentary

Wiring for 3-way switch, see Section N.

** U11–U415 model nos. cULus with all options when ordered with G, Q, R or S contact material.

F Toggle

Third Angle Projection

Dimensions are shown: Inches (mm)
Specifications and dimensions subject to change

7000 Series
Miniature Toggle Switches

ACTUATOR

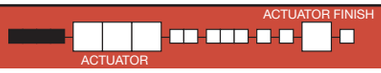

S .420" HIGH [1]

SP ANTIROTATION, .420" HIGH [2,3]

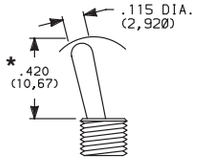

S actuator standard when ordered with C, W-W5, Z & Z3 terminations.
Caps are available separately, see page F-16.

M .200" HIGH [1]

MP ANTIROTATION, .200" HIGH [2,3]

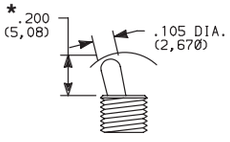

M actuator standard when ordered with all terminations except C, W-W5, Z & Z3.
Caps are available separately, see page F-16.

L, L1, L2 .840", .640", .550" HIGH [1]

L1P, L2P ANTIROTATION, .840", .640", .550" HIGH [2,3]

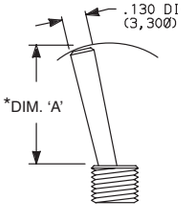

OPTION CODE	DIM 'A'
L	.840 (21,34)
L1, L1P	.640 (16,26)
L2, L2P	.550 (13,97)

Caps are available separately, see page F-16.

***P1** FLATTED WITH ANTIROTATION, .840" HIGH [2,3]

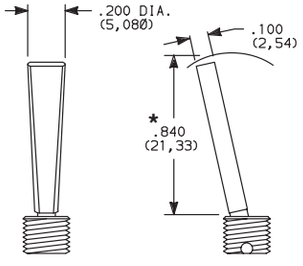

***P3** FLATTED WITH ANTIROTATION, .450" HIGH [2,3]

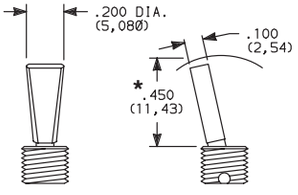

***P4** FLATTED WITH ANTIROTATION, .250" HIGH [2,3]

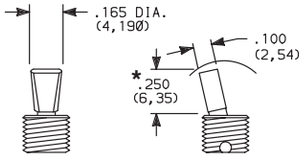

*Dress nut part number 709901201 supplied standard with threaded bushing. (Part number 709903201 with metric threaded bushings.)

T .687 (17,45) HIGH [1,2]

TP ANTIROTATION, .687 (17,45) HIGH, 15/32 BUSHING [1,2,3]

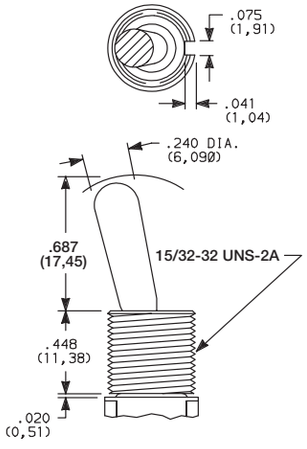

T1 .487 (12,37) HIGH [1,2]

T1P ANTIROTATION, .487 (12,37) HIGH, 15/32 BUSHING [1,2,3]

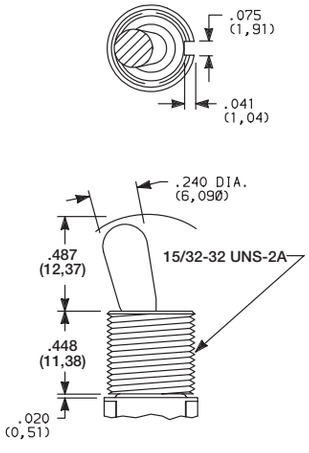

Bushing option code not required unless CW splashproof bushing ordered. TP & T1P actuators not available with CW splashproof bushing. All TXX actuators not available on single pole models with A-A4, AW1-AW4 terminations.

T2P FLATTED, ANTIROTATION, .610" HIGH, 15/32 BUSHING [1,2,3]

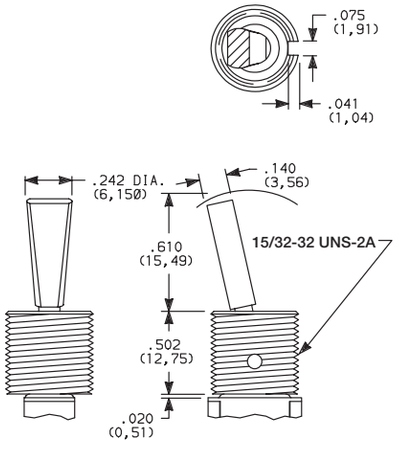

Bushing option code not required. T2P actuator not available with CW splashproof bushing or single pole models with A-A4, AW1-AW4 terminations.

[1] L, L1, L2, M, S & TXX actuators not available with Y1 bushing.

[2] L1P, L2P, MP, P1, P3, P4, SP & TXX actuators not available with D8 & H4 bushing.

[3] Antirotation: Provides anti-'push-in' feature on actuator.

* Add .070 (1,78) for D, D8 & D9 bushings, subtract .020 (0,51) for H3 bushing.

OPTION CODE	ACTUATOR FINISH
NONE	BRIGHT CHROME-With Nickel Plated Bushing
2	BLACK
S	SATIN CHROME

NOTE: Black hardware is supplied when either black actuators or bushings are specified. For additional hardware, see Section N.

Third Angle Projection

Dimensions are shown: Inches (mm)
Specifications and dimensions subject to change

ACTUATOR

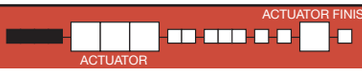

K2 LOCKING LEVER, .704" HIGH (threaded)

K9 LOCKING LEVER, .704" HIGH (unthreaded)

K12 LOCKING LEVER, .732" HIGH (threaded)

K19 LOCKING LEVER, .732" HIGH (unthreaded)

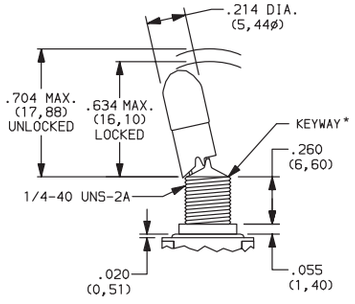

Replaces K, K8

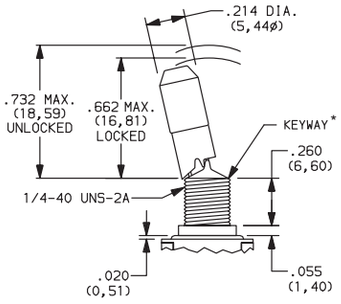

Replaces K1, K18

OPTION CODE	ACTUATOR CAP FINISH
NONE	NATURAL ALUMINUM–With Nickle Plated Bushing
2	BLACK ANODIZED ALUMINUM
3	RED ANODIZED ALUMINUM
7	BLUE ANODIZED ALUMINUM

* All KXX models including KXXCW have a keyway

Locking Positions



–01 Models
2 Position lock

–03 & –11 Models
3 Position lock

–05, –09 & –15 Models
1 Position lock

–07 & –13 Models
2 Position lock

–08 Models
1 Position lock

NOTE: To prevent accidental actuation, toggle must be lifted before being actuated. When released, toggle will lock in place. Overtightening mounting nut may cause actuator to bind.

Locking levers supplied with bushing shown.

Bushing option code not required unless CW splashproof bushing ordered.

L40 LEVER HANDLE WITHOUT CAP

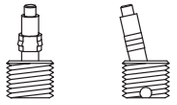

No color choice required

L41 PLASTIC LEVER HANDLE WITH ANTIROTATION AND CAP, P/N 4810

L42 PLASTIC LEVER HANDLE WITH ANTIROTATION AND CAP, P/N 4811

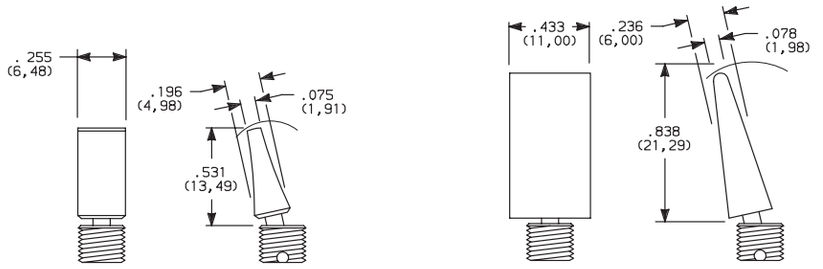

Finish: Matte (L41 & L42).

L3 PLASTIC .940" HIGH

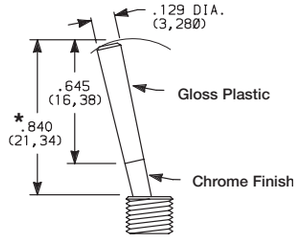

OPTION CODE	PLASTIC ACTUATOR COLORS
NONE	No Actuator Color (L40 option)
2	BLACK
3	RED

* Add .070 (1,78) for D, D8 & D9 bushings, subtract .020 (0,51) for H3 bushing.

NOTE: Lever handle for L41 & L42 actuators supplied, but not installed. For interchangeability, order L40 actuator option and lever handles separately, see page F-16. L4X actuators not available with H4, Y1, Y4 bushings. Antirotation: Provides anti-'push-in' feature on actuator.

Third Angle Projection

Dimensions are shown: Inches (mm)
Specifications and dimensions subject to change

7000 Series
Miniature Toggle Switches

BUSHING

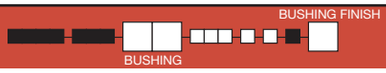

Y .350" HIGH, THREADED, KEYWAY

Y9 .350" HIGH, UNTHREADED, KEYWAY

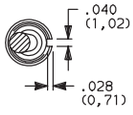

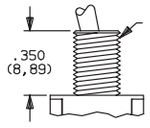

Y bushing standard with C, W-W5, Z or Z3 terminations.

NONE NO BUSHING

No bushing choice required with KXX, TXX actuators. (exception: Specify CW if splashproof bushing desired).

D .280" HIGH, THREADED, KEYWAY

D8 .280" HIGH, UNTHREADED, FLAT [3]

D9 .280" HIGH, UNTHREADED, KEYWAY

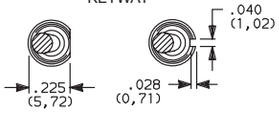

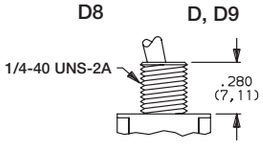

D9 bushing standard with all terminations except C, W-W5, Z or Z3. Add .070 (1,78) to all actuators lengths with D, D8 & D9 bushings.

H .296" HIGH, FLAT THREADED, HIGH TORQUE [1,2]

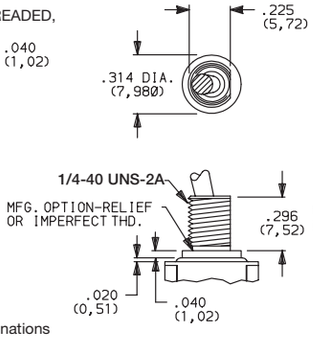

H3 .315" HIGH, KEYWAY THREADED, HIGH TORQUE [1,2]

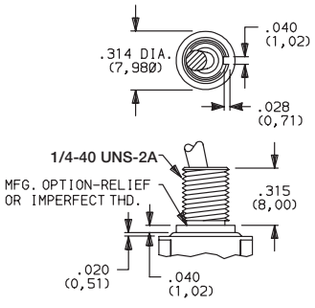

Subtract .020 (0,51) from all actuator lengths for H3 bushing.

H4 8mm HIGH, KEYWAY, THREADED, METRIC HIGH TORQUE [1,2,3]

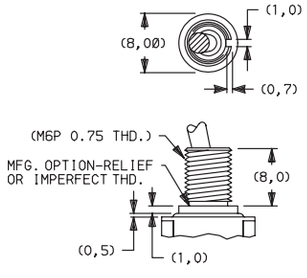

Y1 .378" HIGH, KEYWAY, THREADED, HIGH TORQUE [1,2,4]

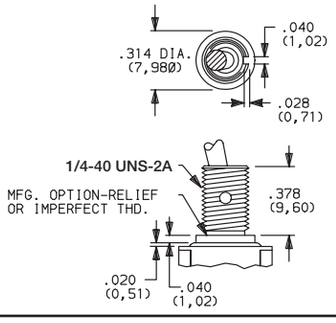

Y3 8.9mm HIGH, KEYWAY, THREADED, METRIC

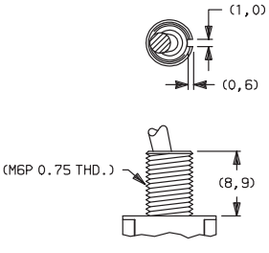

Y4 .378" HIGH, FLAT, THREADED, HIGH TORQUE [1,2,5]

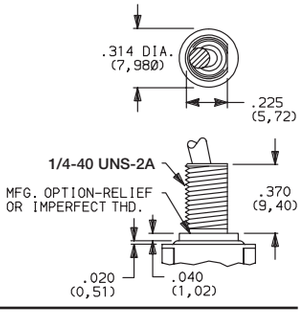

CW THREADED, SPLASHPROOF [1,2]

For T & T1 actuators.

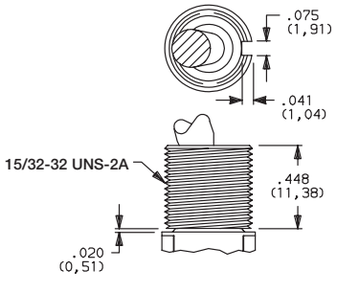

IP67 Degree of protection, totally protected against dust, full-scale voltage protection, temporary immersion. Internal actuator seal standard.
External bushing seal available separately from APM Hexseal, part # MFS-60064.

For actuators other than T, T1 and KXX.

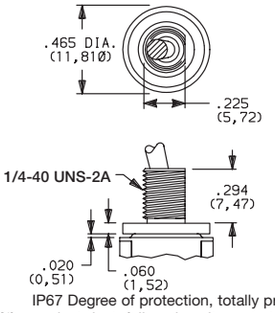

IP67 Degree of protection, totally protected against dust, full-scale voltage protection, temporary immersion. Internal actuator seal and external bushing seal washer standard. IP65 degree of protection for LXP, MP, PX or SP with CW option.

OPTION CODE	BUSHING FINISH
NONE	NICKEL on all bushings except 'D8' satin chrome.
2	BLACK

[1] Will withstand 12 in.-lbs. of torque with no distortion.

[2] CW. H, H3, H4, Y1 & Y4 bushings not available on single pole models with A4 terminations.

[3] D8 & H4 bushings available only with L, L1, L2, M & S actuators.

[4] Y1 bushing available only with LXP, MP, PX & SP actuators.

[5] Y4 bushing not available with L4X actuators.

NOTE: Two mounting nuts, locking ring and lockwasher supplied standard with threaded bushings. Black hardware is supplied when either black bushings or actuators are specified. Optional mounting nut and locking ring styles and finishes available, see Section N.

PANEL MOUNTING

1/4 INCH BUSHING | METRIC BUSHING | 15/32 INCH BUSHING

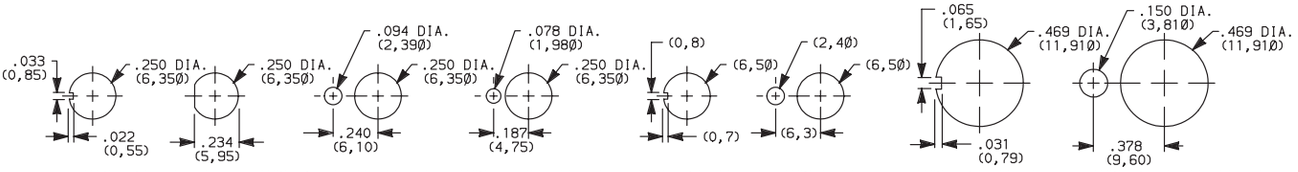

Without locking ring. | With standard locking ring. | With small locking ring. | Without locking ring. | With locking ring. | Without locking ring. | With standard locking ring.

Third Angle Projection

Dimensions are shown: Inches (mm)
Specifications and dimensions subject to change

TERMINATIONS

Z SOLDER LUG

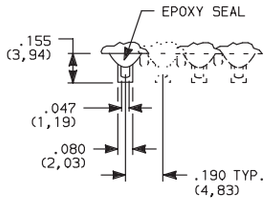

.030 (0,76) Thk.

SPDT thru 4PDT

Not available with P, R or S contact materials.

C PC THRU-HOLE

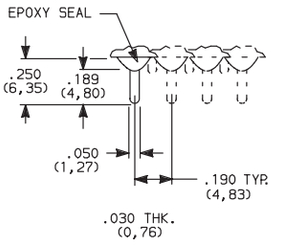

PC MOUNTING

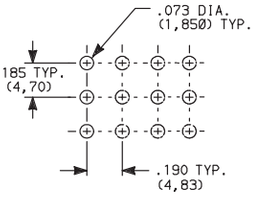

SPDT thru 4PDT

Z3 QUICK CONNECT

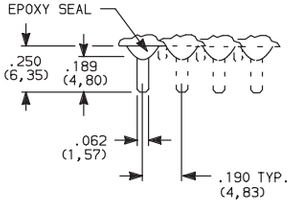

.030 (0,76) Thk.

Not available with P, R or S contact materials.
Mating quick connector available, order part number 530100000, page F-16.

SPDT thru 4PDT

W, W1, W3, W4, W5 WIRE WRAP

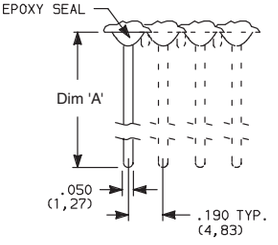

.030 (0,76) Thk.

OPTION CODE	DIM 'A'
W	.750 (19,05)
W1	.964 (24,48)
W3	.425 (10,80)
W4	1.062 (26,97)
W5	1.305 (33,15)

SPDT thru 4PDT

A RIGHT ANGLE, PC THRU-HOLE

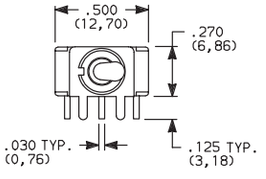

Actuator Shown In Pos. 1

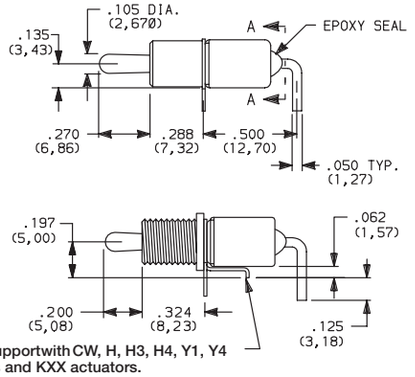

Switch support with CW, H, H3, H4, Y1, Y4 bushings and KXX actuators.

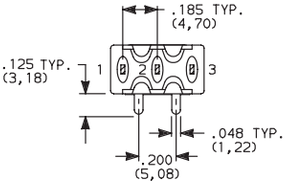

SECTION A-A

Terminal Nos. For Reference Only



7101MD9ABE
Horizontal Actuation
SPDT

Part No. Shown: 7101MHABE

A3 RIGHT ANGLE, SNAP-IN, PC THRU-HOLE

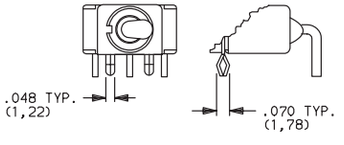

Not available with I seal option.
Terminal bend radii and lead-in manufacturing option.

AW1, AW4 RIGHT ANGLE, EXTENDED, PC THRU-HOLE

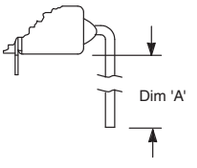

OPTION CODE	DIM 'A'
AW1	.72 (18,3)
AW4	.83 (21,1)

PC MOUNTING

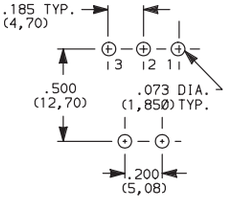

Third Angle Projection

Dimensions are shown: Inches (mm)
Specifications and dimensions subject to change

7000 Series
Miniature Toggle Switches

TERMINATIONS

A RIGHT ANGLE, PC THRU-HOLE



7201MD9ABE
Horizontal Actuation
DPDT

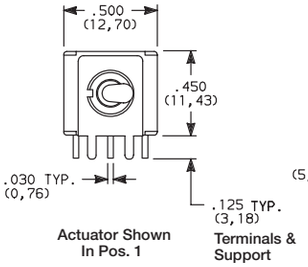

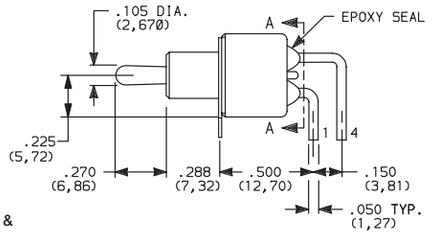

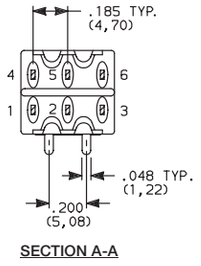

SECTION A-A

A3 RIGHT ANGLE, SNAP-IN, PC THRU-HOLE

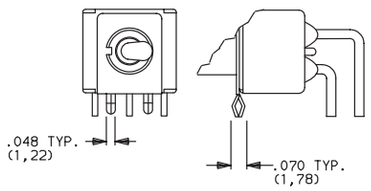

AW1, AW4 RIGHT ANGLE, EXTENDED, PC THRU-HOLE

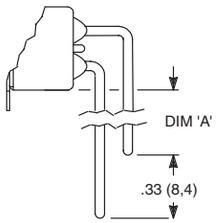

OPTION CODE	DIM 'A'
AW1	.40 (10,2)
AW4	.50 (12,7)

PC MOUNTING

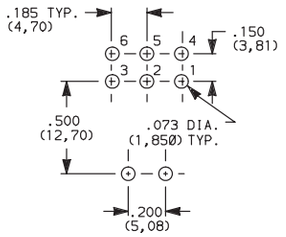

Not available with I seal option.
Terminal bend radii and lead-in manufacturing option.

A RIGHT ANGLE, PC THRU-HOLE



7301MD9ABE
Horizontal Actuation
3PDT

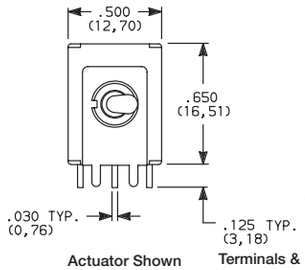

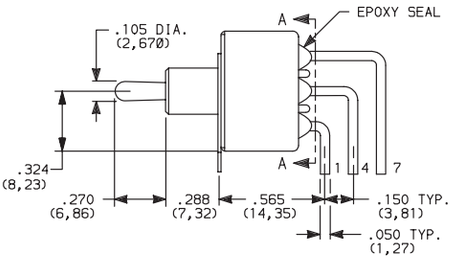

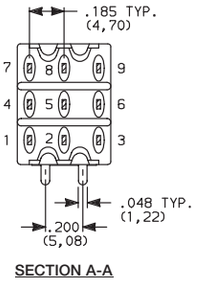

SECTION A-A

AW4 RIGHT ANGLE, EXTENDED, PC THRU-HOLE

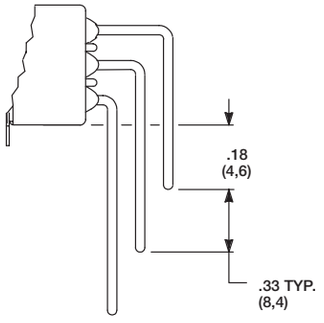

PC MOUNTING

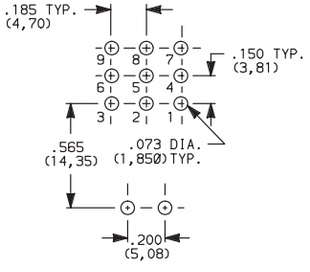

Not available with I seal option.
Terminal bend radii and lead-in manufacturing option.

F
Toggle

Dimensions are shown: Inches (mm)
Specifications and dimensions subject to change

TERMINATIONS

A2 RIGHT ANGLE, PC THRU-HOLE, .156" PITCH

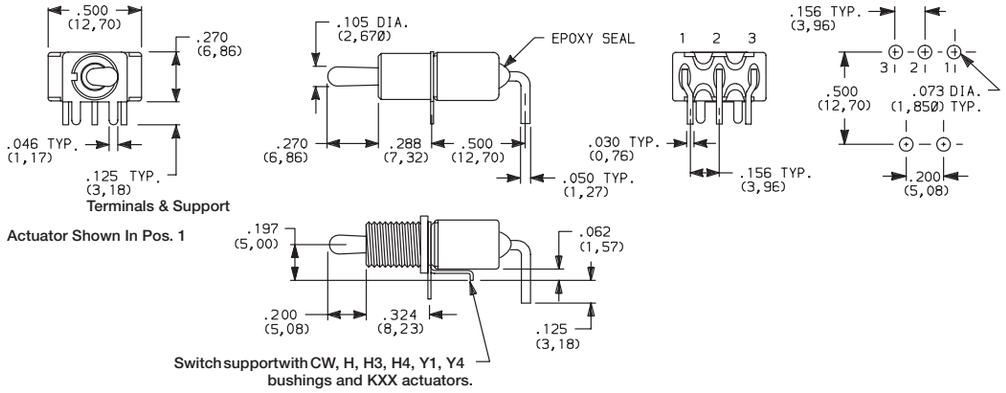



7101MHA2BE
Horizontal Actuation
SPDT

Not available with TXX actuators and I seal.
Terminal bend radii and lead-in manufacturing option.

Part No. Shown: 7101MHA2BE

A4 RIGHT ANGLE, PC THRU-HOLE .156" PITCH

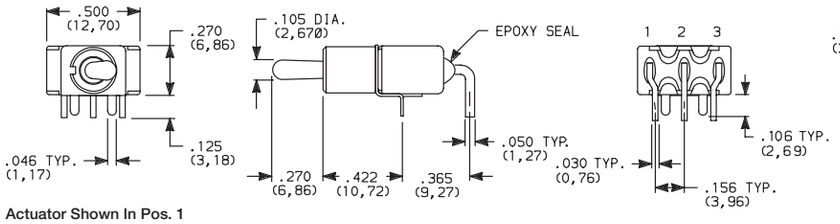



7101MD9A4BE
Horizontal Actuation
SPDT

Actuator Shown In Pos. 1

Not available with KXX & TXX actuators, CW, H, H3, H4, Y1 & Y4 bushings, and I seal. Terminal bend radii and lead-in manufacturing option.

NOTE: The A4 option is available with any contact material and can be UL recognized and CSA certified. The PC pattern must clear switch support legs.

AV2 VERTICAL RIGHT ANGLE, PC THRU-HOLE, .150" PITCH

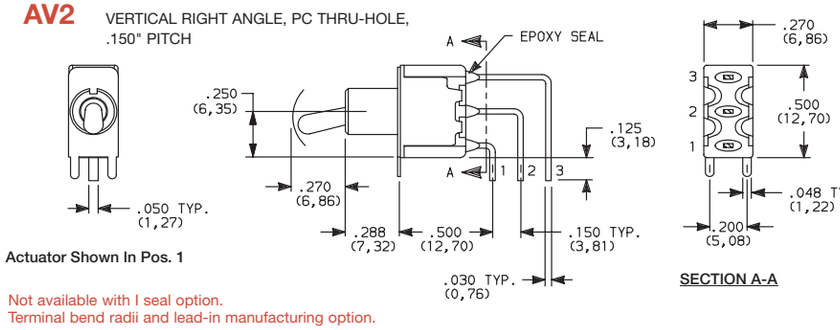



7101MD9AV2BE
Horizontal Actuation
SPDT

Actuator Shown In Pos. 1

Not available with I seal option.
Terminal bend radii and lead-in manufacturing option.

AV2 VERTICAL RIGHT ANGLE, PC THRU-HOLE, .150" PITCH

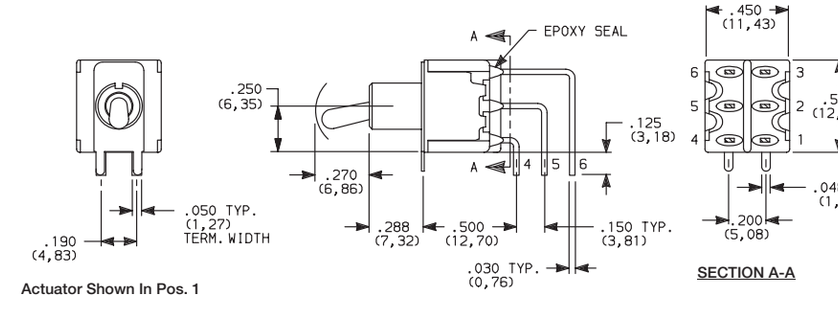



7201MD9AV2BE
Vertical Actuation
DPDT

Actuator Shown In Pos. 1

Not available with I seal option.
Terminal bend radii and lead-in manufacturing option.

Third Angle Projection

Dimensions are shown: Inches (mm)
Specifications and dimensions subject to change

7000 Series
Miniature Toggle Switches

TERMINATIONS

AV2 VERTICAL RIGHT ANGLE, PC THRU-HOLE, .150" PITCH



7301MD9AV2BE
Vertical Actuation
3PDT

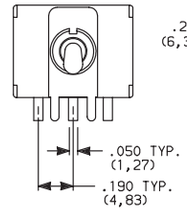

Actuator Shown In Pos. 1

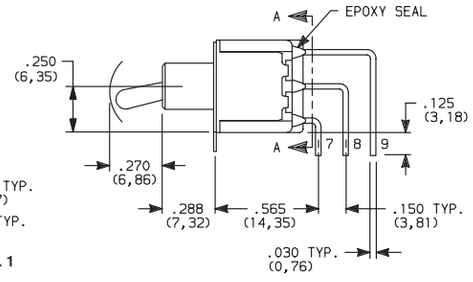

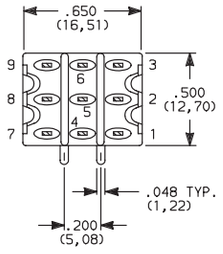

SECTION A-A

PC MOUNTING

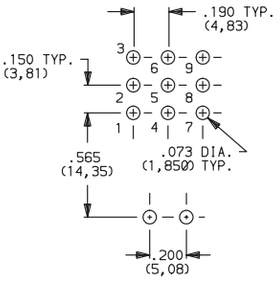

Not available with I seal option.
Terminal bend radii and lead-in manufacturing option.

AV2 VERTICAL RIGHT ANGLE, PC THRU-HOLE, .150" PITCH



7401MD9AV2BE
Vertical Actuation
4PDT

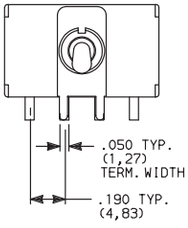

Actuator Shown In Pos. 1

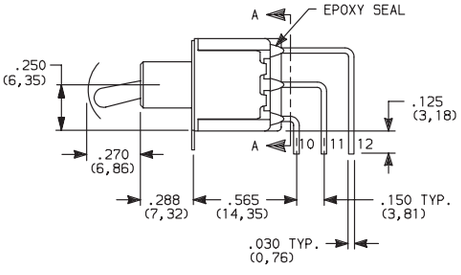

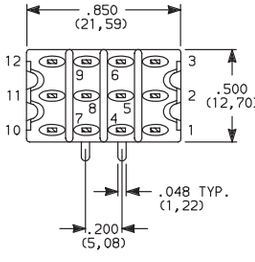

SECTION A-A

PC MOUNTING

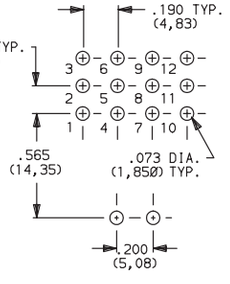

Not available with I seal option.
Terminal bend radii and lead-in manufacturing option.

V2, V6, V7, V8 VERTICAL MOUNT, V-BRACKET
V21, V71, V81 VERTICAL MOUNT, V-BRACKET, SNAP-IN



7101MD9__BE
SPDT

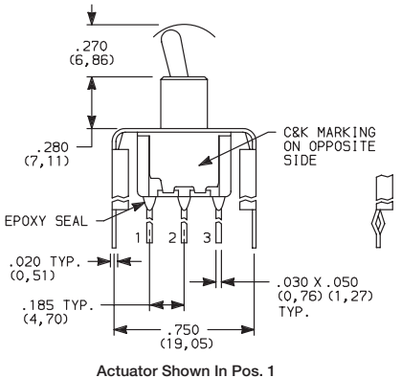

Actuator Shown In Pos. 1

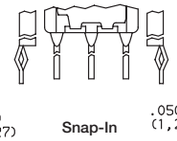

Snap-In

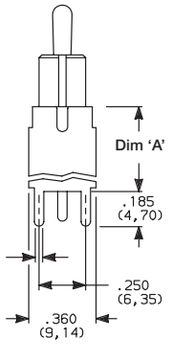

PC MOUNTING

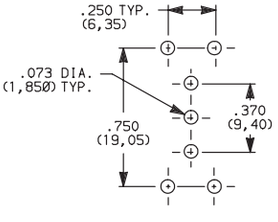

OPTION CODE	DIM 'A'
V2, V21	.555 (14,10)
V6	.460 (11,68)
V7, V71	.630 (16,00)
V8, V81	.953 (24,21)

Not available with I seal option.

Third Angle Projection

Dimensions are shown: Inches (mm)
Specifications and dimensions subject to change

TERMINATIONS

V2, V6, V7, V8 VERTICAL MOUNT, V-BRACKET
V21, V61, V71, V81 VERTICAL MOUNT, V-BRACKET, SNAP-IN

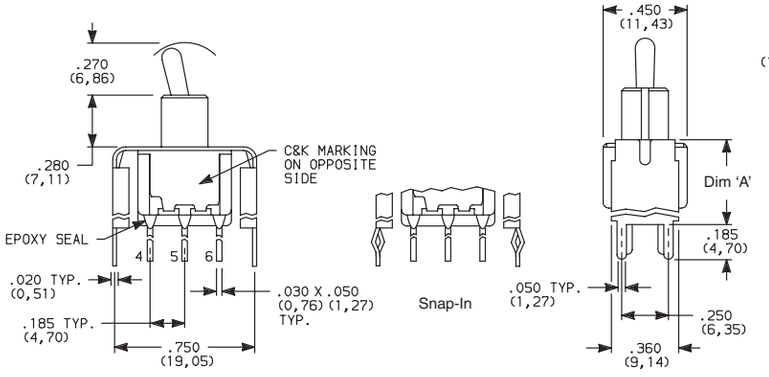

Actuator Shown In Pos. 1

Not available with I seal option.

PC MOUNTING

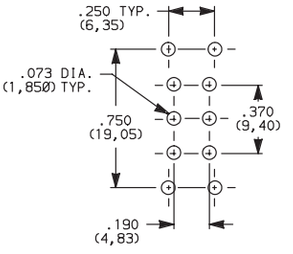

OPTION CODE	DIM 'A'
V2, V21	.555 (14,10)
V6, V61	.460 (11,68)
V7, V71	.630 (16,00)
V8, V81	.953 (24,21)



7201MD9__BE
DPDT

V2, V7, V8 VERTICAL MOUNT, V-BRACKET
V21, V71, V81 VERTICAL MOUNT, V-BRACKET, SNAP-IN

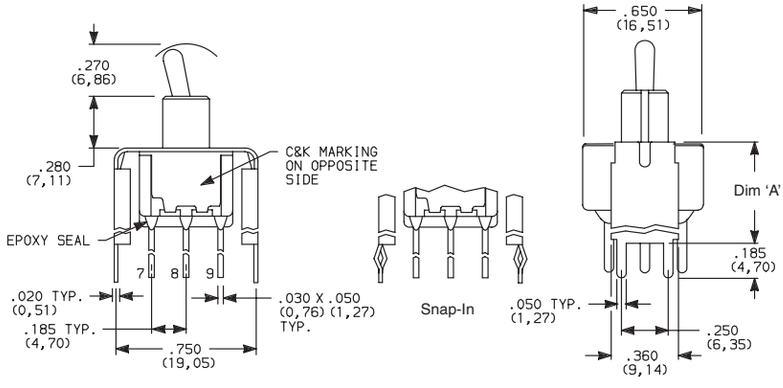

Actuator Shown In Pos. 1

Not available with I seal option.

PC MOUNTING

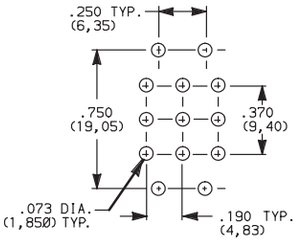

OPTION CODE	DIM 'A'
V2, V21	.555 (14,10)
V7, V71	.630 (16,00)
V8, V81	.953 (24,21)



7301MD9__BE
3PDT

V2, V7, V8 VERTICAL MOUNT, V-BRACKET
V21, V71, V81 VERTICAL MOUNT, V-BRACKET, SNAP-IN

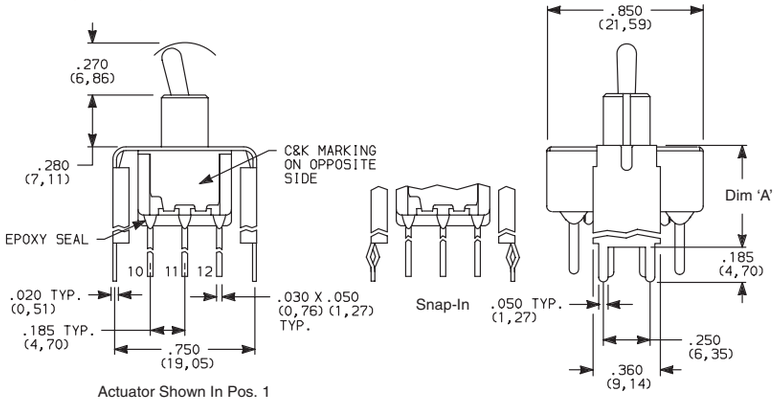

Actuator Shown In Pos. 1

Not available with I seal option.

PC MOUNTING

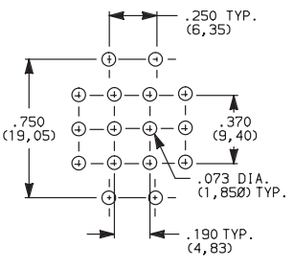

OPTION CODE	DIM 'A'
V2, V21	.555 (14,10)
V7, V71	.630 (16,00)
V8, V81	.953 (24,21)



7401MD9__BE
4PDT

Third Angle Projection

Dimensions are shown: Inches (mm)
Specifications and dimensions subject to change

7000 Series
Miniature Toggle Switches

TERMINATIONS

V3, V4, V9 VERTICAL MOUNT, V-BRACKET

V31, V41 VERTICAL MOUNT, V-BRACKET, SNAP-IN



7101MD9__BE
SPDT

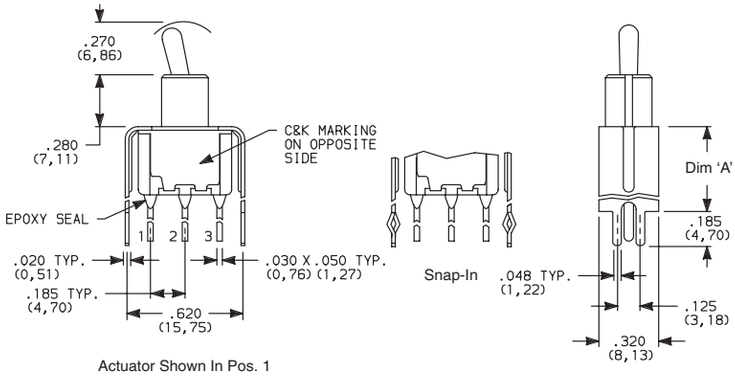

Actuator Shown In Pos. 1

Not available with I seal option.

PC MOUNTING

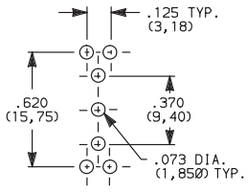

OPTION CODE	DIM 'A'
V3, V31	.460 (11,68)
V4, V41	.630 (16,00)
V9	1.150 (29,21)

V3, V4, V9 VERTICAL MOUNT, V-BRACKET

V31, V41 VERTICAL MOUNT, V-BRACKET, SNAP-IN

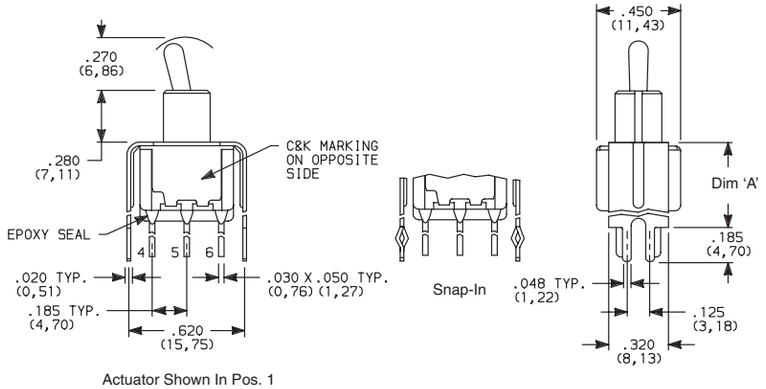

Actuator Shown In Pos. 1

Not available with I seal option.

PC MOUNTING

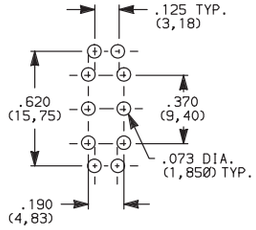



7201MD9__BE
DPDT

OPTION CODE	DIM 'A'
V3, V31	.460 (11,68)
V4, V41	.630 (16,00)
V9	1.150 (29,21)

V4, V9 VERTICAL MOUNT, V-BRACKET

V41 VERTICAL MOUNT, V-BRACKET, SNAP-IN

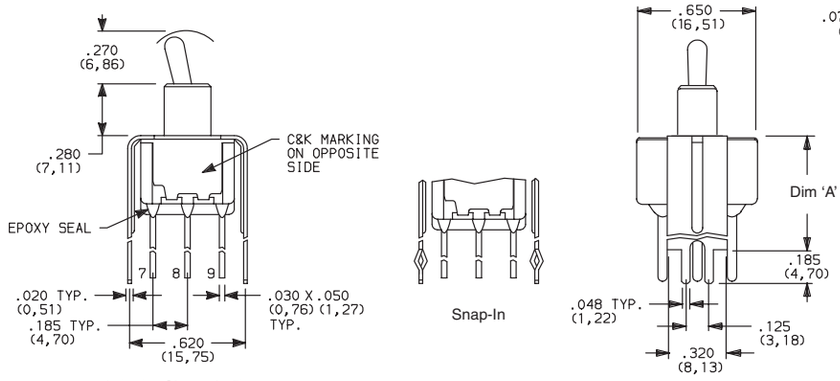

Actuator Shown In Pos. 1

Not available with I seal option.

PC MOUNTING

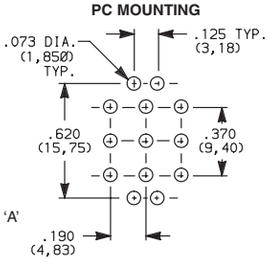



7301MD9__BE
3PDT

OPTION CODE	DIM 'A'
V4, V41	.630 (16,00)
V9	1.150 (29,21)

Third Angle Projection

Dimensions are shown: Inches (mm)
Specifications and dimensions subject to change

TERMINATIONS

V4, V9 VERTICAL MOUNT, V-BRACKET

V41 VERTICAL MOUNT, V-BRACKET, SNAP-IN

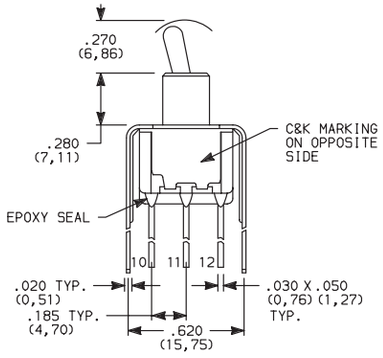

Actuator Shown In Pos. 1

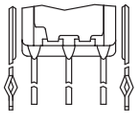

Snap-In

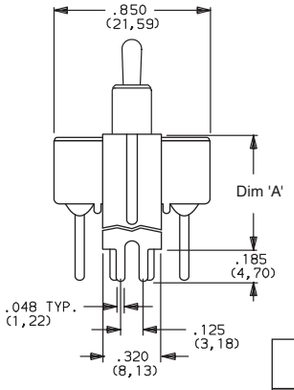

PC MOUNTING

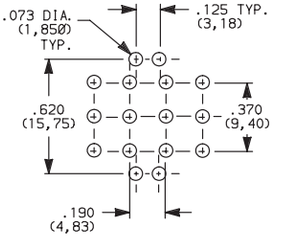

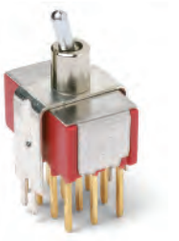

7401MD9__BE
4PDT

OPTION CODE	DIM 'A'
V4, V41	.630 (16,00)
V9	1.150 (29,21)

Not available with I seal option.

CONTACT MATERIAL

OPTION CODE	CONTACT MATERIAL	TERMINAL PLATING	RATINGS	
B	GOLD [1]	GOLD [1]	LOW LEVEL/ DRY CIRCUIT	0.4 VA MAX. @ 20 V AC OR DC MAX.
P		MATTE-TIN [6]		
Q	SILVER [4,5]	SILVER [5]	POWER	5 AMPS @ 120 V AC OR 28 V DC; 2 AMPS @ 250 V AC.
S		MATTE-TIN [6]		
G	GOLD OVER SILVER [2,3]	GOLD [3]	LOW LEVEL/DRY CIRCUIT OR POWER	0.4 VA MAX @ 20 V AC OR DC MAX. OR 5 AMPS @ 120 V AC OR 28 V DC; 2 AMPS @ 250 V AC.
R		MATTE-TIN [6]		

* Note: See Technical Data section of this catalog for RoHS compliant and compatible definitions and specifications.

[1] CONTACTS & TERMINALS: Copper alloy, with gold plate over nickel plate.

[2] END CONTACTS: Coin silver, with gold plate over nickel plate.

[3] CENTER CONTACTS & ALL TERMINALS: Copper alloy, with gold plate over nickel plate.

[4] END CONTACTS: Coin silver, silver plated.

[5] CENTER CONTACT & ALL TERMINALS: Copper alloy, silver plated.

[6] TERMINALS: Copper alloy, with matte tin alloy nickel plate.

NOTE: Any models supplied with P, S, R, Q, B or G contact material are RoHS compliant.

U11-U415 model numbers c UL us with all options when ordered with G, S, R, or Q contact material.

B contact material standard with all terminations except C, Z & Z3.

Q contact material standard with C, Z & Z3 terminations.

P, S & R contact materials not available with Z & Z3 terminations.

Third Angle Projection

Dimensions are shown: Inches (mm)
Specifications and dimensions subject to change

7000 Series
Miniature Toggle Switches

SEAL

E EPOXY SEAL

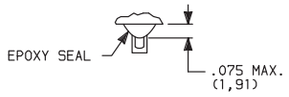

Compatible with “bottom-wash” PC board cleaning methods.

I EPOXY POTTED BASE

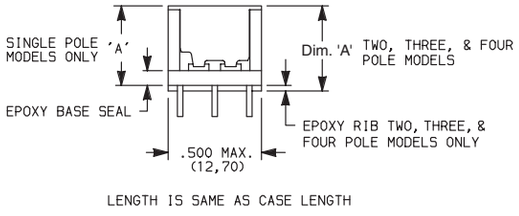

NO. POLES	DIM ‘A’
SP	.410 (10,41)
DP	.440 (11,18)
3P	.505 (12,83)
4P	.505 (12,83)

Available with C, W-W5, Z & Z3 terminations only.

AVAILABLE HARDWARE

Cap

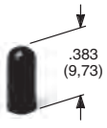

PART NO.

896801000 WHITE
896802000 BLACK
896803000 RED

Material: Polyethylene
Finish: Matte

Cap

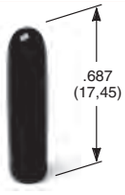

PART NO.

763701000 WHITE
763702000 BLACK
763703000 RED

Material: Vinyl
Finish: Matte

Cap



PART NO.

706201000 WHITE
706202000 BLACK
706203000 RED

Material: Vinyl
Finish: Matte

L41 Lever handle



PART NO.

481001000 WHITE
481002263 BLACK
481003000 RED

Material: Nylon
Finish: Matte

L42 Lever handle

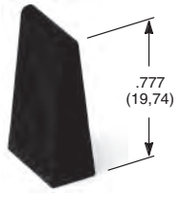

PART NO.

481101000 WHITE
481102263 BLACK
481103000 RED

Material: Nylon
Finish: Matte

Fits Z3 Termination female connector



PART NO.

530100000

Available in loose pieces.

NOTE: Additional nuts, locking rings and lockwashers available separately, see Section N.

Other colors available, consult Customer Service Center.

759D02000 Sealing Boot



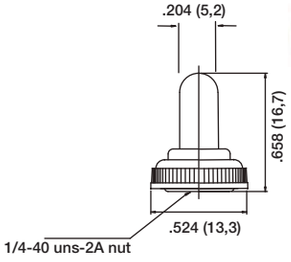

NOTE: For use with S actuator style when combined with D, H, H3, Y, and Y4 bushings

703D02000 Sealing Boot



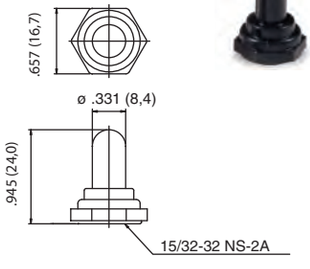

NOTE: For use with T and TP style actuators. **Cannot be used for Switch Functions: 7103, 7203, 7303, 7403, 7107, 7207, 7307, and 7407.**

704D02000 Sealing Boot



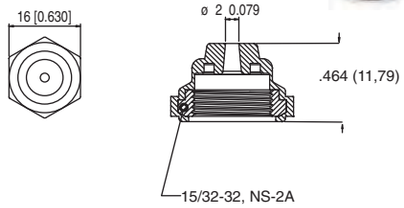

NOTE: For use with T, TP and T2P style actuators. **Cannot be used for Switch Functions: 7103, 7203, 7303, 7403, 7107, 7207, 7307, and 7407.**

Third Angle Projection

Dimensions are shown: Inches (mm)
Specifications and dimensions subject to change