OJ5022

Diffuse reflection sensor

OJB-FPKG/SO/AS

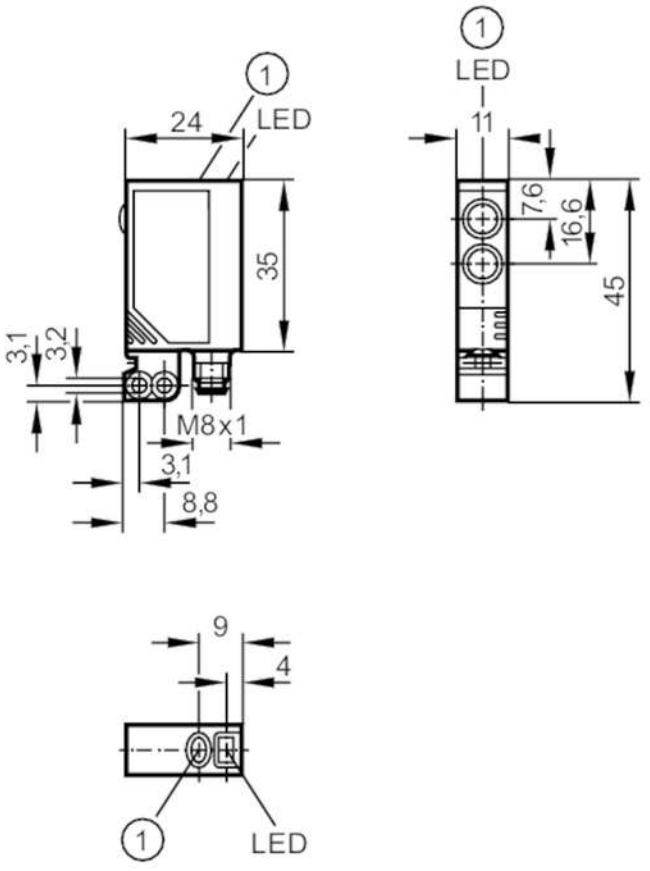

1 pushbutton

Product characteristics		
Type of light		red light
Housing		rectangular
Dimensions	[mm]	35 x 11 x 24
Application		
Function principle		Diffuse reflection sensor
Electrical data		
Operating voltage	[V]	10...30 DC
Current consumption	[mA]	< 22
Protection class		III
Reverse polarity protection		yes
Type of light		red light
Wave length	[nm]	660

OJ5022

Diffuse reflection sensor

OJB-FPKG/SO/AS

Outputs			
Electrical design		PNP	
Output function		light-on/dark-on mode; (programmable)	
Max. voltage drop switching output DC	[V]	2.5	
Permanent current rating of switching output DC	[mA]	200	
Switching frequency DC	[Hz]	2000	
Short-circuit protection		yes	
Type of short-circuit protection		yes (non-latching)	
Overload protection		yes	
Monitoring range			
Range	[mm]	1...600; (white paper 200 x 200 mm 90 % remission)	
Range adjustable		yes	
Max. light spot diameter	[mm]	60	
Light spot dimensions refer to		at maximum range	
Operating conditions			
Ambient temperature	[°C]	-25...60	
Protection		IP 67	
Tests / approvals			
EMC		EN 60947-5-2	
MTTF	[years]	854	
Mechanical data			
Weight	[g]	39.8	
Housing		rectangular	
Dimensions	[mm]	35 x 11 x 24	
Material		housing: ABS; fixture: diecast zinc; LED window: SEPS; pushbutton: SEPS	
Lens material		glass	
Lens alignment		Side sensing	
Displays / operating elements			
Display		Switching status	1 x LED, yellow
		Power	1 x LED, green
		Function	1 x LED, red
Electronic lock		yes	
Accessories			
Accessories (supplied)		Basic clip: 1 x, E20964	
		screws: 2 x x M3 x 16	
		spring washers: 2 x	
		Nuts: 2 x	
Remarks			
Remarks		cULus - Class 2 source required	
Pack quantity		1 pcs.	
Electrical connection			
Connector: 1 x M8			

OJ5022

Diffuse reflection sensor

OJB-FPKG/SO/AS



Connection

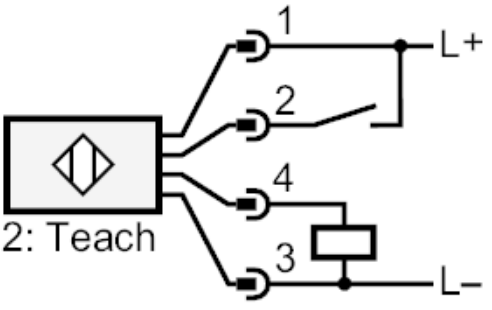

2	Teach

OJ5022

Diffuse reflection sensor

OJB-FPKG/SO/AS

Diagrams and graphs

excess gain graph

