# E30528

## Welding adapter for process sensors

WELDING ADAPT D85 G1 V4A 3A

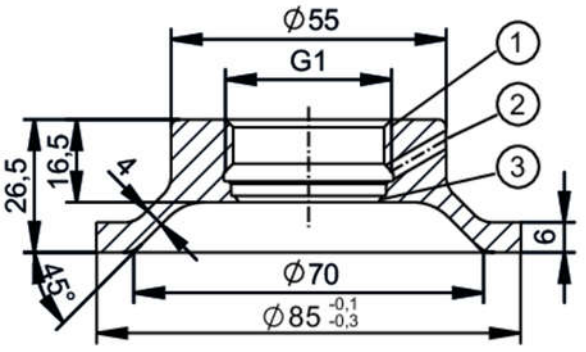


1 G1 Internal thread Aseptoflex Vario
2 Leakage port
3 sealing area

EC 1935/2004 EHEDG Certified FDA

| | | |
|---|---|---|
| **Application** | | |
| Design | | with leakage port |
| Installation | | for thick wall thicknesses and for unfavourable welding conditions; for tank head and wall |
| Pressure rating | [bar] | 16 |
| Note on pressure rating | | for the connection sensor - adapter |
| **Tests / approvals** | | |
| Pressure Equipment Directive | | A possible classification to PED depends on the application and has to be carried out by the user / operator. |
| Pressure Equipment Directive EAC | | The adapter is intended for use in devices, machines and installations that do not fall under the categories of the technical rule TR CU 032/2013. |
| Safety instructions | | The compatibility between medium and product material has to be checked in all applications. |
| **Mechanical data** | | |
| Weight | [g] | 426.06 |
| Materials (wetted parts) | | stainless steel (1.4435 / 316L) ; surface characteristics : Ra<0,4 / R |
| Sensor connection | | G 1 Aseptoflex Vario |
| Process connection | | welding adapter Ø 85 mm |
| Sealing | | Gasket |
| **Accessories** | | |
| Items supplied | | O-ring: 1 x 24 x 2, EPDM, E30054 |
| Accessories (optional) | | O-ring: 1 x 24 x 2, FKM, E30123 |
| **Remarks** | | |
| Pack quantity | | 1 pcs. |