SCHAEFFLER

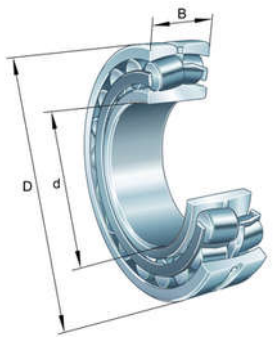

FAG

X-life

22220-E1-XL-C3

Spherical roller bearing

Schaeffler ID:
0167042150030

Spherical roller bearings 222..-E1, main dimensions to DIN 635-2

Technical information

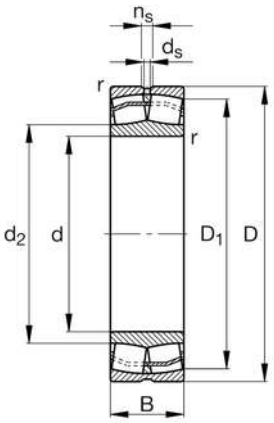

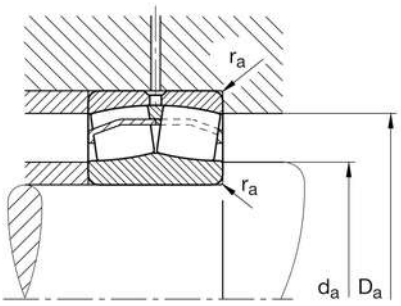

Main Dimensions & Performance Data

d	100 mm	Bore diameter
D	180 mm	Outside diameter
B	46 mm	Width
C_r	430,000 N	Basic dynamic load rating, radial
C_{0r}	475,000 N	Basic static load rating, radial
C_{ur}	53,000 N	Fatigue load limit, radial
n_G	4,550 1/min	Limiting speed
$n_{\vartheta r}$	3,150 1/min	Reference speed
	4.962 kg	Weight

Mounting dimensions

$d_{a\ min}$	112 mm	Minimum diameter shaft shoulder
$D_{a\ max}$	168 mm	Maximum diameter of housing shoulder
$r_{a\ max}$	2.1 mm	Maximum recess radius

Dimensions

r_{min}	2.1 mm	Minimum chamfer dimension
D_1	161.4 mm	Bore diameter outer ring
d_2	119 mm	Raceway diameter of the inner ring
d_s	4.8 mm	Diameter lubrication hole
n_s	9.5 mm	Width of lubricating groove

Temperature range

T_{min}	-30 °C	Operating temperature min.
T_{max}	200 °C	Operating temperature max.

The datasheet is only an overview of dimensions and basic load ratings of the selected product. Please always observe all further information and guidelines for this product. For further information you can use the contact form on our website.

Calculation factors		
e	0.24	Limiting value of Fa/Fr for the applicability of diff. Values of factors X and Y
Y_1	2.84	Dynamic axial load factor
Y_2	4.23	Dynamic axial load factor
Y_0	2.78	Static axial load factor

The datasheet is only an overview of dimensions and basic load ratings of the selected product. Please always observe all further information and guidelines for this product. For further information you can use the contact form on our website.