Limiter
Very Fast-Acting

ANN

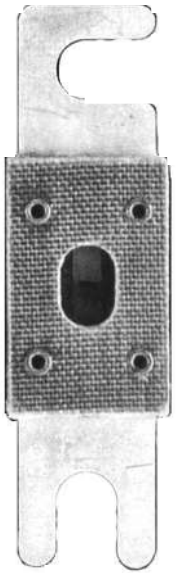

Dimensional Data

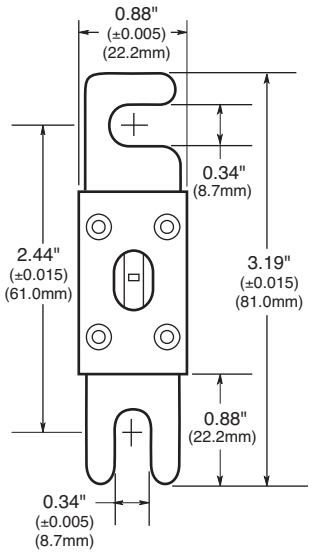

Time-Current Characteristic Curves–Average Melt

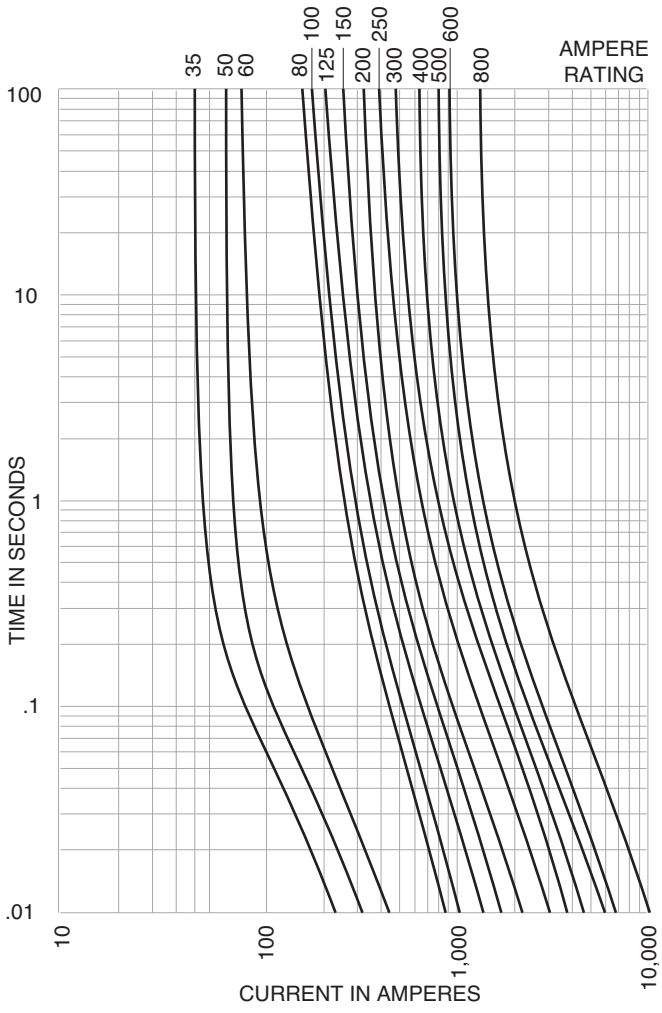

Catalog Symbol: ANN
Very Fast-Acting
Ampere Rating: 10 to 800A
Voltage Rating: 125Vac (or less)
80Vdc (or less)
Interrupting Rating: 2,500A ac,
2,700A dc
Agency Information: UL Recognized, 35-400A, 500A dc only, Guide JFHR2, File E56412

Electrical Ratings (Catalog Symbol and Amperes)

125Vac, IR 2500A @ 125V			
ANN-10	ANN-90	ANN-225	ANN-400
ANN-35	ANN-100	ANN-250	ANN-500
ANN-40	ANN-125	ANN-275	ANN-600
ANN-50	ANN-150	ANN-300	ANN-700
ANN-60	ANN-175	ANN-325	ANN-800
ANN-80	ANN-200	ANN-350	—

General Information:

- Very fast-acting (high speed of responses to short-circuit currents).
- An open link element is visible through a mica window.
- Stud mounts in Buss fuseblock 4164.
- CSA component acceptance, 35-400A, 500A dc only, Class 1422-30, file 53787.

Fuse Block No. 4164



The only controlled copy of this Data Sheet is the electronic read-only version located on the Cooper Bussmann Network Drive. All other copies of this document are by definition uncontrolled. This bulletin is intended to clearly present comprehensive product data and provide technical information that will help the end user with design applications. Cooper Bussmann reserves the right, without notice, to change design or construction of any products and to discontinue or limit distribution of any products. Cooper Bussmann also reserves the right to change or update, without notice, any technical information contained in this bulletin. Once a product has been selected, it should be tested by the user in all possible applications.