Ferrule fuse-links 14x51 aM 500 to 690VAC

LOW VOLTAGE IEC FUSES

IEC CYLINDRICAL FUSE-LINKS



Mersen aM and gG fuse-links cover a wide range of physical sizes and ampere ratings for 400, 500, and 690VAC for protection in electrical distribution circuits and various industrial applications. Most ratings are available in size 8x31 and size 10x38 with an optional indicator, and in size 14x51 and 22x58 with an optional striker to activate an auxiliary contact. Size 10x38 is also available with striker. All cylindrical fuse-links have ceramic bodies and silver-plated contacts.

Cylindrical fuse-links “aM” are partial range fuses. They protect electrical devices in case of unacceptable high short-circuit against destruction due high current limiting and low thermal let-through values. They cut off currents more than 6.3xIn until the maximum breaking capacity (rated breaking capacity). Cylindrical fuse-links “aM” are mainly used for the protection of installation switch gear in otor circuit currents. For classification of the cylindrical fuse-links the nominal current of the fuse-link can be selected respective to the nominal current of the motor.

Our technology and process was designed to ensure highly reliable technical performance.

TECHNICAL DATA OVERVIEW

Voltage Range AC	500 ... 690 VAC
Ampere Range (A)	0.25 ... 50 A
Speed/Characteristic	aM
I.R. AC (IEC)	120 kA
Body Material	Ceramic
Body Style	cylindrical
Contact Materials	Silver plated copper
Product Size	14x51 mm

FEATURES & BENEFITS

- Reduced size
- Striker version available for remote indication of fuse operation
- Safest and most reliable protection system

APPLICATIONS

- aM type for protection of motors, transformers and other loads with in-rush currents.

STANDARDS

- IEC 60269-1 & -2
- Approved by Lloyd’s Register of Shipping and Bureau Veritas

©2025 Mersen. All rights reserved. Mersen reserves the right to change, adapt, limit or discontinue its products. Therefore the data provided herein are for information only and are not contractually binding. To ensure that Mersen provides the best solution to your needs, please contact and provide Mersen with all relevant technical specifications and conditions.

Ferrule fuse-links 14x51 aM 500 to 690VAC

PRODUCT RANGE



FR14AM69V12



FR14AM50V50

Size 14,3x51 aM 500/690VAC without indicator

Catalog number	Item number	Rated voltage AC (IEC)	Rated current I_n	Rated breaking capacity AC	Power dissipation at I_n	Weight
FR14AM69V0.25	B212590	690 V	0.25 A	120 kA	0.1 W	21 g
FR14AM69V0.5	L213105	690 V	0.5 A	120 kA	0.9 W	21 g
FR14AM69V1	E213605	690 V	1 A	120 kA	0.13 W	21 g
FR14AM69V2	H214114	690 V	2 A	120 kA	0.18 W	21 g
FR14AM69V4	K214622	690 V	4 A	120 kA	0.28 W	21 g
FR14AM69V6	S215135	690 V	6 A	120 kA	0.42 W	21 g
FR14AM69V8	T215642	690 V	8 A	120 kA	0.55 W	21 g
FR14AM69V10	Z216659	690 V	10 A	120 kA	0.65 W	21 g
FR14AM69V12	M217177	690 V	12 A	120 kA	0.75 W	21 g
FR14AM69V16	Q217686	690 V	16 A	120 kA	1.05 W	21 g
FR14AM69V20	P218720	690 V	20 A	120 kA	1.3 W	21 g
FR14AM69V25	E219769	690 V	25 A	120 kA	1.55 W	21 g
FR14AM69V32	G1011477	690 V	32 A	120 kA	2.05 W	21 g
FR14AM69V40	J1011479	690 V	40 A	120 kA	2.65 W	21 g
FR14AM50V32	M222214	500 V	32 A	120 kA	2.05 W	21 g
FR14AM50V40	Q200758	500 V	40 A	120 kA	2.65 W	21 g
FR14AM50V45	L211035	500 V	45 A	120 kA	2.85 W	21 g
FR14AM50V50	E211558	500 V	50 A	120 kA	2.95 W	21 g



FR14AM50V25P

Size 14,3x51 aM 500VAC with striker

Catalog number	Item number	Rated voltage AC (IEC)	Rated current I_n	Rated breaking capacity AC	Power dissipation at I_n	Weight
FR14AM50V1P	W215644	500 V	1 A	120 kA	0.13 W	21 g
FR14AM50V2P	B216661	500 V	2 A	120 kA	0.18 W	21 g
FR14AM50V4P	C218203	500 V	4 A	120 kA	0.28 W	21 g
FR14AM50V6P	E219240	500 V	6 A	120 kA	0.42 W	21 g
FR14AM50V8P	N222215	500 V	8 A	120 kA	0.55 W	21 g
FR14AM50V10P	S200760	500 V	10 A	120 kA	0.65 W	21 g
FR14AM50V12P	R201817	500 V	12 A	120 kA	0.75 W	21 g
FR14AM50V16P	G211560	500 V	16 A	120 kA	1.05 W	21 g
FR14AM50V20P	E212593	500 V	20 A	120 kA	1.3 W	21 g
FR14AM50V25P	H213608	500 V	25 A	120 kA	1.55 W	21 g
FR14AM50V32P	N214625	500 V	32 A	120 kA	2.05 W	21 g
FR14AM50V40P	X215645	500 V	40 A	120 kA	2.65 W	21 g
FR14AM50V45P	C216662	500 V	45 A	120 kA	2.85 W	21 g
FR14AM50V50P	D218204	500 V	50 A	120 kA	2.95 W	21 g

©2025 Mersen. All rights reserved. Mersen reserves the right to change, adapt, limit or discontinue its products. Therefore the data provided herein are for information only and are not contractually binding. To ensure that Mersen provides the best solution to your needs, please contact and provide Mersen with all relevant technical specifications and conditions.

TIME CURRENT CHARACTERISTIC CURVES

Size 14x51 690V aM

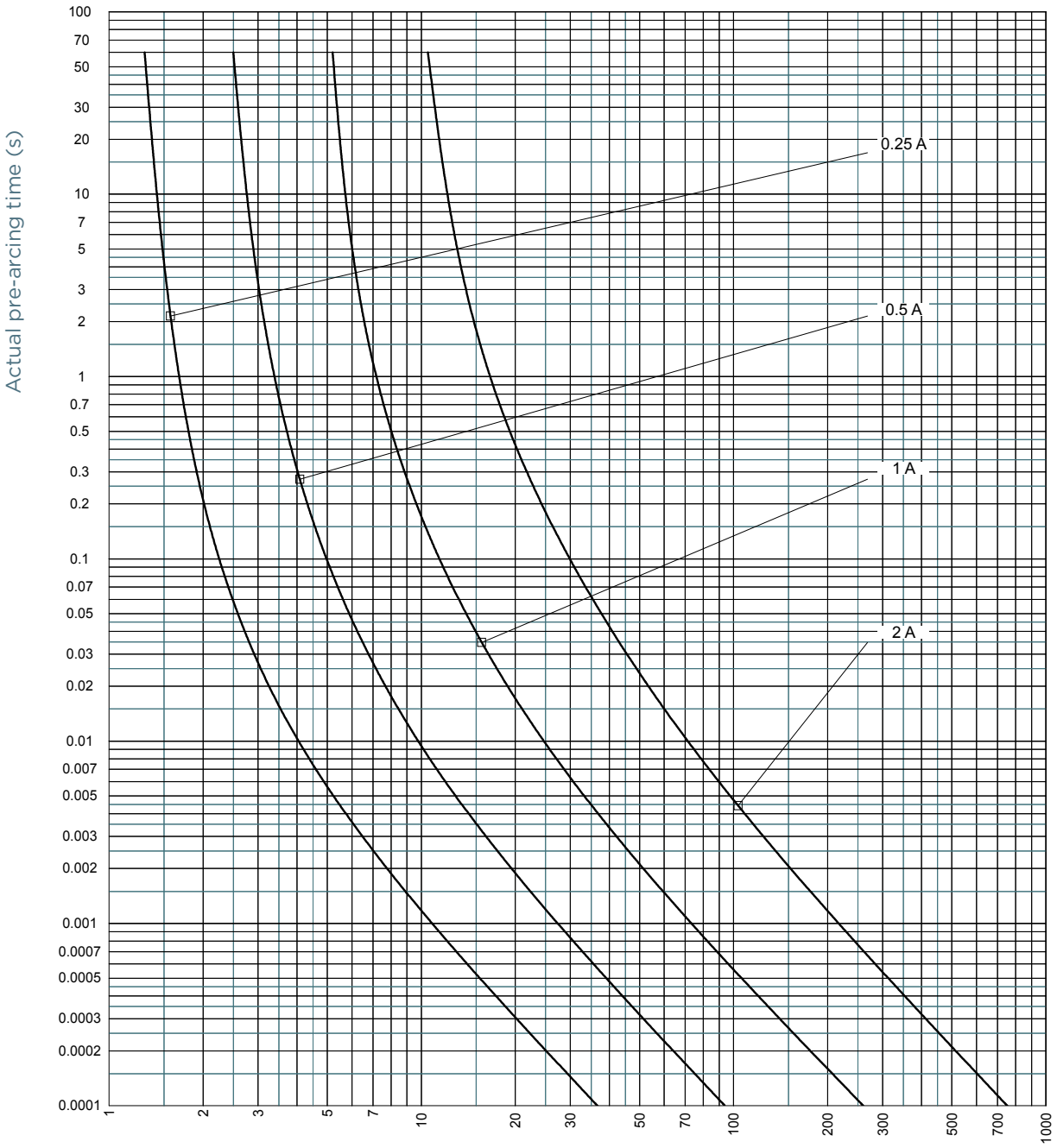

©2025 Mersen. All rights reserved. Mersen reserves the right to change, adapt, limit or discontinue its products. Therefore the data provided herein are for information only and are not contractually binding. To ensure that Mersen provides the best solution to your needs, please contact and provide Mersen with all relevant technical specifications and conditions.

Ferrule fuse-links 14x51 aM 500 to 690VAC

TIME CURRENT CHARACTERISTIC CURVES

Size 14x51 690V

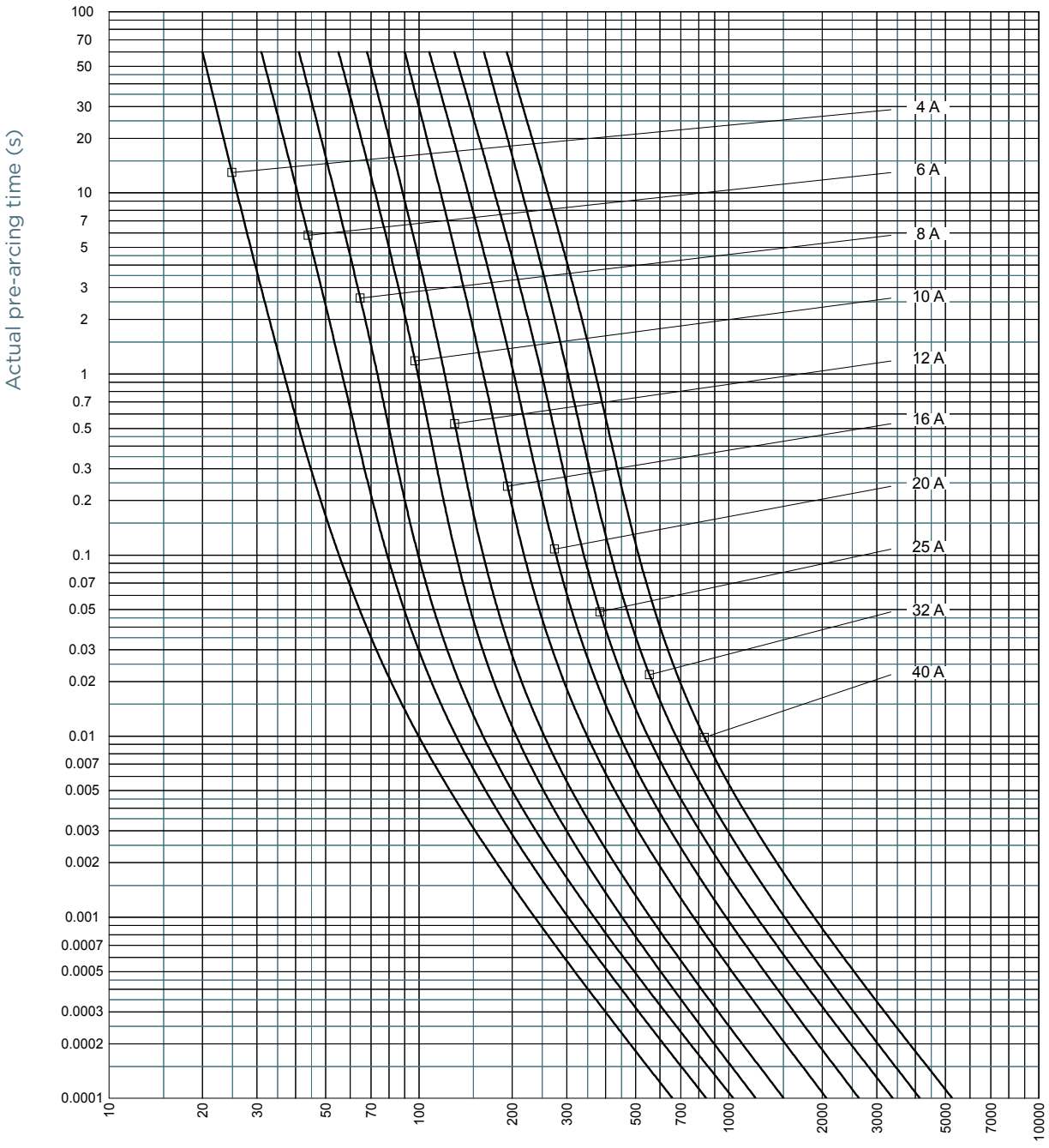

MERSEN.COM

©2025 Mersen. All rights reserved. Mersen reserves the right to change, adapt, limit or discontinue its products. Therefore the data provided herein are for information only and are not contractually binding. To ensure that Mersen provides the best solution to your needs, please contact and provide Mersen with all relevant technical specifications and conditions.

Expertise, our source of energy

TIME CURRENT CHARACTERISTIC CURVES

Size 14x51 500V aM

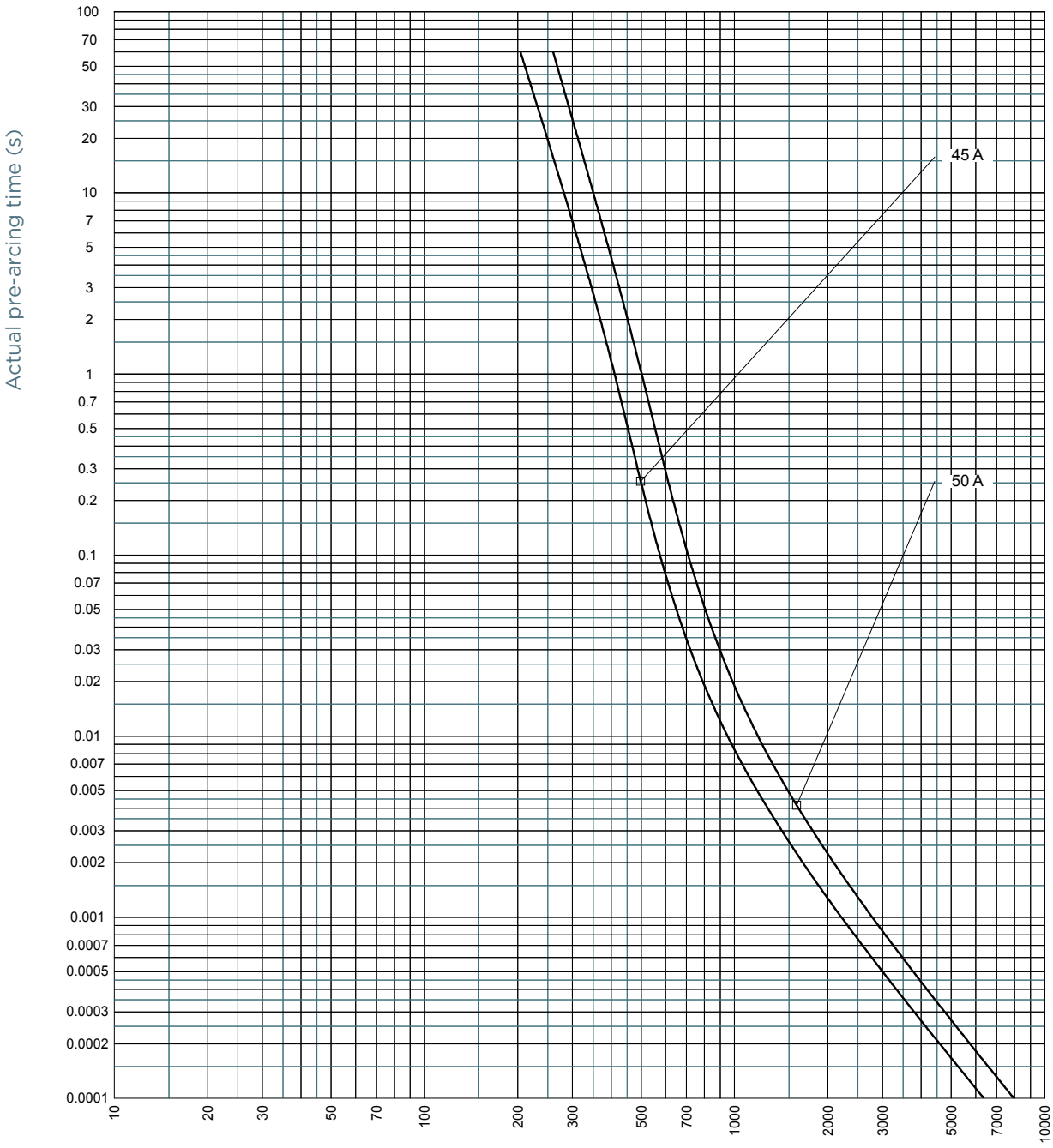

©2025 Mersen. All rights reserved. Mersen reserves the right to change, adapt, limit or discontinue its products. Therefore the data provided herein are for information only and are not contractually binding. To ensure that Mersen provides the best solution to your needs, please contact and provide Mersen with all relevant technical specifications and conditions.

CUT-OFF CURRENT CHARACTERISTIC

Size 14x51 690V aM

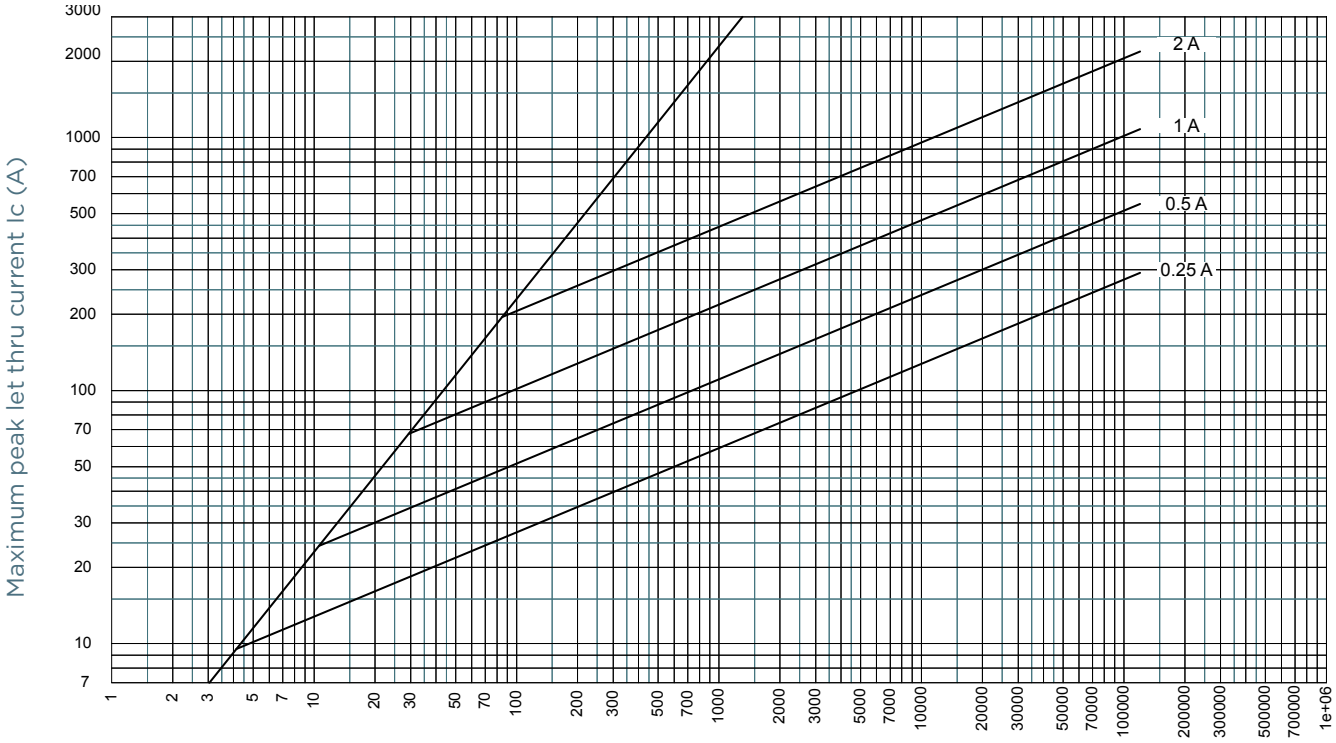

Size 14x51 690V

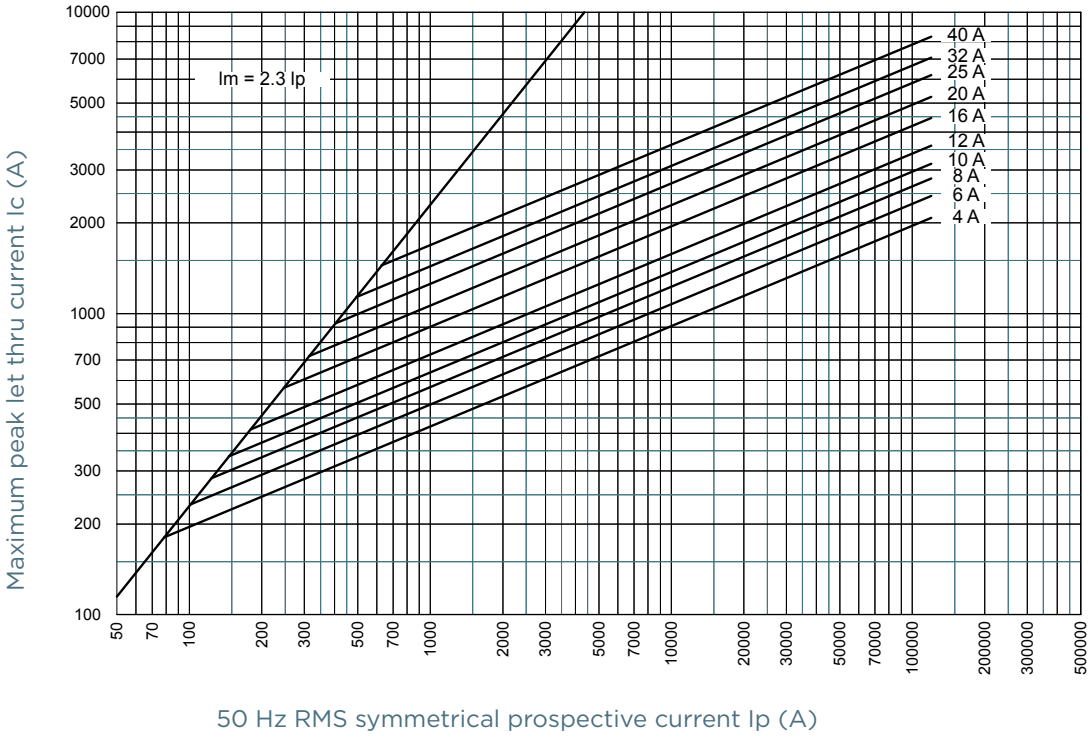

MERSEN.COM

©2025 Mersen. All rights reserved. Mersen reserves the right to change, adapt, limit or discontinue its products. Therefore the data provided herein are for information only and are not contractually binding. To ensure that Mersen provides the best solution to your needs, please contact and provide Mersen with all relevant technical specifications and conditions.

MERSEN Expertise, our source of energy

CUT-OFF CURRENT CHARACTERISTIC

Size 14x51 500V aM

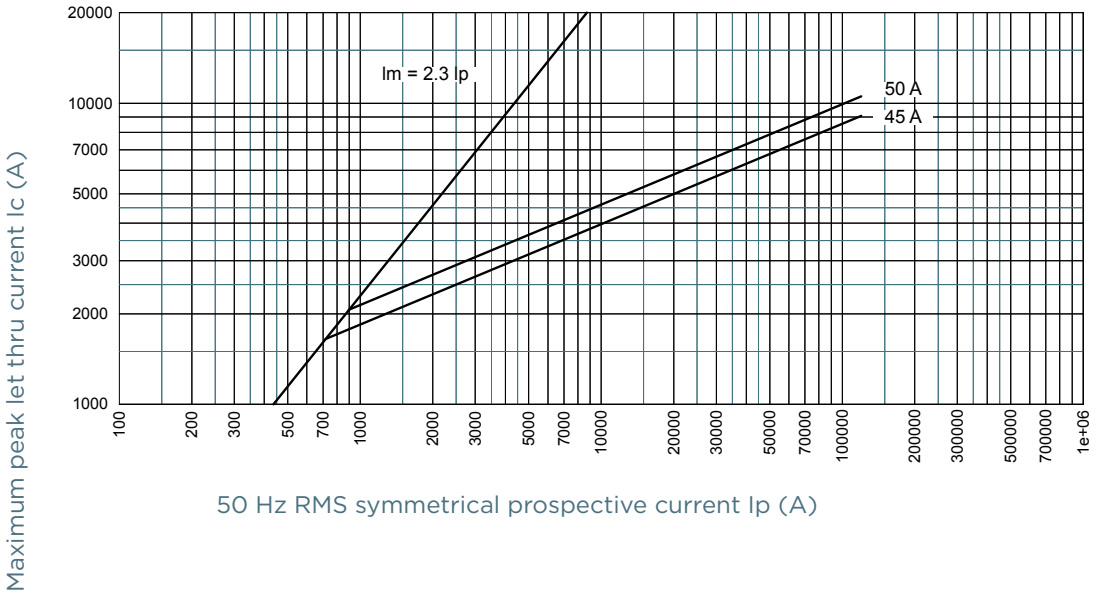

PRE-ARCING AND OPERATING I^2T CHARACTERISTICS

Size 14x51 690V aM

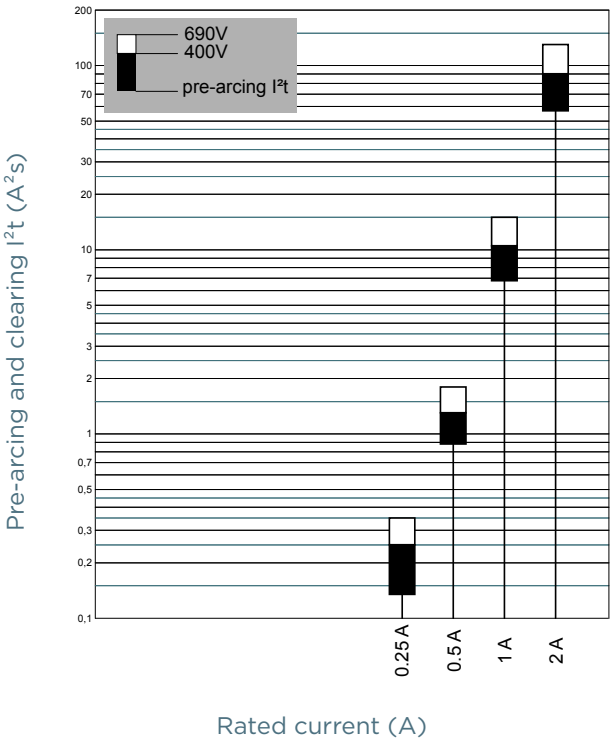

©2025 Mersen. All rights reserved. Mersen reserves the right to change, adapt, limit or discontinue its products. Therefore the data provided herein are for information only and are not contractually binding. To ensure that Mersen provides the best solution to your needs, please contact and provide Mersen with all relevant technical specifications and conditions.

PRE-ARCING AND OPERATING I^2T CHARACTERISTICS

Size 14x51 690V

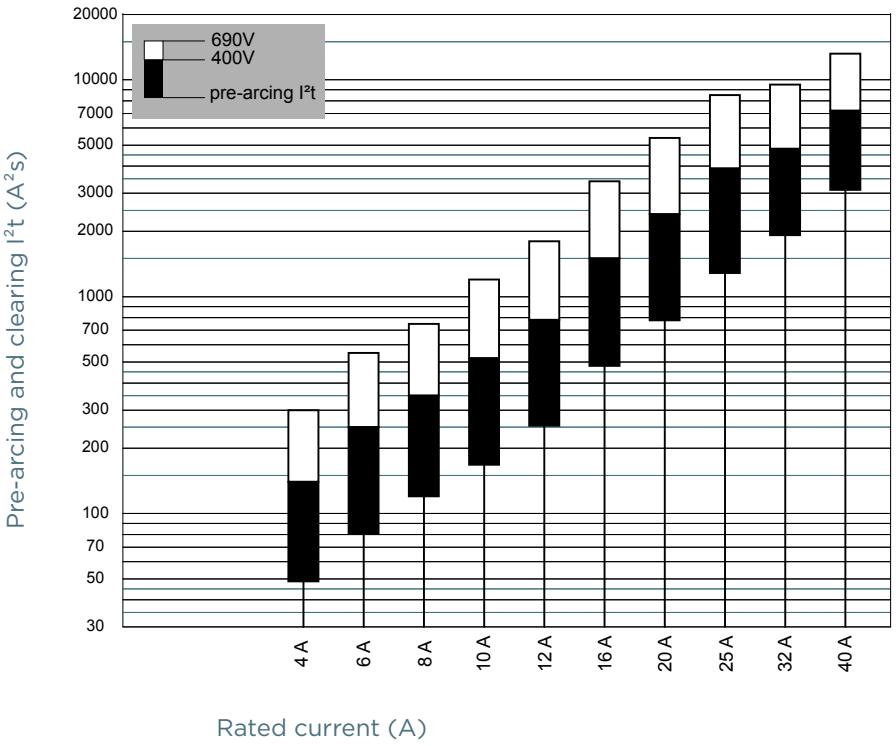

Size 14x51 500V aM

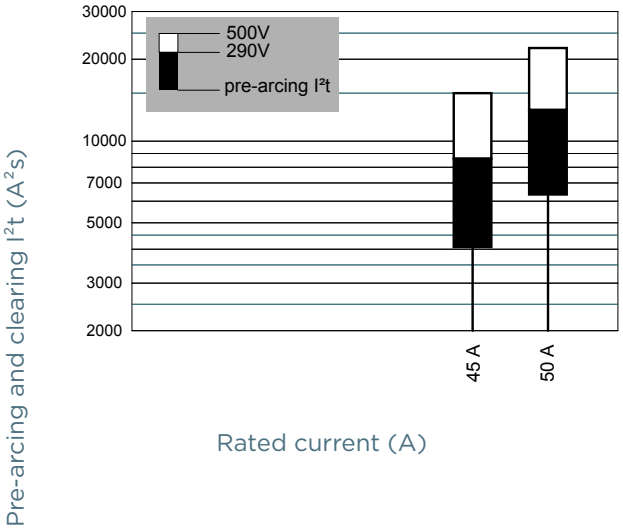

MERSEN.COM

©2025 Mersen. All rights reserved. Mersen reserves the right to change, adapt, limit or discontinue its products. Therefore the data provided herein are for information only and are not contractually binding. To ensure that Mersen provides the best solution to your needs, please contact and provide Mersen with all relevant technical specifications and conditions.

Expertise, our source of energy

DIMENSIONS

Size 14x51 aM without indicator (1001212)

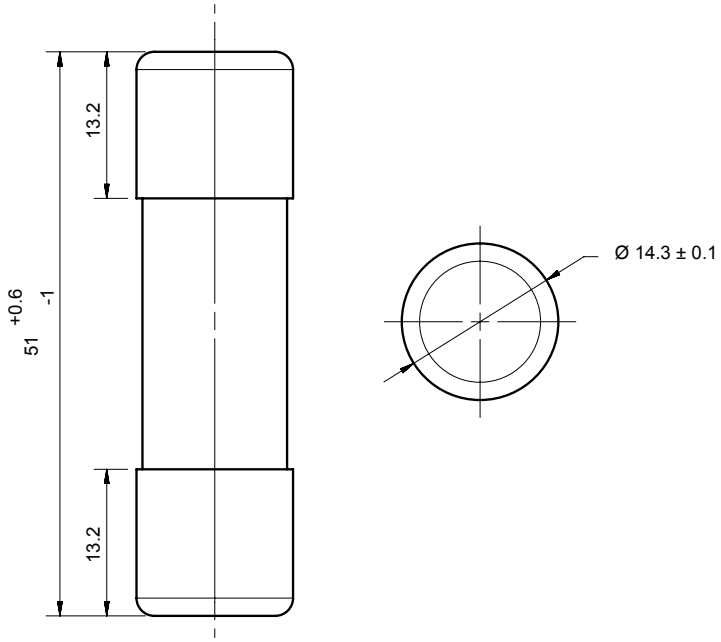

Dimensions in mm

Size 14x51 aM with striker (1001211)

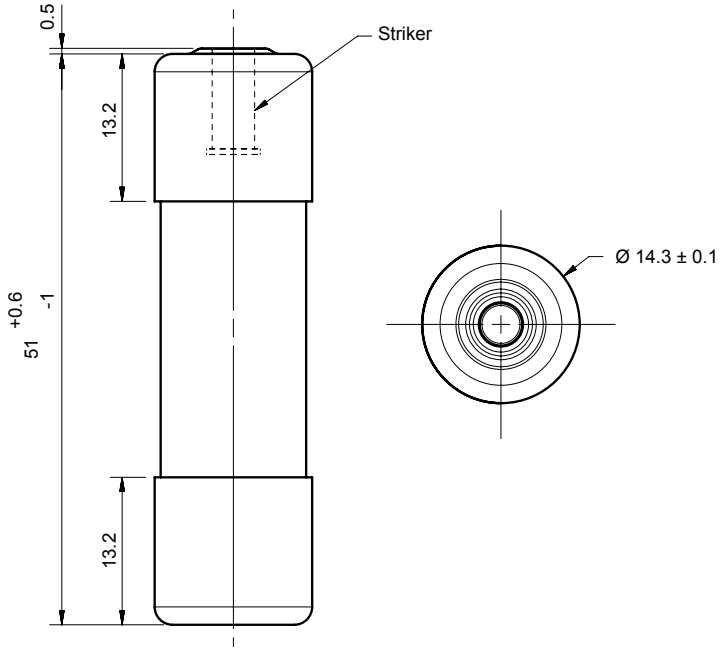

Dimensions in mm

MERSEN.COM

©2025 Mersen. All rights reserved. Mersen reserves the right to change, adapt, limit or discontinue its products. Therefore the data provided herein are for information only and are not contractually binding. To ensure that Mersen provides the best solution to your needs, please contact and provide Mersen with all relevant technical specifications and conditions.

Expertise, our source of energy