R3G250-RE07-07

EC centrifugal fan - RadiCal

backward-curved

ebm-papst Mulfingen GmbH & Co. KG
Bachmühle 2 · D-74673 Mulfingen
Phone +49 7938 81-0
Fax +49 7938 81-110
info1@de.ebmpapst.com
www.ebmpapst.com

Limited partnership · Headquarters Mulfingen
Amtsgericht (court of registration) Stuttgart · HRA 590344

General partner Elektrobau Mulfingen GmbH · Headquarters Mulfingen
Amtsgericht (court of registration) Stuttgart · HRB 590142

Nominal data

Type	**R3G250-RE07-07**
Motor	**M3G055-DF**

Phase		1~
Nominal voltage	VAC	230
Nominal voltage range	VAC	200 .. 240
Frequency	Hz	50/60
Method of obtaining data		ml
Speed (rpm)	min^{-1}	2510
Power consumption	W	170
Current draw	A	1.4
Min. ambient temperature	°C	-25
Max. ambient temperature	°C	60

ml = Max. load · me = Max. efficiency · fa = Free air · cs = Customer specification · ce = Customer equipment
Subject to change

Data according to Commission Regulation (EU) 327/2011

		Actual	Req. 2015
01 Overall efficiency η_{es}	%	57.8	43.1
02 Measurement category		A	
03 Efficiency category		Static	
04 Efficiency grade N		76.7	62
05 Variable speed drive		Yes	

09 Power consumption P_{ed}	kW	0.16
09 Air flow q_v	m^3/h	800
09 Pressure increase p_{fs}	Pa	380
10 Speed (rpm) n	min^{-1}	2535
11 Specific ratio*		1.00

Data obtained at optimum efficiency level.
The ErP data is determined using a motor-impeller combination in a standardized measurement setup.

* Specific ratio = 1 + p_{fs} / 100 000 Pa

LU-153273

EC centrifugal fan - RadiCal

backward-curved

Technical description

Weight	1.9 kg
Fan size	250 mm
Rotor surface	Thick-film passivated
Electronics housing material	Die-cast aluminum
Impeller material	PA plastic
Number of blades	7
Direction of rotation	Clockwise, viewed toward rotor
Degree of protection	IP54
Insulation class	"B"
Moisture (F) / Environmental (H) protection class	H1
Max. permitted ambient temp. for motor (transport/storage)	+ 80 °C
Min. permitted ambient temp. for motor (transport/storage)	- 40 °C
Installation position	Any
Condensation drainage holes	None, open rotor
Mode	S1
Motor bearing	Ball bearing
Technical features	- Output 10 VDC, max. 1.1 mA - Tach output - Motor current limitation - Soft start - Control input 0-10 VDC / PWM - Thermal overload protection for electronics/motor - Line undervoltage detection
EMC immunity to interference	According to EN 61000-6-2 (industrial environment)
EMC interference emission	According to EN 61000-6-4 (industrial environment)
Touch current according to IEC 60990 (measuring circuit Fig. 4, TN system)	<= 3.5 mA
Motor protection	Electronic motor protection
With cable	Variable
Protection class	I (with customer connection of protective earth)
Conformity with standards	EN 60335-1; CE
Approval	CCC; C22.2 No.77 + CAN/CSA-E60730-1; UL 1004-7 + 60730; EAC

ebm-papst Mulfingen GmbH & Co. KG · Bachmühle 2 · D-74673 Mulfingen · Phone +49 (0) 7938 81-0 · Fax +49 (0) 7938 81-110 · info1@de.ebmpapst.com · www.ebmpapst.com

EC centrifugal fan - RadiCal

backward-curved

Product drawing

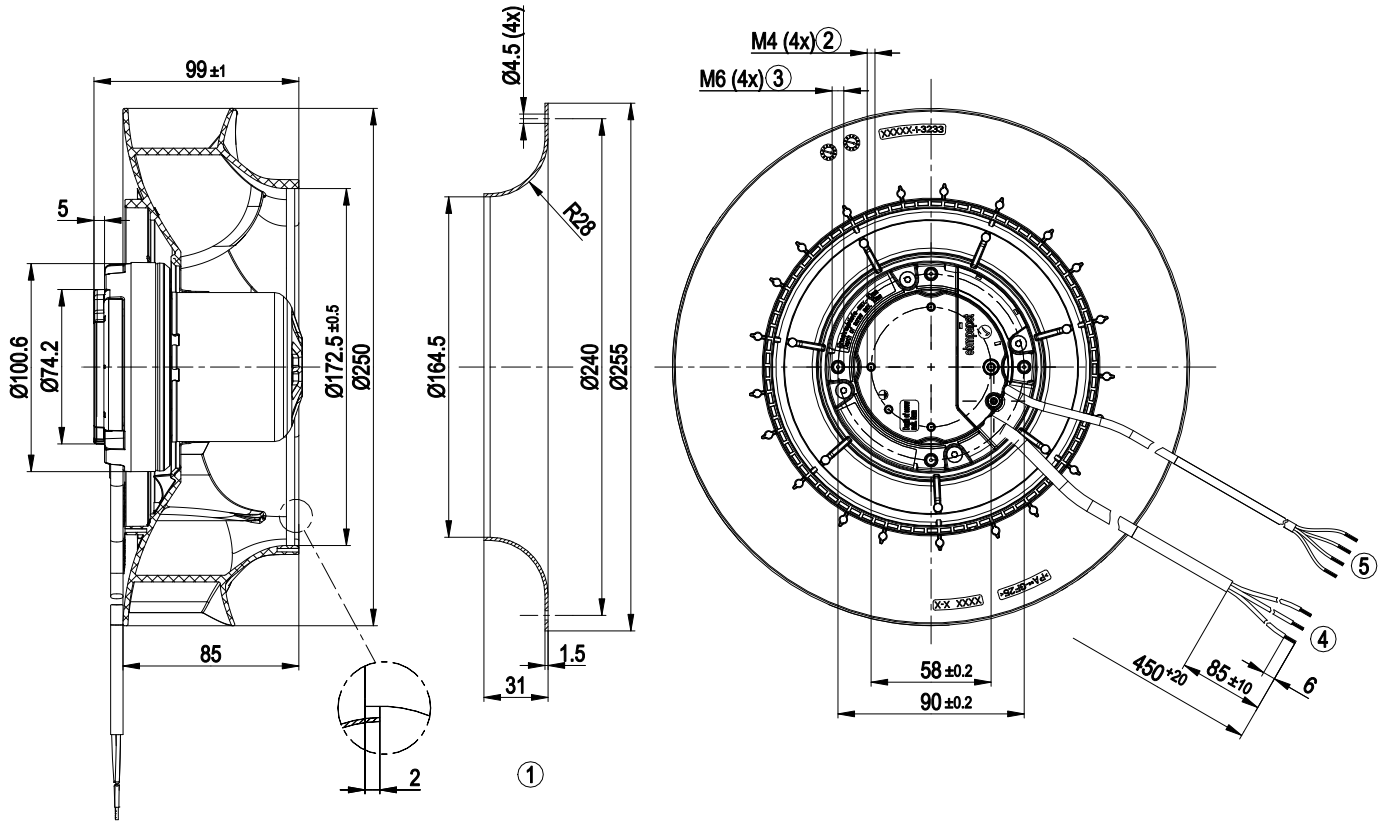

1	Accessory part: inlet ring 96359-2-4013, not included in scope of delivery
2	Max. clearance for screw 5 mm
3	Max. clearance for screw 10 mm
4	Cable PVC 3x AWG20, 3x crimped splices
5	Cable PVC AWG22, 4x crimped splices

ebm-papst Mulfingen GmbH & Co. KG · Bachmühle 2 · D-74673 Mulfingen · Phone +49 (0) 7938 81-0 · Fax +49 (0) 7938 81-110 · info1@de.ebmpapst.com · www.ebmpapst.com

EC centrifugal fan - RadiCal

backward-curved

Connection diagram

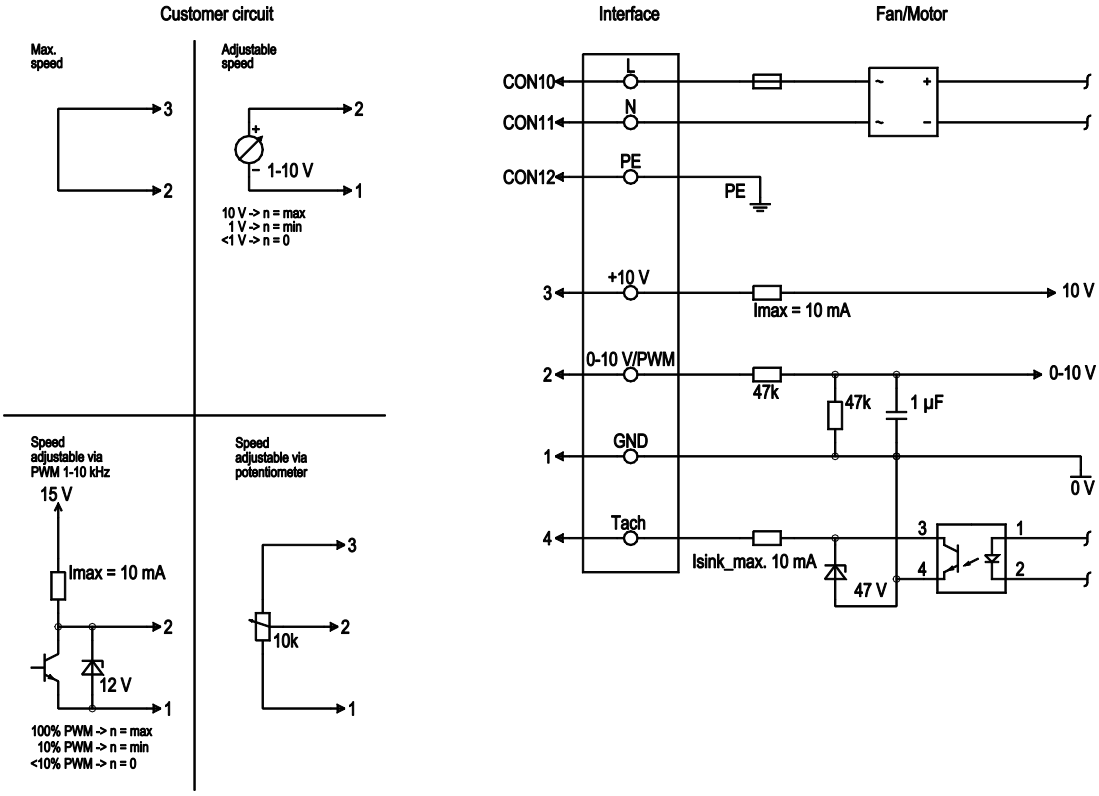

No.	Conn.	Designation	Color	Function/assignment
	CON10	L	black	Supply connection, power supply, phase, see nameplate for voltage range
	CON11	N	blue	Supply connection, power supply, neutral conductor, see nameplate for voltage range
	CON12	PE	green/yellow	Ground connection
	2	0- 10V PWM	yellow	0-10 V / PWM control input, Ri=100 kΩ, SELV
	4	Tach	white	Tach output, open collector, 1 pulse per revolution, Isink max = 10 mA, SELV
	3	+10 V	red	Fixed voltage output 10 VDC +/-3 %, Imax. 10 mA, short-circuit-proof, power supply for ext. devices (e.g. pot), SELV
	1	GND	blue	Reference ground for control interface, SELV

ebm-papst Mulfingen GmbH & Co. KG · Bachmühle 2 · D-74673 Mulfingen · Phone +49 (0) 7938 81-0 · Fax +49 (0) 7938 81-110 · info1@de.ebmpapst.com · www.ebmpapst.com

EC centrifugal fan - RadiCal

backward-curved

Curves: Air performance 50 Hz

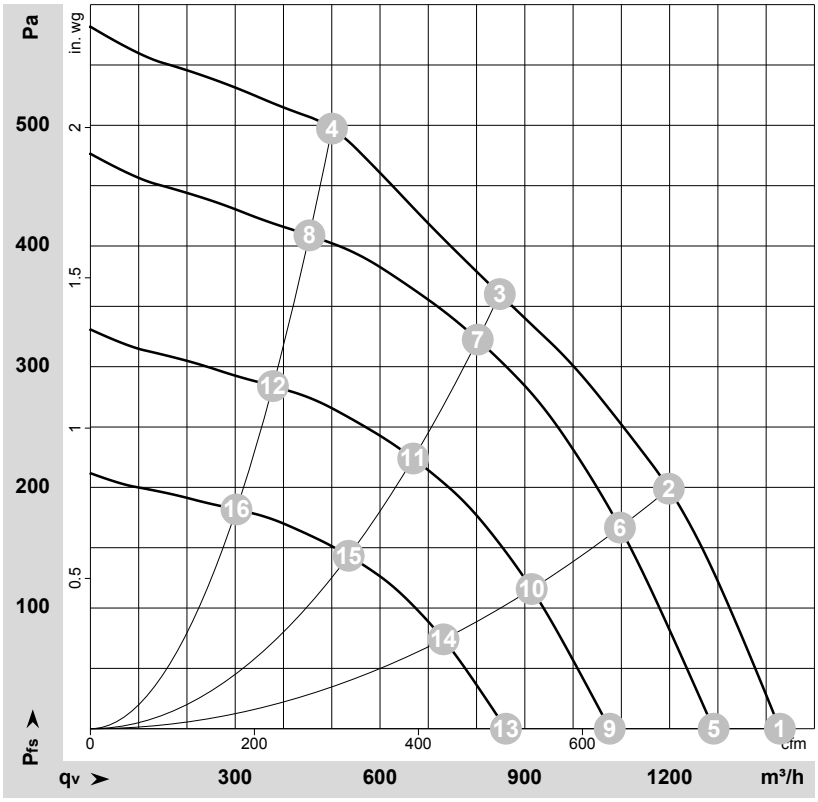

ρ = 1.15 kg/m³ ± 2 %

Measurement: LU-154717-1

Air performance measured according to ISO 5801 installation category A. For detailed information on the measurement setup, contact ebm-papst. Intake sound level: Sound power level according to ISO 13347 / sound pressure level measured at 1 m distance from fan axis. The values given are valid under the specified measuring conditions and may vary due to conditions of installation. For deviations from the standard configuration, the parameters have to be checked on the installed unit.

Measured values

	U	f	n	P_{ed}	I	LpA_{in}	LwA_{in}	q_V	p_{fs}	q_V	p_{fs}
	V	Hz	min^{-1}	W	A	dB(A)	dB(A)	m^3/h	Pa	cfm	in. wg
1	230	50	2650	143	1.18	70	77	1430	0	840	0.00
2	230	50	2625	170	1.40	64	71	1200	200	705	0.80
3	230	50	2510	170	1.40	59	67	850	360	500	1.45
4	230	50	2650	168	1.39	65	72	500	500	295	2.01
5	230	50	2400	105	0.87	67	75	1290	0	760	0.00
6	230	50	2400	130	1.08	61	69	1095	167	645	0.67
7	230	50	2400	143	1.19	58	66	800	322	470	1.29
8	230	50	2400	124	1.03	63	70	455	409	265	1.64
9	230	50	2000	61	0.51	63	70	1075	0	635	0.00
10	230	50	2000	75	0.62	57	64	915	116	540	0.47
11	230	50	2000	83	0.69	53	61	670	224	395	0.90
12	230	50	2000	72	0.60	58	65	380	284	220	1.14
13	230	50	1600	31	0.26	57	65	860	0	505	0.00
14	230	50	1600	39	0.32	51	59	730	74	430	0.30
15	230	50	1600	43	0.35	48	55	535	143	315	0.57
16	230	50	1600	37	0.31	52	60	305	182	180	0.73

U = Power supply · f = Frequency · n = Speed (rpm) · P_{ed} = Power consumption · I = Current draw · LpA_{in} = Sound pressure level intake side · LwA_{in} = Sound power level intake side
q_V = Air flow · p_{fs} = Pressure increase

ebm-papst Mulfingen GmbH & Co. KG · Bachmühle 2 · D-74673 Mulfingen · Phone +49 (0) 7938 81-0 · Fax +49 (0) 7938 81-110 · info1@de.ebmpapst.com · www.ebmpapst.com