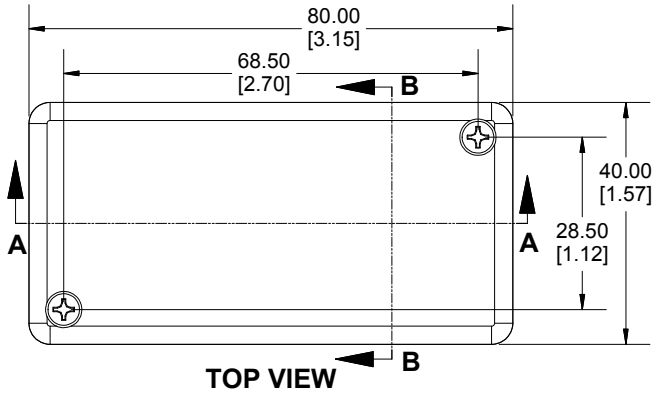

TOP VIEW

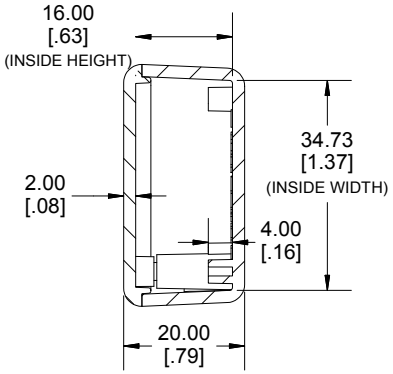

END VIEW
SECTION B-B

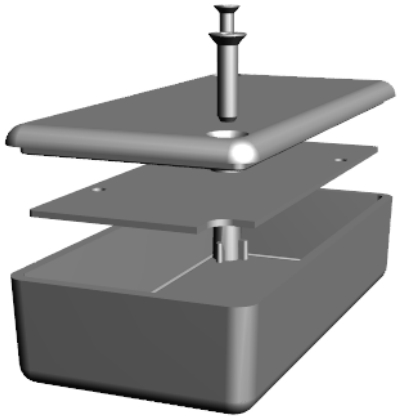

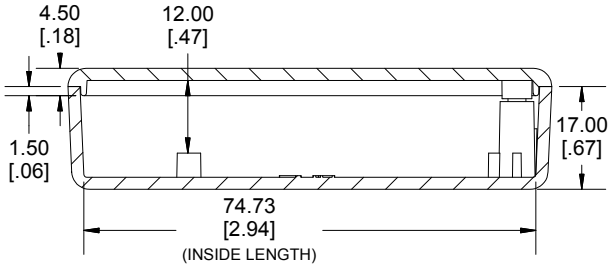

SIDE VIEW
SECTION A-A

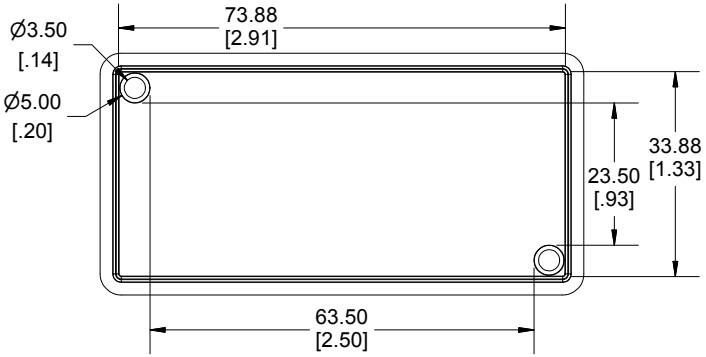

INSIDE LID

Enclosures can be Factory Modified (Milling, Drilling, Printing etc.)
Contact Factory mjm@hammondmfg.com for quotes
Solid models of this enclosure available in STEP or IGES.
(Part number and text placement/orientation on our products are subject to change, we do not recommend using them as a locating reference for modification purposes)

NOTE
Purchased assembly includes box, lid, 2 cover screws.
Enclosure molded from general purpose ABS Plastic.
Other materials / colours available consult factory.
Recommended Torque : (35-43) Ozf.in / (25-30) cN.m

PART NUMBERS	
1551K Enclosure	
Black Enclosure - Ral 9011 - UL94 - HB	1551KBK
Gray Enclosure - RAL 7035 - UL94 - HB	1551KGY
Tranlucent Blue - UL94 - HB	1551KTBU
ACCESSORIES	
Black Cover Screws #4 X 1/2" Self-tapping	1591TS100BK (Pkg 100)
Plated Cover Screws #4 X 1/2" Self-tapping	1591TS100 (Pkg 100)
P.C. Board Screws [#2 x 3/16" self-tapping (4.8mm)]	1551ATS100 (Pkg 100)

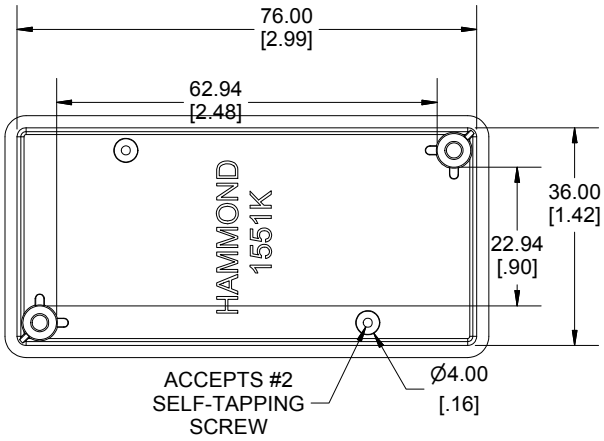

INSIDE BOX

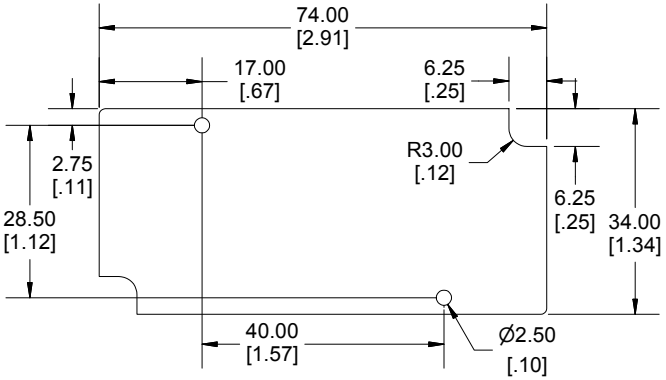

MAXIMUM
P.C. BOARD SIZE

Dimensions:
mm
[inches]

HAMMOND MANUFACTURING®

1551K

www.hammondmfg.com