TI01603D/06/EN/02.22-00
71574655
2022-08-01

Technical Information
Proline Promag D 10

Electromagnetic flowmeter



Highly cost-effective wafer flowmeter with easy-to-use operation concept

Application

- The bidirectional measuring principle is virtually independent of pressure, density, temperature and viscosity
- For basic water applications; optimized for limited space and plastic pipe installations

Device properties

- Short installation length and low weight
- Integrated ground disks made of stainless steel
- International drinking water approvals
- System integration with HART, Modbus RS485
- Flexible operation with app and optional display

Your benefits

- Easy, fast centering of the sensor – innovative housing construction
- Energy-saving flow measurement – no pressure loss due to cross section constriction
- Maintenance-free – no moving parts
- Optimum usability – operation with mobile devices and SmartBlue app or display with touch screen
- Simple, time-saving commissioning – guided parameterization in advance and in the field
- Integrated verification – Heartbeat Technology

Endress+Hauser
People for Process Automation

Table of contents

About this document 4
Symbols 4
Associated documentation 4
Ordering information 4
Registered trademarks 6

Function and system design 8
Measuring principle 8
Product design 8
IT security 9
Device-specific IT security 9

Input 12
Measured variable 12
Operable flow range 12
Measuring range 12

Output 14
Output versions 14
Output signal 14
Signal on alarm 17
Low flow cut off 17
Galvanic isolation 17
Protocol-specific data 17

Power supply 20
Terminal assignment 20
Supply voltage 20
Power consumption 20
Current consumption 20
Power supply failure 21
Electrical connection 21
Potential equalization 25
Terminals 26
Cable entries 26
Overvoltage protection 26

Cable specification 28
Requirements for connecting cable 28
Ground cable requirements 28
Connecting cable requirements 28

Performance characteristics 32
Reference operating conditions 32
Maximum measured error 32
Repeatability 32
Influence of ambient temperature 32

Installation 34
Installation conditions 34

Environment 40
Ambient temperature range 40
Storage temperature 40
Relative humidity 40
Operating height 40
Degree of protection 40
Vibration-resistance and shock-resistance 40
Electromagnetic compatibility (EMC) 41

Process 44
Medium temperature range 44
Conductivity 44
Flow limit 44
Pressure-temperature ratings 45
Pressure tightness 45
Pressure loss 45

Mechanical construction 48
Weight 48
Measuring tube specification 49
Materials 50
Mounting bolts 51
Fitted electrodes 51
Process connections 52

Dimensions in SI units 54
Compact version 54
Remote version 56
Flange connections 59
Couplings 62
Accessories 63

Dimensions in US units 66
Compact version 66
Remote version 68
Flange connections 71
Couplings 72
Accessories 73

Local display 76
Operating concept 76
Operating options 76
Operating tools 77

Certificates and approvals 80
Non-Ex approval 80
Pressure Equipment Directive 80
Drinking water approval 80
HART certification 80
Radio approval 80
Other standards and guidelines 80

Application packages 84
Use 84
Heartbeat Verification + Monitoring 84

Accessories 86
Device-specific accessories 86
Communication-specific accessories 87
Service-specific accessory 87
System components 88

About this document

Symbols 4
Associated documentation 4
Ordering information 4
Registered trademarks 6

Symbols

Electronics

⎓ Direct current

~ Alternating current

⎓~ Direct current and alternating current

⏚ Terminal connection for potential equalization

Types of information

✓✓ Preferred procedures, processes or actions

✓ Permitted procedures, processes or actions

✗ Forbidden procedures, processes or actions

ℹ Additional information

Reference to documentation

Reference to page

Reference to graphic

Explosion protection

Ex Hazardous area

Non-hazardous area

Associated documentation

Technical Information	Overview of the device with the most important technical data.
Operating Instructions	All the information that is required in the various phases of the life cycle of the device: from product identification, incoming acceptance and storage, to mounting, connection, operation and commissioning through to troubleshooting, maintenance and disposal as well as the technical data and dimensions.
Sensor Brief Operating Instructions	Incoming acceptance, transport, storage and mounting of the device.
Transmitter Brief Operating Instructions	Electrical connection and commissioning of the device.
Description of Parameters	Detailed explanation of the menus and parameters.
Safety Instructions	Documents for the use of the device in hazardous areas.
Special Documentation	Documents with more detailed information on specific topics.
Installation Instructions	Installation of spare parts and accessories.

ℹ The device documentation is available online on the device product page and in the Downloads area: www.endress.com

Ordering information

Detailed ordering information is available from your nearest sales organization www.addresses.endress.com or in the Product Configurator at www.endress.com:

1. Select the product using the filters and search field.
2. Open the product page.

3. Select **Configuration**.

Product Configurator - the tool for individual product configuration
- Up-to-the-minute configuration data
- Depending on the device: Direct input of measuring point-specific information such as measuring range or operating language
- Automatic verification of exclusion criteria
- Automatic creation of the order code and its breakdown in PDF or Excel output format
- Ability to order directly in the Endress+Hauser Online Shop

Registered trademarks

HART®
Registered trademark of the FieldComm Group, Austin, USA

Modbus®
Registered trademark of SCHNEIDER AUTOMATION, INC.

Bluetooth®
The Bluetooth word mark and Bluetooth logos are registered trademarks of Bluetooth SIG. Inc. and any use of such marks by Endress+Hauser is under license. Other trademarks and trade names are those of their respective owners.

Apple®
Apple, the Apple logo, iPhone, and iPod touch are trademarks of Apple Inc., registered in the U.S. and other countries. App Store is a service mark of Apple Inc.

Android®
Android, Google Play and the Google Play logo are trademarks of Google Inc.

Function and system design

Measuring principle 8
Product design 8
IT security 9
Device-specific IT security 9

Measuring principle

Following *Faraday's law of magnetic induction*, a voltage is induced in a conductor moving through a magnetic field.

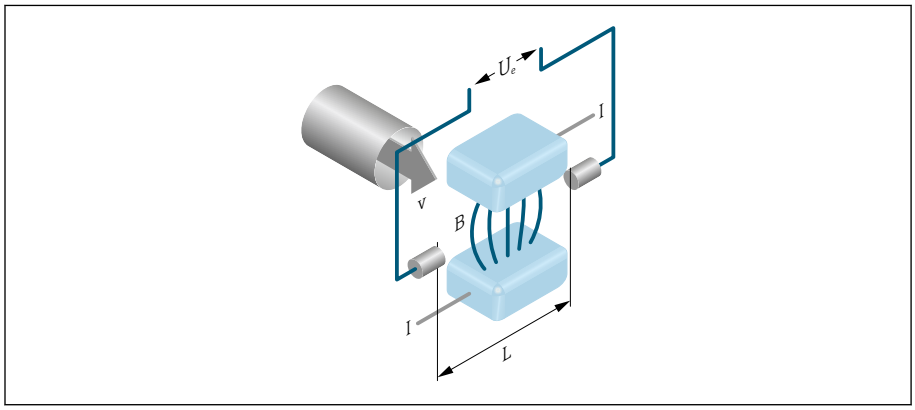

A0028962

Ue Induced voltage
B Magnetic induction (magnetic field)
L Electrode spacing
I Current
v Flow velocity

In the electromagnetic measuring principle, the flowing medium is the moving conductor. The voltage induced (U_e) is proportional to the flow velocity (v) and is supplied to the amplifier by means of two measuring electrodes. The flow volume (Q) is calculated via the pipe cross-section (A). The DC magnetic field is generated by a switched direct current of alternating polarity.

Formulae for calculation

- Induced voltage $U_e = B \cdot L \cdot v$
- Volume flow $Q = A \cdot v$

Product design

The device consists of a transmitter and a sensor.

Two device versions are available:

- Compact version – transmitter and sensor form a mechanical unit.
- Remote version - transmitter and sensor are mounted in separate locations.

Compact version

The transmitter and sensor form a mechanical unit.

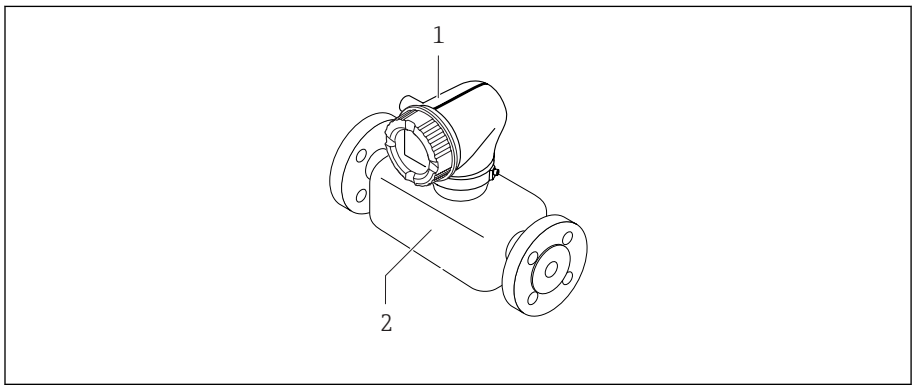

A0008262

1 Transmitter
2 Sensor

Remote version

The transmitter and sensor are mounted in physically separate locations.

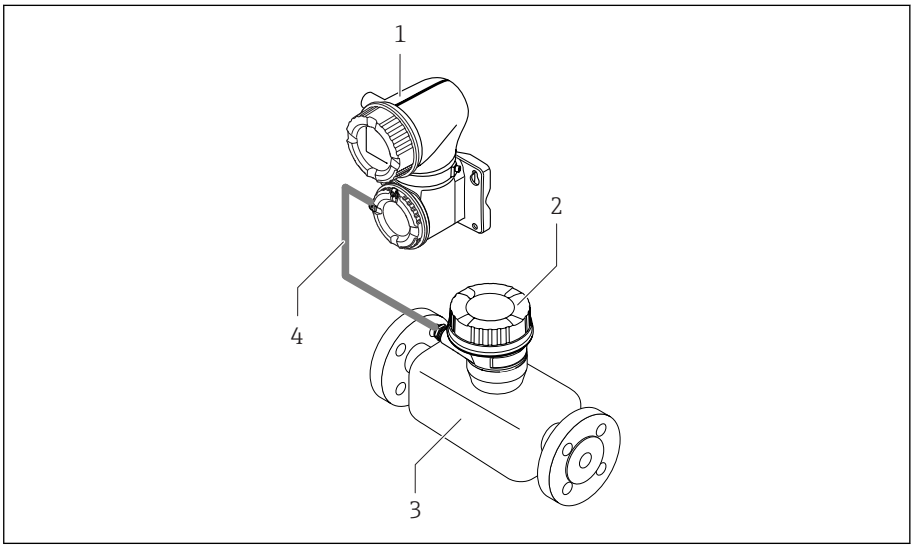

A0028196

1 *Transmitter*
2 *Sensor connection housing*
3 *Sensor*
4 *Connecting cable*

Measuring system

Proline 10 transmitter	Promag D sensor
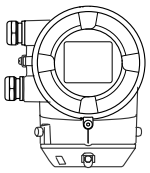 Compact version 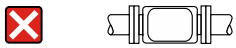 Remote version	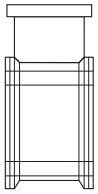

IT security

We only provide a warranty if the device is installed and used as described in the Operating Instructions. The device is equipped with security mechanisms to protect it against any inadvertent changes to the device settings.

IT security measures in line with operators' security standards and designed to provide additional protection for the device and device data transfer must be implemented by the operators themselves.

Device-specific IT security

Access via Bluetooth

Secure signal transmission via Bluetooth uses an encryption method tested by the Fraunhofer Institute.

- Without the SmartBlue App, the device is not visible via Bluetooth.
- Only one point-to-point connection is established between the device and a smartphone or tablet.

Access via the SmartBlue app

Two access levels (user roles) are defined for the device: the **Operator** user role and the **Maintenance** user role. The **Maintenance** user role is configured when the device leaves the factory.

If a user-specific access code is not defined (in the Enter access code parameter), the default setting **0000** continues to apply and the **Maintenance** user role is automatically enabled. The device's configuration data are not write-protected and can be edited at all times.

If a user-specific access code has been defined (in the Enter access code parameter), all the parameters are write-protected. The device is accessed with the **Operator** user role. When the user-specific access code is entered a second time, the **Maintenance** user role is enabled. All parameters can be written to.

For detailed information, see the "Description of Device Parameters" document pertaining to the device.

Protecting access via a password

There are a variety of ways to protect against write access to the device parameters:
- User-specific access code:
  Protect write access to the device parameters via all the interfaces.
- Bluetooth key:
  The password protects access and the connection between an operating unit, e.g. a smartphone or tablet, and the device via the Bluetooth interface.

General notes on the use of passwords
- The access code and Bluetooth key that are valid when the device is delivered must be redefined during commissioning.
- Follow the general rules for generating a secure password when defining and managing the access code and Bluetooth key.
- The user is responsible for the management and careful handling of the access code and Bluetooth key.

Write protection switch

The entire operating menu can be locked via the write protection switch. The values of the parameters cannot be changed. Write protection is disabled when the device leaves the factory.

Write protection is enabled with the write protection switch on the back of the display module.

Input

Measured variable 12
Operable flow range 12
Measuring range 12

Measured variable

Direct measured variables	Volume flow (proportional to induced voltage)
Calculated measured variables	Mass flow

Operable flow range

Over 1000 : 1

Measuring range

Typically v = 0.01 to 10 m/s (0.03 to 33 ft/s) with specified measuring accuracy

Electrical conductivity:
- ≥ 5 µS/cm for liquids in general
- ≥ 20 µS/cm for demineralized water

Flow characteristic values in SI units

Nominal diameter		Recommended flow	Factory settings		
		min./max. full scale value (v ~ 0.3/10 m/s)	Full scale value current output (v ~ 2.5 m/s)	Pulse value (~ 2 pulse/s)	Low flow cut off (v ~ 0.04 m/s)
[mm]	[in]	[dm³/min]	[dm³/min]	[dm³]	[dm³/min]
25	1	9 to 300	75	0.5	1
40	1 ½	25 to 700	200	1.5	3
50	2	35 to 1 100	300	2.5	5
65	–	60 to 2 000	500	5	8
80	3	90 to 3 000	750	5	12
100	4	145 to 4 700	1 200	10	20

Flow characteristic values in US units

Nominal diameter		Recommended flow	Factory settings		
		min./max. full scale value (v ~ 0.3/10 m/s)	Full scale value current output (v ~ 2.5 m/s)	Pulse value (~ 2 pulse/s)	Low flow cut off (v ~ 0.04 m/s)
[in]	[m1m]	[gal/min]	[gal/min]	[gal]	[gal/min]
1	25	2.5 to 80	18	0.2	0.25
1 ½	40	7 to 190	50	0.5	0.75
2	50	10 to 300	75	0.5	1.25
–	65	16 to 500	130	1	2
3	80	24 to 800	200	2	2.5
4	100	40 to 1 250	300	2	4

Output

Output versions 14
Output signal 14
Signal on alarm 17
Low flow cut off 17
Galvanic isolation 17
Protocol-specific data 17

Output versions

Order code for 020: output; input	Output version
Option B	▪ Current output 4 to 20 mA HART ▪ Pulse/frequency/switch output
Option M	▪ Modbus RS485 ▪ Current output 4 to 20 mA

Output signal

Current output 4 to 20 mA HART / 4 to 20 mA HART Ex-i

Signal mode	Choose via terminal assignment: ▪ Active ▪ Passive
Current range	Can be set to: ▪ 4 to 20 mA NAMUR ▪ 4 to 20 mA US ▪ 4 to 20 mA ▪ Fixed current
Max. output current	21.5 mA
Open-circuit voltage	DC < 28.8 V (active)
Max. input voltage	DC 30 V (passive)
Max. load	400 Ω
Resolution	1 µA
Damping	Configurable: 0 to 999.9 s
Assignable measured variables	▪ Off ▪ Volume flow ▪ Mass flow ▪ Conductivity* ▪ Noise* ▪ Coil current shot time* * Visibility depends on order options or device settings

Modbus RS485

Physical interface	RS485 in accordance with EIA/TIA-485 standard

Current output 4 to 20 mA

Signal mode	Choose via terminal assignment: ▪ Active ▪ Passive
Current range	Can be set to: ▪ 4 to 20 mA NAMUR ▪ 4 to 20 mA US ▪ 4 to 20 mA ▪ Fixed current
Max. output current	21.5 mA
Open-circuit voltage	DC < 28.8 V (active)
Max. input voltage	DC 30 V (passive)

Max. load	400 Ω
Resolution	1 µA
Damping	Configurable: 0 to 999.9 s
Assignable measured variables	▪ Off ▪ Volume flow ▪ Mass flow ▪ Conductivity* ▪ Noise* ▪ Coil current shot time* * Visibility depends on order options or device settings

Pulse/frequency/switch output

Function	Can be set to: ▪ Pulse output ▪ Frequency output ▪ Switch output
Version	Open collector: Passive
Input values	▪ DC 10.4 to 30 V ▪ Max. 140 mA
Voltage drop	▪ ≤ DC 2 V @ 100 mA ▪ ≤ DC 2.5 V @ max. input current

Pulse output	
Pulse width	Configurable: 0.05 to 2 000 ms
Max. pulse rate	10 000 Impulse/s
Pulse value	Configurable
Assignable measured variables	▪ Volume flow ▪ Mass flow

Frequency output	
Output frequency	Configurable: end value frequency 2 to 10 000 Hz (f_{max} = 12 500 Hz)
Damping	Configurable: 0 to 999.9 s
Pulse/pause ratio	1:1
Assignable measured variables	▪ Off ▪ Volume flow ▪ Mass flow ▪ Conductivity* ▪ Noise* ▪ Coil current shot time* ▪ Reference electrode potential against PE* * Visibility depends on order options or device settings

Switch output	
Switching behavior	Binary, conductive or non-conductive
Switching delay	Configurable: 0 to 100 s

Number of switching cycles	Unlimited

Assignable functions	▪ Off
	▪ On
	▪ Diagnostic behavior:
	  ▪ Alarm
	  ▪ Warning
	  ▪ Warning and alarm
	▪ Limit value:
	  ▪ Off
	  ▪ Volume flow
	  ▪ Mass flow
	  ▪ Flow velocity
	  ▪ Conductivity*
	  ▪ Corrected conductivity*
	  ▪ Totalizer 1…3
	▪ Flow direction monitoring
	▪ Status
	  ▪ **Empty pipe detection** option (only possible with extended transmitter)
	  ▪ Low flow cut off
	* Visibility depends on order options or device settings

Signal on alarm

Output behavior in the event of a device alarm (failure mode)

HART

Device diagnostics	Device condition can be read out via HART Command 48

Modbus RS485

Failure mode	Selectable: ▪ NaN value instead of current value ▪ Last valid value

Current output 4 to 20 mA

4 to 20 mA	Selectable: ▪ Min. value: 3.59 mA ▪ Max. value: 21.5 mA ▪ Freely definable value between: 3.59 to 21.5 mA ▪ Actual value ▪ Last valid value

Pulse/frequency/switch output

Pulse output	Selectable: ▪ Actual value ▪ No pulses
Frequency output	Selectable: ▪ Actual value ▪ 0 Hz ▪ Defined value: 0 to 12 500 Hz
Switch output	Selectable: ▪ Current status ▪ Open ▪ Closed

Low flow cut off

The switch points for low flow cut off are user-selectable.

Galvanic isolation

The outputs are galvanically isolated from one another and from earth.

Protocol-specific data

HART

Bus structure	The HART signal overlays the 4 to 20 mA current output.
Manufacturer ID	0x11
Device type ID	0x71
HART protocol revision	7
Device description files (DTM, DD)	Information and files under: www.endress.com

HART load	At least 250 Ω
System integration	Measured variables via HART protocol

Modbus RS485

Physical interface	RS485 in accordance with EIA/TIA-485 standard
Terminating resistor	Not integrated
Protocol	Modbus Applications Protocol Specification V1.1
Response times	▪ Direct data access: typically 25 to 50 ms ▪ Auto-scan buffer (data range): typically 3 to 5 ms
Device type	Slave
Slave address range	1 to 247
Broadcast address range	0
Function codes	▪ 03: Read holding register ▪ 04: Read input register ▪ 06: Write single registers ▪ 08: Diagnostics ▪ 16: Write multiple registers ▪ 23: Read/write multiple registers
Broadcast messages	Supported by the following function codes: ▪ 06: Write single registers ▪ 16: Write multiple registers ▪ 23: Read/write multiple registers
Supported baud rate	▪ 1 200 BAUD ▪ 2 400 BAUD ▪ 4 800 BAUD ▪ 9 600 BAUD ▪ 19 200 BAUD ▪ 38 400 BAUD ▪ 57 600 BAUD ▪ 115 200 BAUD
Data transfer mode	RTU
Data access	Each parameter can be accessed via Modbus RS485. For Modbus register information
System integration	Information on system integration . ▪ Modbus RS485 information ▪ Function codes ▪ Register information ▪ Response time ▪ Modbus data map

Power supply

Terminal assignment 20
Supply voltage 20
Power consumption 20
Current consumption 20
Power supply failure 21
Electrical connection 21
Potential equalization 25
Terminals 26
Cable entries 26
Overvoltage protection 26

Terminal assignment

The terminal assignment is documented on an adhesive label.

The following terminal assignment is available:

Current output 4 to 20 mA HART (active) and pulse/frequency/switch output

Supply voltage		Output 1				Output 2	
1 (+)	2 (–)	26 (+)	27 (–)	24 (+)	25 (–)	22 (+)	23 (–)
L/+	N/–	Current output 4 to 20 mA HART (active)		–		Pulse/frequency/switch output (passive)	

Current output 4 to 20 mA HART (passive) and pulse/frequency/switch output

Supply voltage		Output 1				Output 2	
1 (+)	2 (–)	26 (+)	27 (–)	24 (+)	25 (–)	22 (+)	23 (–)
L/+	N/–	–		Current output 4 to 20 mA HART (passive)		Pulse/frequency/switch output (passive)	

Modbus RS485 and current output 4 to 20 mA (active)

Supply voltage		Output 1				Output 2	
1 (+)	2 (–)	26 (+)	27 (–)	24 (+)	25 (–)	22 (B)	23 (A)
L/+	N/–	Current output 4 to 20 mA (active)		–		Modbus RS485	

Modbus RS485 and current output 4 to 20 mA (passive)

Supply voltage		Output 1				Output 2	
1 (+)	2 (–)	26 (+)	27 (–)	24 (+)	25 (–)	22 (B)	23 (A)
L/+	N/–	–		Current output 4 to 20 mA (passive)		Modbus RS485	

Supply voltage

Order code for "Power supply"	Terminal voltage		Frequency range
Option **D**	DC 24 V	–20 to +30 %	–
Option **E**	AC 100 to 240 V	–15 to +10 %	50/60 Hz,±5 Hz
Option **I**	DC 24 V	–20 to +30 %	–
	AC 100 to 240 V	–15 to +10 %	50/60 Hz, ±5 Hz
Option **M** non-hazardous area	DC 24 V	–20 to +30 %	–
	AC 100 to 240 V	–15 to +10 %	50/60 Hz, ±5 Hz

Power consumption

- Transmitter: max. 10 W (active power)
- Switch-on current: max. 36 A (< 5 ms) as per NAMUR Recommendation NE 21

Current consumption

- Max. 400 mA (24 V)
- Max. 200 mA (110 V, 50/60 Hz; 230 V, 50/60 Hz)

Power supply failure

- Totalizers stop at the last value measured.
- Device configuration remains unchanged.
- Error messages (incl. total operated hours) are stored.

Electrical connection

Transmitter terminal connections

Terminal assignment → *Terminal assignment*, 20

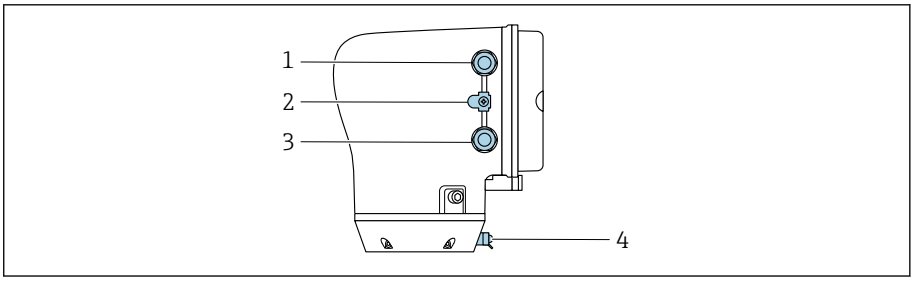

A0043283

1 Cable entry for power supply cable: supply voltage
2 Outer ground terminal: on transmitters made of polycarbonate with a metal pipe adapter
3 Cable entry for signal cable
4 Outer ground terminal

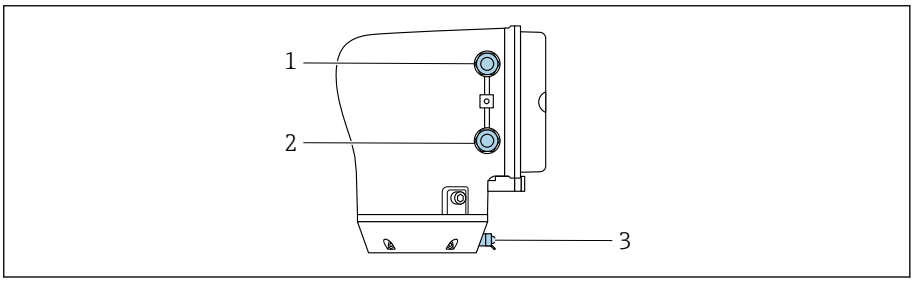

A0045438

1 Cable entry for power supply cable: supply voltage
2 Cable entry for signal cable
3 Outer ground terminal

Examples for electric terminals

Current output 4 to 20 mA HART (active)

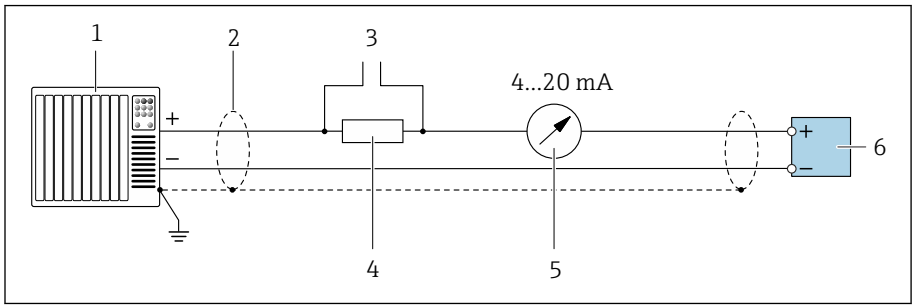

1 *Automation system with current input (e.g. PLC)*
2 *Cable shield*
3 *Connection for HART operating devices*
4 *Resistor for HART communication (≥ 250 Ω): observe max. load*
5 *Analog display unit: observe max. load.*
6 *Transmitter*

Current output 4 to 20 mA HART (passive)

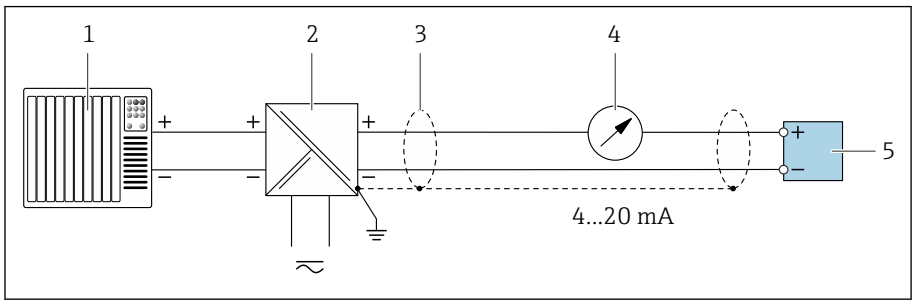

1 *Automation system with current input (e.g. PLC)*
2 *Active barrier for supply voltage (e.g. RN221N)*
3 *Cable shield*
4 *Analog display unit: observe max. load*
5 *Transmitter*

HART input (passive)

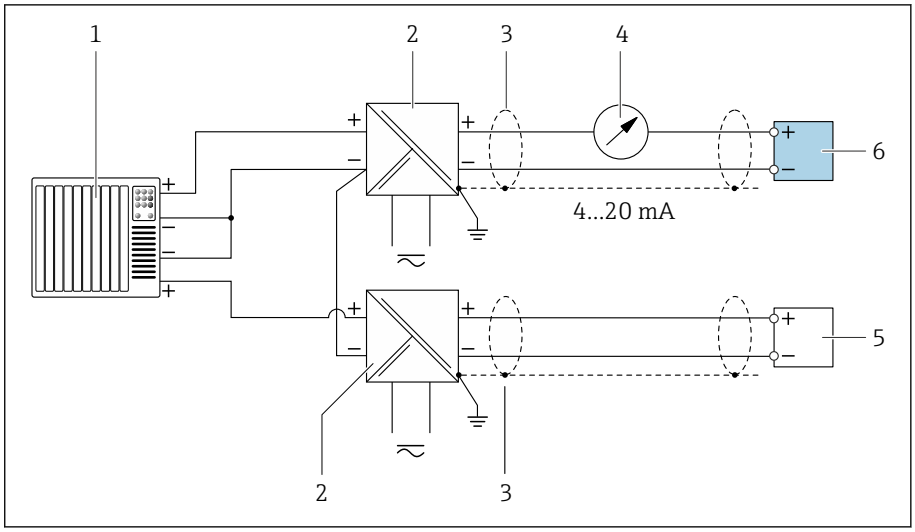

1 Connection example for HART input with a common negative (passive)

1 *Automation system with current input (e.g. PLC)*
2 *Active barrier for supply voltage (e.g. RN221N)*
3 *Cable shield*
4 *Analog display unit: observe max. load*
5 *Pressure transmitter (e.g. Cerabar M, Cerabar S: see requirements)*
6 *Transmitter*

Modbus RS485

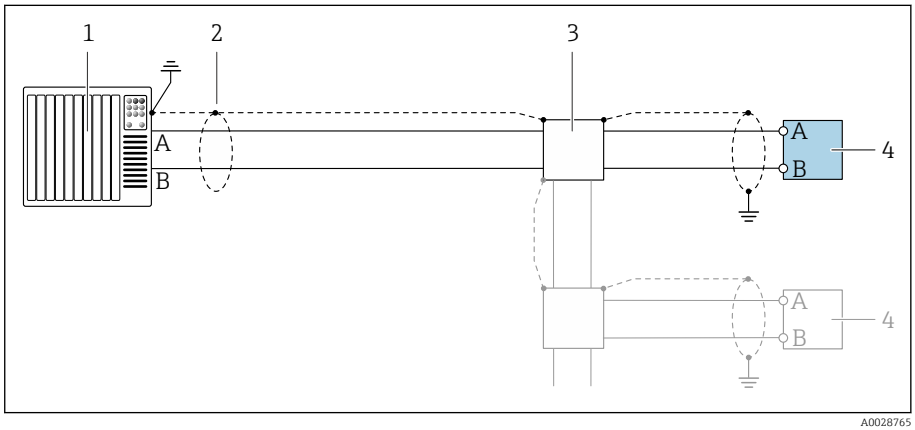

2 Connection example for Modbus RS485, non-hazardous area and Zone 2; Class I, Division 2

1 *Control system (e.g. PLC)*
2 *Cable shield*
3 *Distribution box*
4 *Transmitter*

Current output 4 to 20 mA (active)

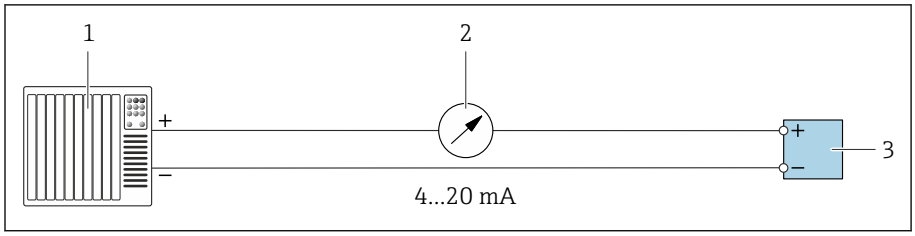

1 Automation system with current input (e.g. PLC)
2 Analog display unit: observe max. load
3 Transmitter

Current output 4 to 20 mA (passive)

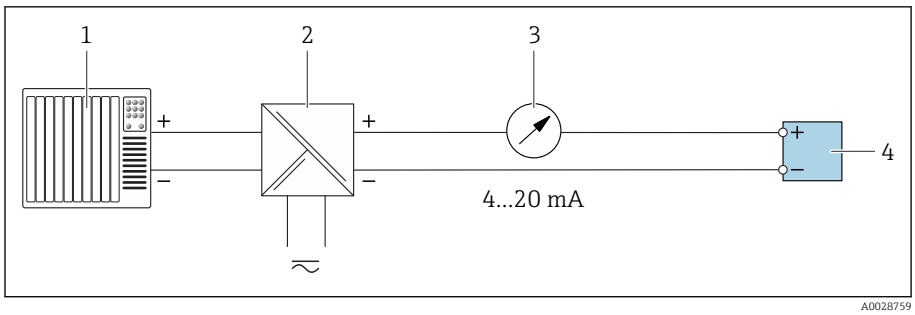

1 Automation system with current input (e.g. PLC)
2 Active barrier for supply voltage (e.g. RN221N)
3 Analog display unit: observe max. load
4 Transmitter

Pulse/frequency output (passive)

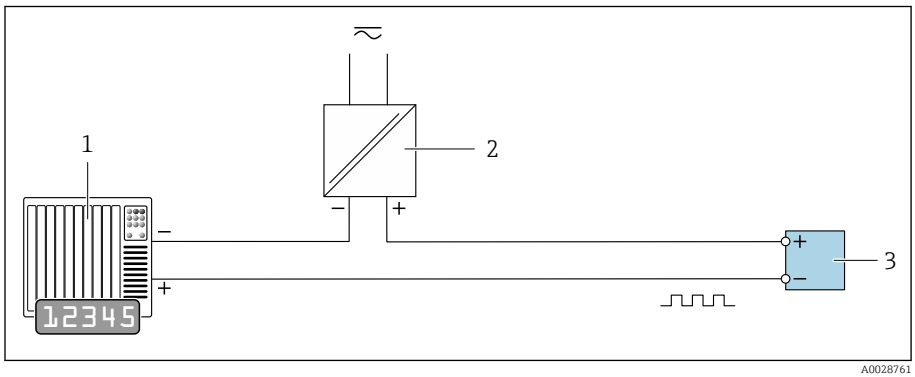

1 Automation system with pulse output and frequency input (e.g. PLC with a 10 kΩ pull-up or pull-down resistor)
2 Supply voltage
3 Transmitter: observe input values

Switch output (passive)

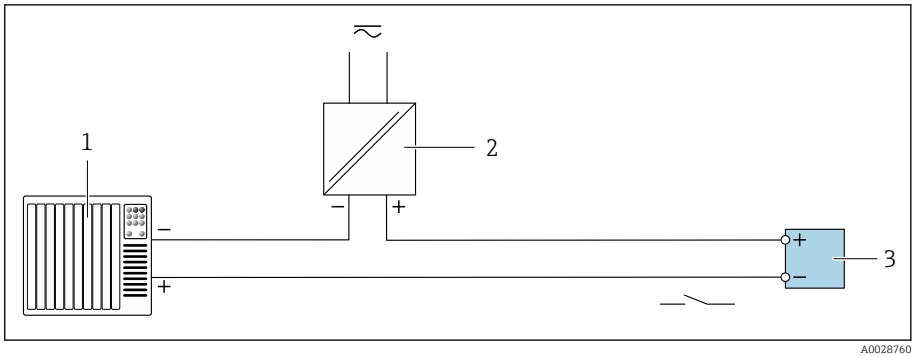

A0028760

1 *Automation system with switch input (e.g. PLC with a 10 kΩ pull-up or pull-down resistor)*
2 *Supply voltage*
3 *Transmitter: observe input values*

Potential equalization

Introduction

Correct potential equalization (equipotential bonding) is a prerequisite for stable and reliable flow measurement. Inadequate or incorrect potential equalization can result in device failure and present a safety hazard.

The following requirements must be observed to ensure correct, trouble-free measurement:
- The principle that the medium, the sensor and the transmitter must be at the same electrical potential applies.
- Take in-company grounding guidelines, materials and the grounding conditions and potential conditions of the pipe into consideration.
- The necessary potential equalization connections must be established using a ground cable with a minimum cross-section of 6 mm^2 (0.0093 in^2). Also use a cable lug.
- In the case of remote device versions, the ground terminal in the example always refers to the sensor and not to the transmitter.

Abbreviations used
- PE (Protective Earth): potential at the potential equalization terminals of the device
- P_P (Potential Pipe): potential of the pipe, measured at the flanges
- P_M (Potential Medium): potential of the medium

Connection examples for standard situations

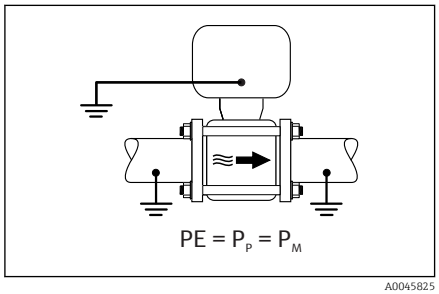

A0045825

Unlined and grounded metal pipe
- Potential equalization is via the measuring pipe.
- The medium is set to ground potential.

Starting conditions:
- Pipes are correctly grounded on both sides.
- Pipes are conductive and at the same electrical potential as the medium

► Connect the connection housing of the transmitter or sensor to ground potential via the ground terminal provided for this purpose.

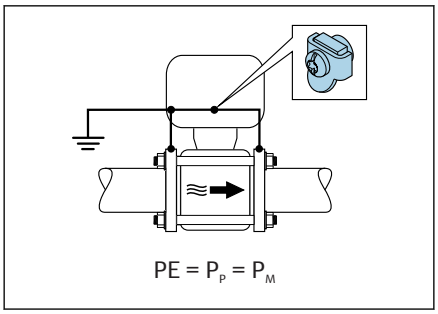

Plastic pipe or pipe with insulating liner
- Potential equalization is via the ground terminal and flanges
- The medium is set to ground potential.

Starting conditions:
- The pipe has an insulating effect.
- Low-impedance medium grounding close to the sensor is not guaranteed.
- Equalizing currents through the medium cannot be ruled out.

1. Connect flanges to the ground terminal of the transmitter or sensor connection housing via the ground cable.
2. Connect the connection to ground potential.

Connection example with the potential of medium not equal to potential equalization connection

In these cases, the medium potential can differ from the potential of the device.

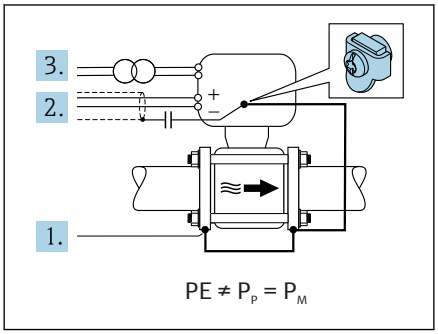

Metal, ungrounded pipe
The sensor and transmitter are installed in a way that provides electrical insulation from PE, e.g. applications for electrolytic processes or systems with cathodic protection.

Starting conditions:
- Unlined metal pipe
- Pipes with an electrically conductive liner

1. Connect the pipe flanges and transmitter via the ground cable.
2. Route the shielding of the signal lines via a capacitor (recommended value 1.5µF/ 50V).
3. Device connected to power supply such that it is floating in relation to the potential equalization connection (isolation transformer). This measure is not required in the case of 24V DC supply voltage without PE (= SELV power unit).

Terminals

Spring terminals
- Suitable for strands and strands with ferrules.
- Conductor cross-section 0.2 to 2.5 mm^2 (24 to 12 AWG).

Cable entries

- Cable gland: M20 × 1.5 for cable Ø6 to 12 mm (0.24 to 0.47 in)
- Thread for cable entry:
  - NPT ½"
  - G ½", G ½" Ex d
  - M20

Overvoltage protection

Mains voltage fluctuations	→ *Supply voltage*, 🖹 20
Overvoltage category	Overvoltage category II
Short-term, temporary overvoltage	Between cable and neutral conductor up to 1200 V for max. 5s
Long-term, temporary overvoltage	Up to 500 V between cable and ground

Cable specification

Requirements for connecting cable 28
Ground cable requirements 28
Connecting cable requirements 28

Requirements for connecting cable

Electrical safety

As per applicable national regulations.

Permitted temperature range

- Observe the installation guidelines that apply in the country of installation.
- The cables must be suitable for the minimum temperatures and maximum temperatures to be expected.

Power supply cable (incl. conductor for the inner ground terminal)

- A standard installation cable is sufficient.
- Provide grounding according to applicable national codes and regulations.

Signal cable

- Current output 4 to 20 mA HART:
  A shielded cable is recommended, observe the grounding concept of the facility.
- Pulse/frequency/switch output:
  Standard installation cable
- Modbus RS485:
  Cable type A according to EIA/TIA-485 standard is recommended
- Current output 4 to 20 mA:
  Standard installation cable

Ground cable requirements

Copper wire: at least 6 mm^2 (0.0093 in^2)

Connecting cable requirements

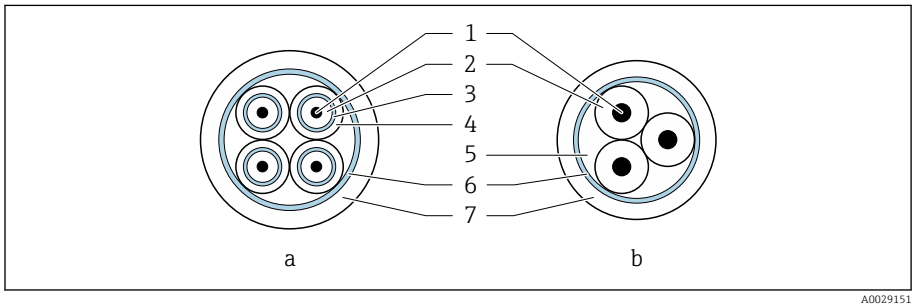

A0029151

3 Cable cross-section

a Electrode cable
b Coil current cable
1 Core
2 Core insulation
3 Core shield
4 Core jacket
5 Core reinforcement
6 Cable shield
7 Outer jacket

Armored connecting cable
Armored connecting cables with additional, metal reinforcing braid can be ordered from Endress+Hauser. Armored connecting cables are used:
- When laying the cable directly in the ground
- Where there is a risk of damage from rodents
- If using the device below IP68 degree of protection

Electrode cable

Design	3×0.38 mm² (20 AWG) with common, braided copper shield (ø ~ 9.5 mm (0.37 in)) and individual shielded cores
Conductor resistance	≤ 50 Ω/km (0.015 Ω/ft)
Capacitance: core/shield	≤ 420 pF/m (128 pF/ft)
Cable length	Depends on the medium conductivity: maximum 200 m (656 ft)
Cable lengths (available for order)	5 m (15 ft), 10 m (30 ft), 20 m (60 ft) or variable length: maximum 200 m (656 ft) Armored cables: variable length up to maximum 200 m (656 ft)
Operating temperature	−20 to +80 °C (−4 to +176 °F)

Coil current cable

Design	3×0.38 mm² (20 AWG) with common, braided copper shield (ø ~ 9.5 mm (0.37 in)) and individual shielded cores
Conductor resistance	≤ 37 Ω/km (0.011 Ω/ft)
Capacitance: core/shield	≤ 120 pF/m (37 pF/ft)
Cable length	Depends on the medium conductivity, max. 200 m (656 ft)
Cable lengths (available for order)	5 m (15 ft), 10 m (30 ft), 20 m (60 ft) or variable length up to max. 200 m (656 ft) Armored cables: variable length up to max. 200 m (656 ft)
Operating temperature	−20 to +80 °C (−4 to +176 °F)
Test voltage for cable insulation	≤ AC 1 433 V rms 50/60 Hz or ≥ DC 2 026 V

Performance characteristics

Reference operating conditions 32
Maximum measured error 32
Repeatability 32
Influence of ambient temperature 32

Reference operating conditions

- Error limits based on ISO 20456:2017
- Water, typically: +15 to +45 °C (+59 to +113 °F); 0.5 to 7 bar (73 to 101 psi)
- Data as indicated in the calibration protocol
- Accuracy based on accredited calibration rigs according to ISO 17025

To obtain measured errors, use the *Applicator* sizing tool → *Service-specific accessory* , 📄 87

Maximum measured error

o. r. = of reading

Error limits under reference operating conditions

Volume flow

±0.5 % o. r.±1 mm/s (±0.04 in/s)

Fluctuations in the supply voltage do not have any effect within the specified range.

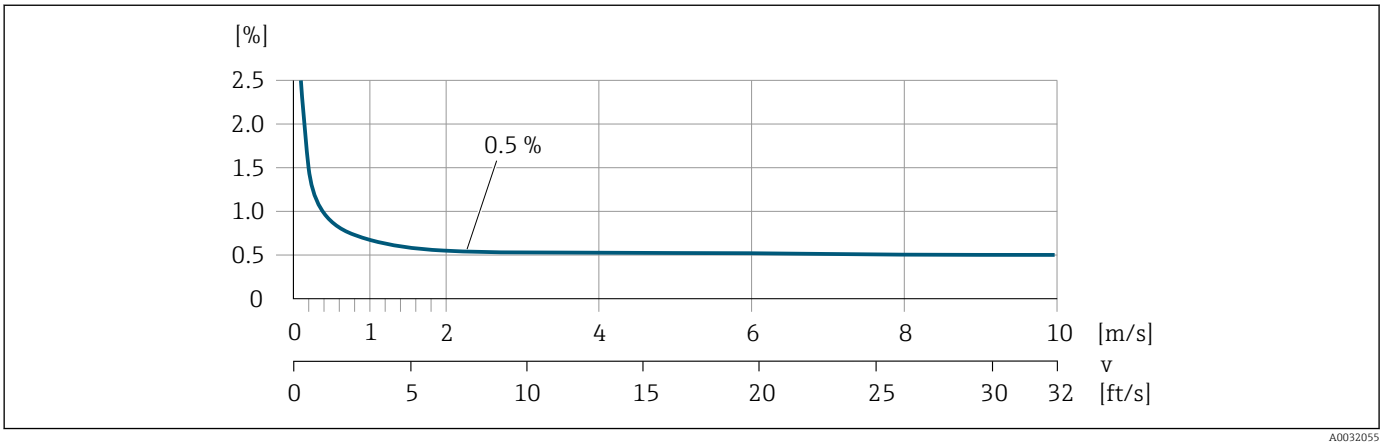

A0032055

Accuracy of outputs

Current output	±5 µA
Pulse/frequency output	Max. ±100 ppm o. r. (across the entire ambient temperature range)

Repeatability

Volume flow	Max. ±0.1 % o. r. ± 0.5 mm/s (0.02 in/s)

Influence of ambient temperature

Current output	Temperature coefficient max. 1 µA/°C
Pulse/frequency output	No additional effect. Is included in the accuracy.

Installation

Installation conditions 34

Installation conditions

Flow direction

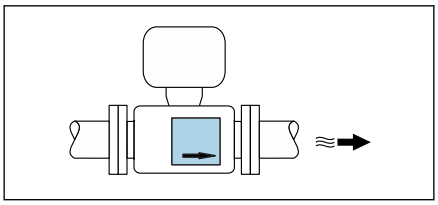

A0041163

Install the device in the direction of flow.

Note the direction of arrow on the nameplate.

Installation with inlet runs and outlet runs

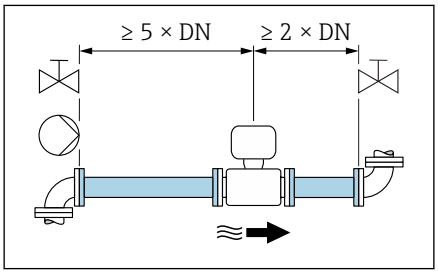

A0028997

Ensure straight, undisturbed inlet and outlet runs.

To avoid negative pressure and to comply with accuracy specifications, install the sensor upstream from assemblies that produce turbulence (e.g. valves, T-sections) and downstream from pumps → *Installation near pumps*, 37.

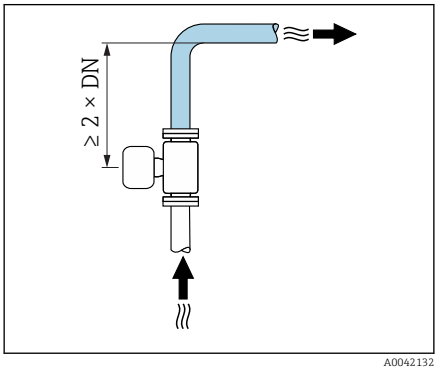

A0042132

Keep a sufficient distance to the next pipe elbow.

Orientations

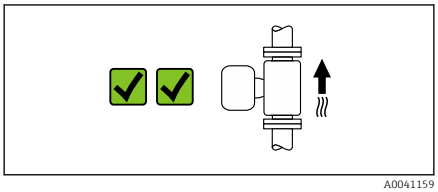

A0041159

Vertical orientation, upward direction of flow
For all applications.

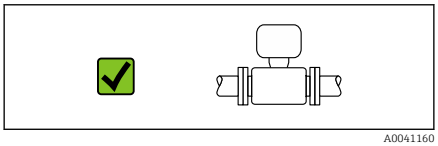

A0041160

Horizontal orientation, transmitter at top
This orientation is suitable for the following applications:
For low process temperatures in order to maintain the minimum ambient temperature for the transmitter.

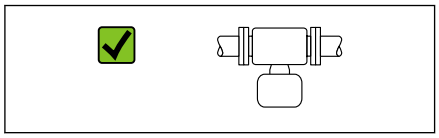

A0041161

Horizontal orientation, transmitter at bottom

This orientation is suitable for the following applications:

- For high process temperatures in order to maintain the maximum ambient temperature for the transmitter.
- To prevent the electronics from overheating in the event of strong heat formation (e.g. CIP or SIP cleaning process), install the measuring device with the transmitter part pointing downwards.

This orientation is not suitable for the following applications:
If empty pipe detection is to be used.

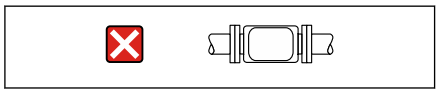

A0048872

Horizontal orientation, transmitter at side

This orientation is not suitable

Vertical

Optimum for self-emptying pipe systems.

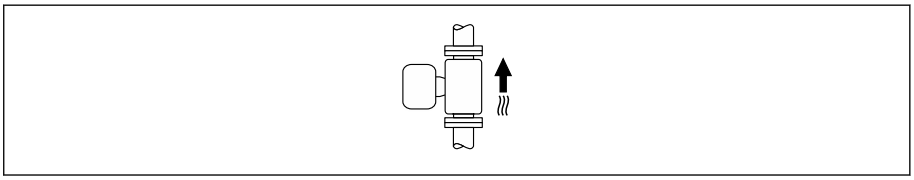

A0015591

Horizontal

Ideally, the measuring electrode plane should be horizontal. This prevents brief insulation of the measuring electrodes by entrained air bubbles.

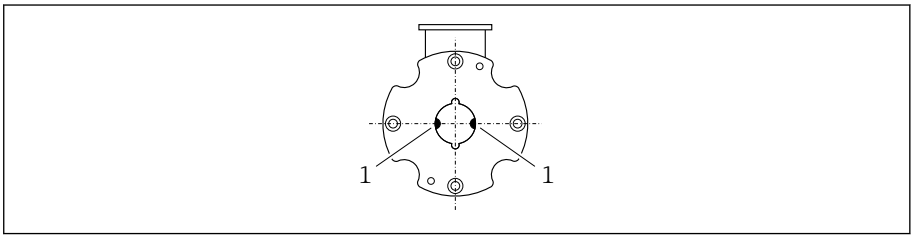

A0017195

1 Measuring electrodes for signal detection

Mounting locations

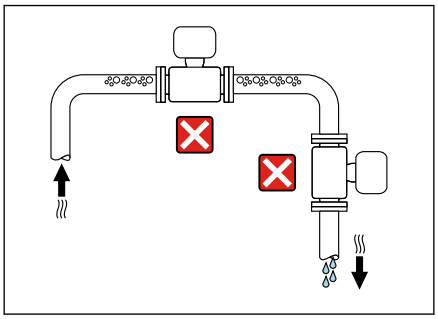

A0042131

- Do not install the device at the highest point of the pipe.
- Do not install the device upstream from a free pipe outlet in a down pipe.

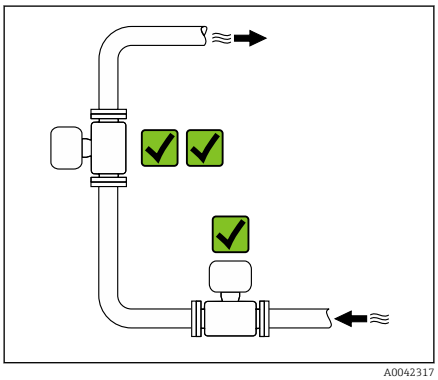

A0042317

The device should ideally be installed in an ascending pipe.

Installation near control valves

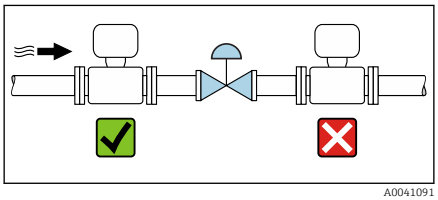

A0041091

Install the device in the direction of flow upstream from the control valve.

Installation upstream from a down pipe

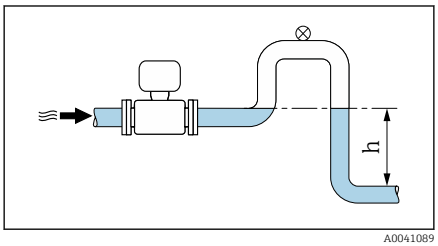

A0041089

NOTICE

Negative pressure in the measuring pipe can damage the liner!

- ▶ If installing upstream from down pipes with a length h ≥ 5 m (16.4 ft): install a siphon with a vent valve downstream from the device.

This arrangement prevents the flow of liquid stopping in the pipe and air entrainment.

Installation with partially filled pipes

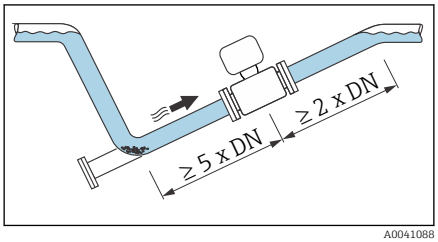

A0041088

- Partially filled pipes with a gradient require a drain-type configuration.
- The installation of a cleaning valve is recommended.

Installation near pumps

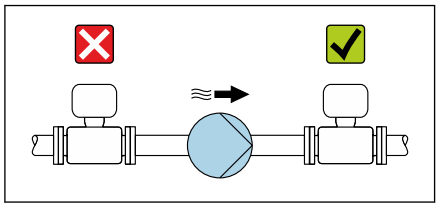

A0041083

NOTICE

Negative pressure in the measuring pipe can damage the liner!

- ▶ Install the device in the direction of flow downstream from the pump.
- ▶ Install pulsation dampers if reciprocating, diaphragm or peristaltic pumps are used.

- Information on the liner's resistance to partial vacuum (Verweisziel existiert nicht, aber @y.link.required='true')
- Information on the measuring system's resistance to vibration and shock → *Vibration-resistance and shock-resistance*, 40

Pipe vibrations

A remote version is recommended in the event of strong pipe vibrations.

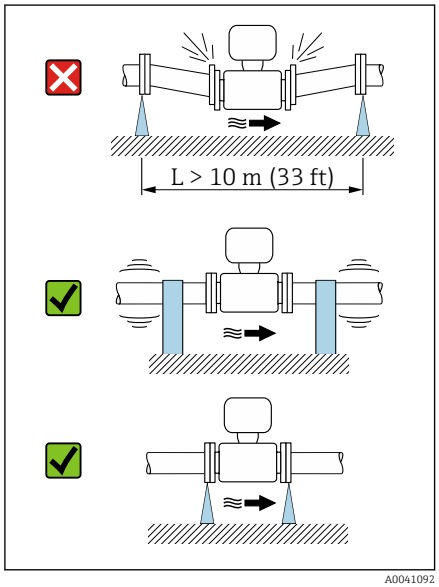

A0041092

NOTICE

Pipe vibrations can damage the device!

- ▶ Do not expose the device to strong vibrations.
- ▶ Support the pipe and fix it in place.
- ▶ Support the device and fix it in place.
- ▶ Mount the sensor and transmitter separately.

Adapters

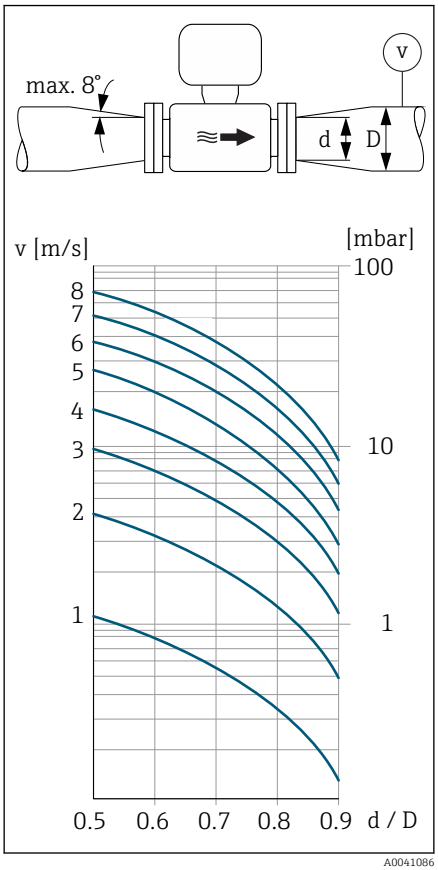

A0041086

Suitable adapters (double-flange reducers) can be used to install the sensor in larger-diameter pipes. The resulting higher rate of flow improves measuring accuracy with very slow-moving media.

The nomogram shown here can be used to calculate the pressure loss caused by reducers and expanders. It only applies to liquids with a viscosity similar to that of water.

1. Calculate the ratio of the diameters d/D.
2. Determine the flow velocity after the reduction.
3. From the chart, determine the pressure loss as a function of the flow velocity v and the d/D ratio.

Seals

Note the following when installing seals:
- Use seals with a hardness rating of 70° Shore.
- For DIN flanges: only install seals according to DIN EN 1514-1.

Magnetism and static electricity

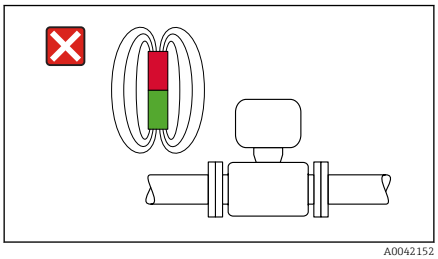
A0042152

Do not install the device near magnetic fields, e.g. motors, pumps, transformers.

Outdoor use

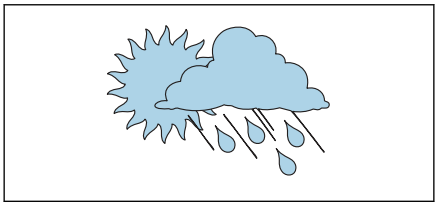
A0023989

- Avoid exposure to direct sunlight.
- Install in a location protected from sunlight.
- Avoid direct exposure to weather conditions.
- Use a weather protection cover → *Transmitter*, 86.

Environment

Ambient temperature range 40
Storage temperature 40
Relative humidity 40
Operating height 40
Degree of protection 40
Vibration-resistance and shock-resistance 40
Electromagnetic compatibility (EMC) 41

Ambient temperature range

Transmitter	−40 to +60 °C (−40 to +140 °F)
Local display	−20 to +60 °C (−4 to +140 °F) The readability of the display may be impaired at temperatures outside the temperature range.
Sensor	−20 to +60 °C (−4 to +140 °F)
Liner	Do not exceed or fall below the permitted temperature range of the liner .

Dependency of ambient temperature on medium temperature → *Medium temperature range*, 44

Storage temperature

The storage temperature corresponds to the ambient temperature range of the transmitter and sensor.

Relative humidity

The device is suitable for use in outdoor and indoor areas with a relative humidity of 5 to 95%.

Operating height

According to EN 61010-1
- Without overvoltage protection: ≤ 2 000 m
- With overvoltage protection: > 2 000 m

Degree of protection

Transmitter	▪ IP66/67, Type 4X enclosure, suitable for pollution degree 4 ▪ Open housing: IP20, Type 1 enclosure, suitable for pollution degree 2
Sensor	IP66/67, Type 4X enclosure, suitable for pollution degree 4

Vibration-resistance and shock-resistance

Compact version

Vibration, sinusoidal ▪ Following IEC 60068-2-6 ▪ 20 cycles per axis	2 to 8.4 Hz 8.4 to 2 000 Hz	3.5 mm peak 1 g peak
Vibration, broad-band random ▪ Following IEC 60068-2-64 ▪ 120 min per axis	10 to 200 Hz 200 to 2 000 Hz	0.003 g^2/Hz 0.001 g^2/Hz (1.54 g rms)
Shocks, half-sine ▪ Following IEC 60068-2-27 ▪ 3 positive and 3 negative shocks	6 ms 30 g	

Shock
Due to rough handling according to IEC 60068-2-31.

Remote version (sensor)

Vibration, sinusoidal ▪ Following IEC 60068-2-6 ▪ 20 cycles per axis	2 to 8.4 Hz 8.4 to 2 000 Hz	7.5 mm peak 1 g peak

Vibration, broad-band random ▪ Following IEC 60068-2-6 ▪ 120 min per axis	10 to 200 Hz 200 to 2 000 Hz	0.01 g^2/Hz 0.003 g^2/Hz (2.7 g rms)
Shocks, half-sine ▪ Following IEC 60068-2-6 ▪ 3 positive and 3 negative shocks	6 ms 50 g	

Shock
Due to rough handling according to IEC 60068-2-31.

Electromagnetic compatibility (EMC)

As per IEC/EN 61326 and NAMUR Recommendation NE 21.

For more information: Declaration of Conformity

Process

Medium temperature range 44
Conductivity 44
Flow limit 44
Pressure-temperature ratings 45
Pressure tightness 45
Pressure loss 45

Medium temperature range

0 to +60 °C (+32 to +140 °F)

Conductivity

The minimum conductivity is:
- 5 µS/cm for liquids in general
- 20 µS/cm for demineralized water

The following basic conditions must be observed for < 20 µS/cm:
- Order code 013 for "Functionality", option D "Extended transmitter" and higher output signal damping is recommended for values under 20 µS/cm.
- Observe the maximum permitted cable length L_{max}. This length is determined by the conductivity of the medium.
- With order code 013 "Functionality", option A "Standard transmitter" and empty pipe detection (EPD) switched on, the minimum conductivity is 20 µS/cm.
- With order code 013 "Functionality", option A "Standard transmitter" - remote version, empty pipe detection may not be activated if L_{max} > 20 m.

Note that in the case of the remote version, the minimum conductivity depends on the cable length.

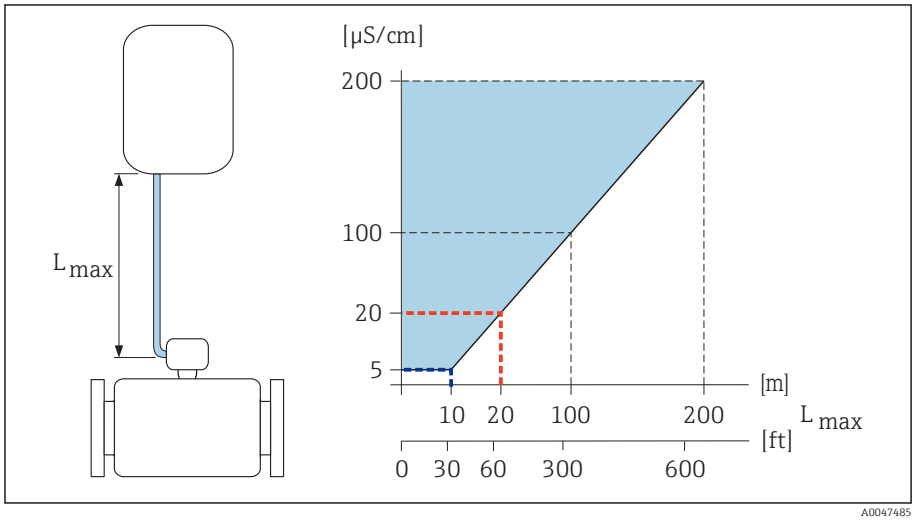

4 *Permitted length of connecting cable*

Colored area = permitted range
L_{max} = length of connecting cable in [m] ([ft])
[µS/cm] = medium conductivity
Red line = order code 013 "Functionality", option A "Standard transmitter"
Blue line = order code 013 "Functionality", option D "Extended transmitter"

Flow limit

Pipe diameter and flow rate determine the nominal diameter of the sensor.

The flow velocity is increased by reducing the sensor nominal diameter.

2 to 3 m/s (6.56 to 9.84 ft/s)	Optimum flow velocity
v < 2 m/s (6.56 ft/s)	For abrasive media, e.g. potter's clay, lime milk, ore slurry
v > 2 m/s (6.56 ft/s)	For media producing buildup, e.g. wastewater sludge

Pressure-temperature ratings

Permitted process pressure

Fixed flange according to EN 1092-1 Fixed flange according to ASME B16.5 Fixed flange according to JIS B2220	
Stainless steel	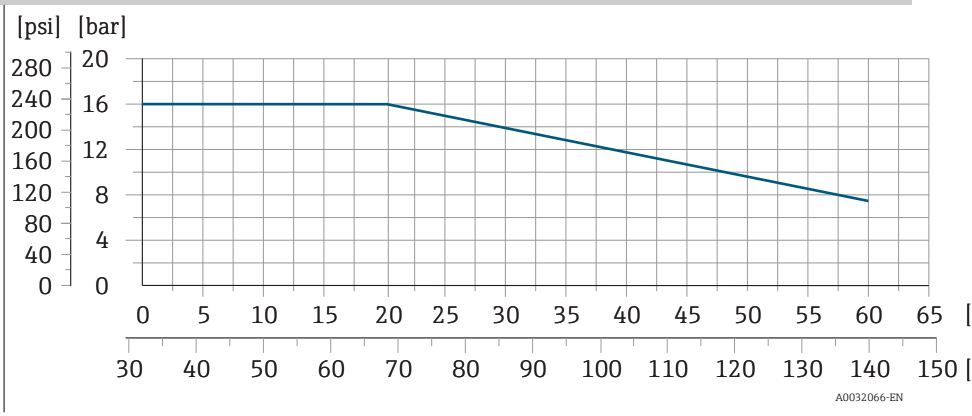

Pressure tightness

Measuring tube: 0 mbar abs. (0 psi abs.) at a medium temperature of ≤ +60 °C (+140 °F)

Pressure loss

- No pressure loss: transmitter installed in a pipe with the same nominal diameter.
- Pressure loss information when adapters are used → *Adapters*, 🖹 38

Mechanical construction

Weight 48
Measuring tube specification 49
Materials 50
Mounting bolts 51
Fitted electrodes 51
Process connections 52

Weight

All values refer to devices with flanges with a standard pressure rating.
Weight data are guideline values. The weight may be lower than indicated depending on the pressure rating and design.

Transmitter remote version
- Polycarbonate: 1.4 kg (3.1 lbs)
- Aluminum: 2.4 kg (5.3 lbs)

Sensor remote version
Aluminum sensor connection housing: see the information in the following table.

Compact version

Weight in SI units

DN		Weight
[mm]	[in]	[kg]
25	1	3.20
40	1½	3.80
50	2	4.60
65	–	5.40
80	3	6.40
100	4	9.10

Weight in US units

DN		Weight
[mm]	[in]	[lbs]
25	1	7
40	1½	8
50	2	10
65	–	12
80	3	14
100	4	20

Remote version

Weight in SI units

DN		Weight
[mm]	[in]	[kg]
25	1	2.5
40	1½	3.1
50	2	3.9
65	–	4.7
80	3	5.7
100	4	8.4

Weight in US units

DN		Weight
[mm]	[in]	[kg]
25	1	6
40	1½	7
50	2	9
65	–	10
80	3	13
100	4	19

Measuring tube specification

Wafer version

Pressure rating EN (DIN), PN16

DN		Mounting bolts			Centering sleeves Length		Measuring tube Internal diameter	
[mm]	[in]		[mm]	[in]	[mm]	[in]	[mm]	[in]
25	1	4 × M12 ×	145	5.71	54	2.13	24	0.94
40	1 ½	4 × M16 ×	170	6.69	68	2.68	38	1.50
50	2	4 × M16 ×	185	7.28	82	3.23	50	1.97
65 [1]	–	4 × M16 ×	200	7.87	92	3.62	60	2.36
65 [2]	–	8 × M16 ×	200	7.87	– [3]	–	60	2.36
80	3	8 × M16 ×	225	8.86	116	4.57	76	2.99
100	4	8 × M16 ×	260	10.24	147	5.79	97	3.82

1) EN (DIN) flange: 4-hole→ with centering sleeves
2) EN (DIN) flange: 8-hole → without centering sleeves
3) A centering sleeve is not required. The device is centered directly via the sensor housing.

Pressure rating ASME, Class 150

DN		Mounting bolts			Centering sleeves Length		Measuring tube Internal diameter	
[mm]	[in]		[mm]	[in]	[mm]	[in]	[mm]	[in]
25	1	4 × UNC ½" ×	145	5.70	– [1]	–	24	0.94
40	1 ½	4 × UNC ½" ×	165	6.50	–	–	38	1.50
50	2	4 × UNC 5/8" ×	190.5	7.50	–	–	50	1.97
80	3	8 × UNC 5/8" ×	235	9.25	–	–	76	2.99
100	4	8 × UNC 5/8" ×	264	10.4	147	5.79	97	3.82

1) A centering sleeve is not required. The device is centered directly via the sensor housing.

Pressure rating JIS, 10K

DN		Mounting bolts			Centering sleeves Length		Measuring tube Internal diameter	
[mm]	[in]		[mm]	[in]	[mm]	[in]	[mm]	[in]
25	1	4 × M16 ×	170	6.69	54	2.13	24	0.94
40	1 ½	4 × M16 ×	170	6.69	68	2.68	38	1.50
50	2	4 × M16 ×	185	7.28	– [1]	–	50	1.97
65	–	4 × M16 ×	200	7.87	–	–	60	2.36
80	3	8 × M16 ×	225	8.86	–	–	76	2.99
100	4	8 × M16 ×	260	10.24	–	–	97	3.82

1) A centering sleeve is not required. The device is centered directly via the sensor housing.

Threaded connection

Pressure rating EN (DIN), PN16

DN		Threaded connection	Wrench size Length		Measuring tube Internal diameter	
[mm]	[in]		[mm]	[in]	[mm]	[in]
25	1	G 1"	28	1.1	24	0.94
40	1 ½	G 1 ½"	50	1.97	38	1.50
50	2	G 2"	60	2.36	50	1.97

Pressure rating ASME, Class 150

DN		Threaded connection	Wrench size Length		Measuring tube Internal diameter	
[mm]	[in]		[mm]	[in]	[mm]	[in]
25	1	NPT 1"	28	1.1	24	0.94
40	1 ½	NPT 1 ½"	50	1.97	38	1.50
50	2	NPT 2"	60	2.36	50	1.97

Materials

Transmitter housing	
Order code for "Housing"	▪ Option A: aluminum, AlSi10Mg, coated ▪ Option M: polycarbonate
Window material	▪ Order code for "Housing" option A: glass ▪ Order code for "Housing" option M: polycarbonate

Sensor connection housing	
Order code for "Sensor connection housing"	Option A: aluminum, AlSi10Mg, coated

Cable glands and entries	
Cable gland M20×1.5	Plastic
Adapter for cable entry with female thread G ½" or NPT ½"	Nickel-plated brass

Connecting cable for remote version	
	Electrode and coil current cable: PVC cable with copper shield

Sensor housing	
	Aluminum, AlSi10Mg, coated

Measuring tube	
	Polyamide

Liner	
	Polyamide

Electrodes	
	Stainless steel: 1.4435 (316L)

Seals	
	As per DIN EN 1514-1, form IBC

Process connections	
EN 1092-1 (DIN 2501)	1.4301/304
ASME B16.5	1.4301/304
JIS B2220	1.4301/304
DIN ISO 228, G" male thread	1.4301/304
ASME B1.20, NPT" male thread	1.4301/304

Accessories	
Protective cover	Stainless steel, 1.4404 (316L)
Pipe mounting set	Stainless steel 1.4301 (304)
Wall mounting kit	Stainless steel 1.4301 (304)

Mounting bolts

Tensile strength

- Galvanized steel mounting bolts: strength category 5.6 or 5.8
- Stainless steel mounting bolts: strength category A2–70

Fitted electrodes

Standard electrodes:
Measuring electrodes

Process connections

- EN 1092-1 (DIN 2501)
- ASME B16.5
- JIS B2220
- DIN ISO 228, G external thread
- ASME B1.20, NPT external thread

Dimensions in SI units

Compact version 54
Wafer version 54
Threaded version 55

Remote version 56
Transmitter remote version 56
Sensor remote version 57

Flange connections 59
Flange as per EN 1092-1: PN 16 59
Flange according to ASME B16.5: Class 150 60
Flange JIS B2220: 10K 61

Couplings 62
External thread: ISO 228 62
External thread: ASME B1.20.1 62

Accessories 63
Protective cover 63

Compact version

Wafer version

Order code for "Housing", option A "Compact, aluminum, coated"

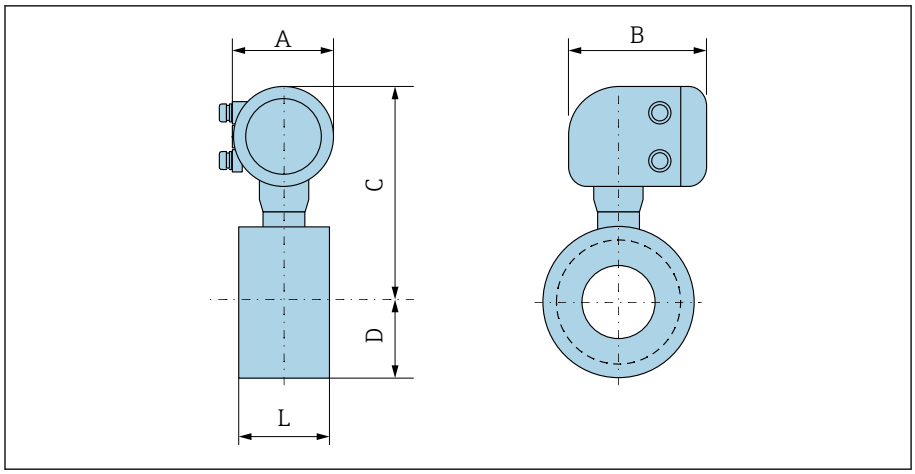

DN		A [1]	B	C	D	L
[mm]	[in]	[mm]	[mm]	[mm]	[mm]	[mm]
25	1	139	178	259	43	55
40	1 ½	139	178	270	52	69
50	2	139	178	281	62	83
65	–	139	178	291	70	93
80	–	139	178	295	76	117
–	3	139	178	295	76	117
100	4	139	178	309	89	148

1) Depending on the cable entry used: values up to +30 mm

Threaded version

Order code for "Housing", option A "Compact, aluminum, coated"

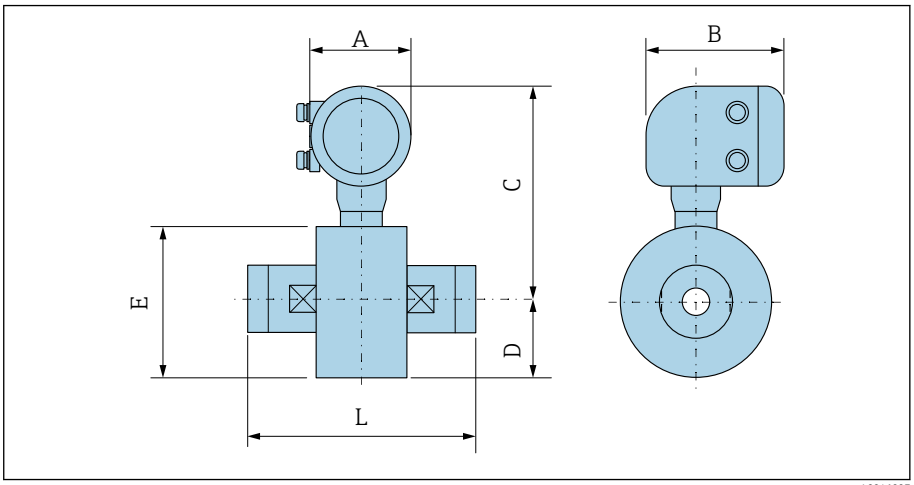

A0046007

DN		A [1]	B	C	D	E	L
[mm]	[in]	[mm]	[mm]	[mm]	[mm]	[mm]	[mm]
25	1	139	178	259	43	86	110
40	1 ½	139	178	270	52	104	140
50	2	139	178	281	62	124	200

1) Depending on the cable entry used: values up to +30 mm

Remote version

Transmitter remote version

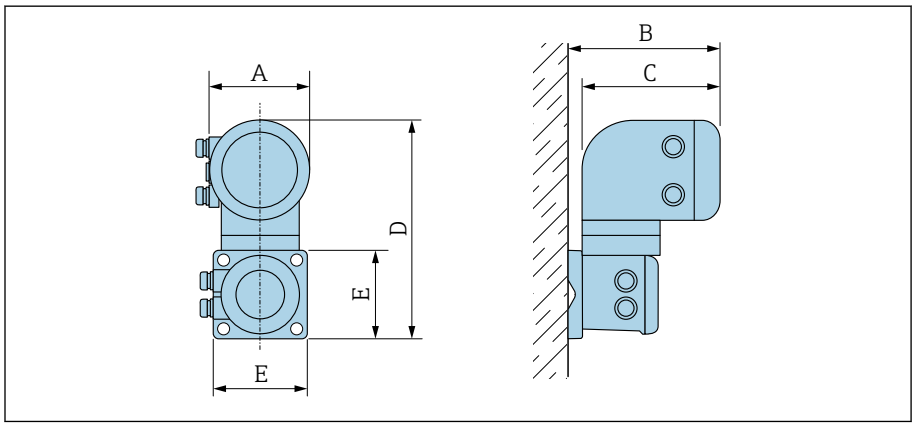

Order code for "Housing"	A [1] [mm]	B [mm]	C [mm]	D [mm]	E [mm]
Option N "Remote, polycarbonate"	132	187	172	307	130
Option P "Remote, aluminum, coated"	139	185	178	309	130

1) Depending on the cable entry used: values up to + 30 mm

Sensor remote version

Wafer version

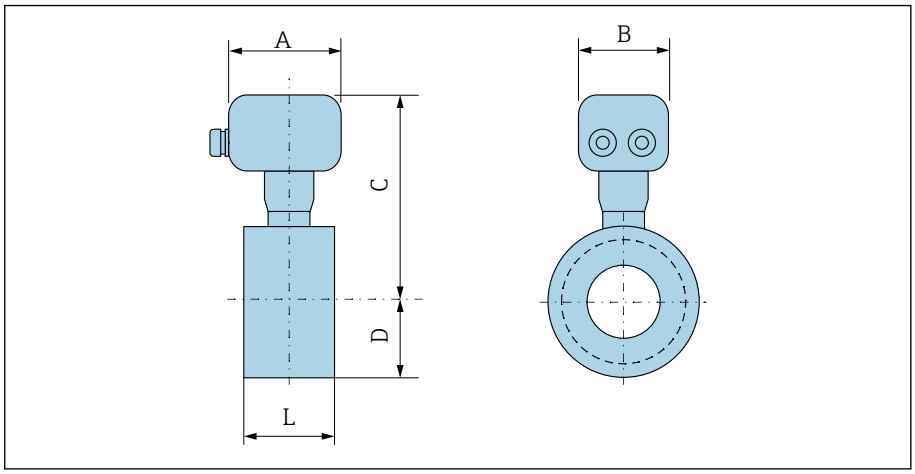

DN		A [1]	B	C	D	L
[mm]	[in]	[mm]	[mm]	[mm]	[mm]	[mm]
25	1	113	112	199	43	55
40	1 ½	113	112	210	52	69
50	2	113	112	221	62	83
65	–	113	112	231	70	93
80	–	113	112	235	76	117
–	3	113	112	235	76	117
100	4	113	112	249	89	148

1) Depending on the cable entry used: values up to +30 mm

Threaded connection

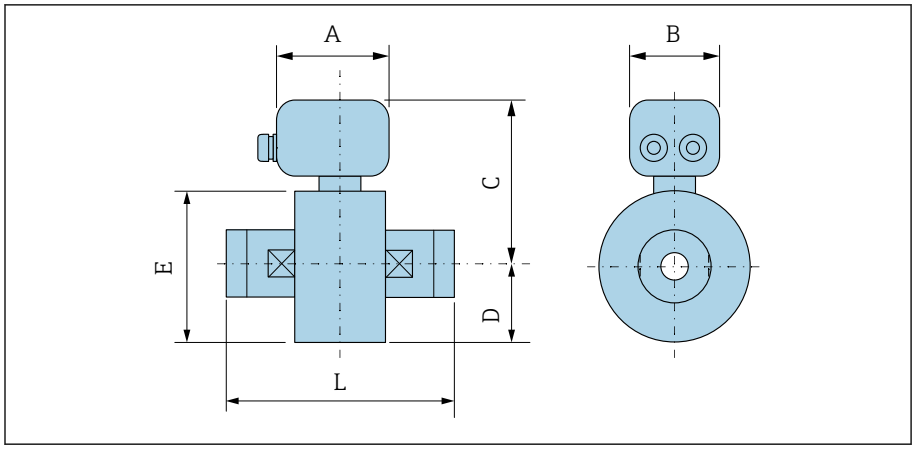

DN		A [1]	B	C	D	E	L
[mm]	[in]	[mm]	[mm]	[mm]	[mm]	[mm]	[mm]
25	1	113	112	199	43	86	110
40	1 ½	113	112	210	52	104	140
50	2	113	112	221	62	124	200

1) Depending on the cable entry used: values up to +30 mm

Flange connections

Flange as per EN 1092-1: PN 16

Order code for "Process connection", option D3Z

Mass B: internal diameter depends on the liner → *Measuring tube specification*, 49

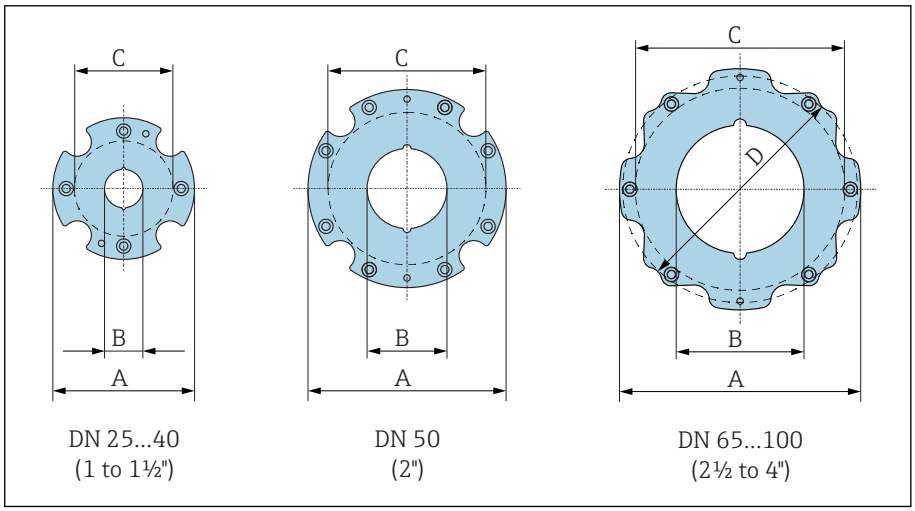

DN [mm]	A [mm]	B [mm]	C [1] [mm]
25	86	24	68
40	105	38	87
50	124	50	106
65	139	60	125
80	151	76	135
100	179	97	160

1) Max. Ø seals

Flange according to ASME B16.5: Class 150

Order code for "Process connection", option A1Z

Mass B: internal diameter depends on the liner → *Measuring tube specification*, 49

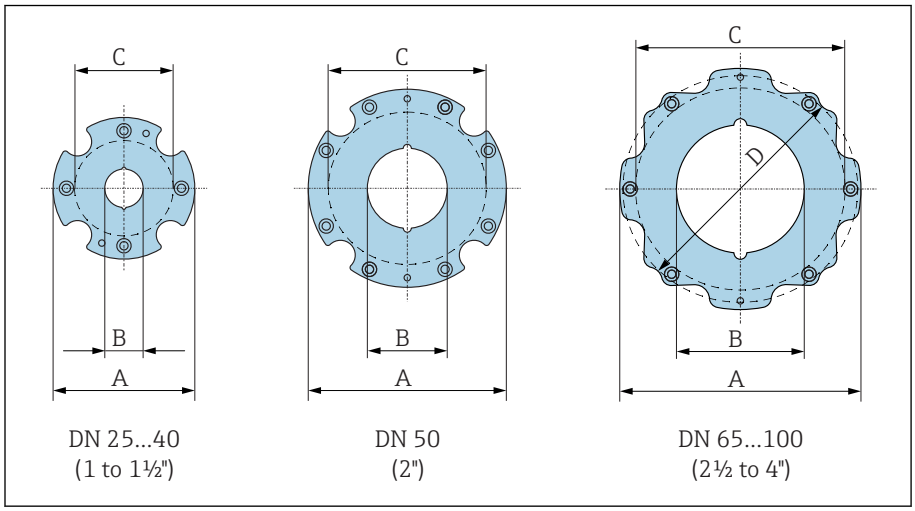

DN [in]	A [mm]	B [mm]	C [1)] [mm]	D [mm]
1	86	24	68	–
1 ½	105	38	87	–
2	124	50	106	–
3	151	76	135	138
4	179	97	160	–

1) Max. Ø seals

Flange JIS B2220: 10K

Order code for "Process connection", option N3Z

Mass B: internal diameter depends on the liner → *Measuring tube specification*, 49

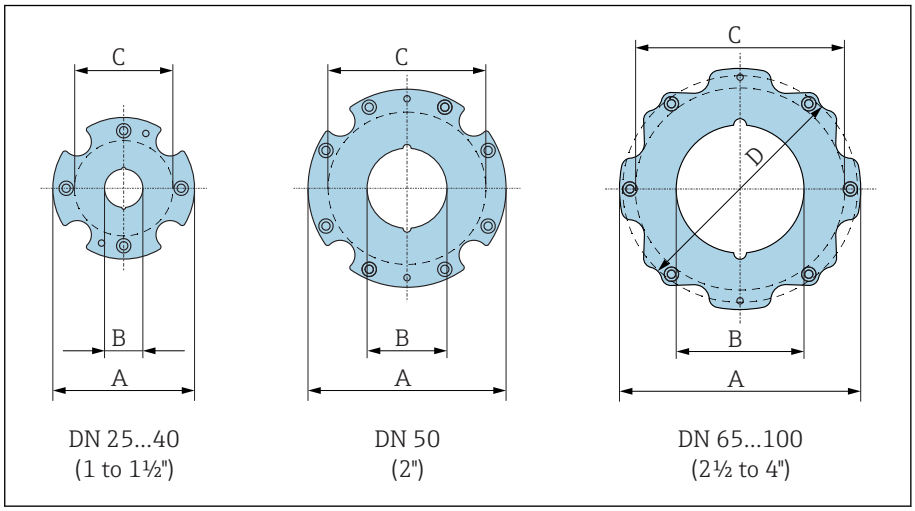

DN [mm]	A [mm]	B [mm]	C [1] [mm]
25	86	24	68
40	105	38	87
50	124	50	106
65	139	60	125
80	151	76	135
100	179	97	160

1) Max. Ø seals

Couplings

External thread: ISO 228

Order code for "Process connection", option I4S

Mass B: internal diameter depends on the liner → *Measuring tube specification*, 49

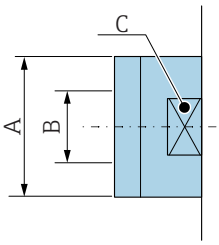

A0046008

DN [mm]	A [in]	B [mm]	C [mm]
25	G 1"	22	28
40	G 1 ½"	34.4	50
50	G 2"	43	60

External thread: ASME B1.20.1

Order code for "Process connection", option I5S

Mass B: internal diameter depends on the liner → *Measuring tube specification*, 49

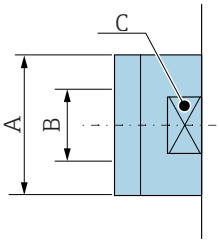

A0046008

DN [in]	A [in]	B [mm]	C [mm]
1	NPT 1"	22	28
1 ½	NPT 1 ½"	34.4	50
2	NPT 2"	43	60

Accessories

Protective cover

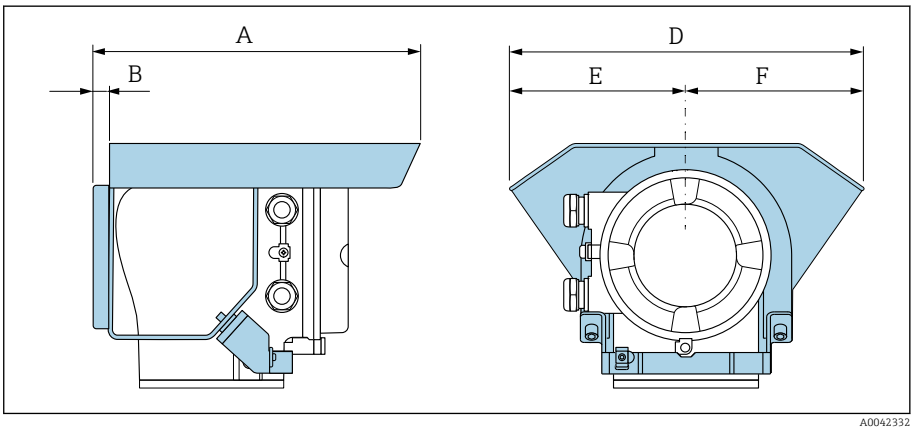

A0042332

A [mm]	B [mm]	D [mm]	E [mm]	F [mm]
257	12	280	140	140

Dimensions in US units

Compact version 66
Wafer version 66
Threaded version 67
Remote version 68
Transmitter remote version 68
Sensor remote version 69
Flange connections 71
Flange according to ASME B16.5: Class 150 71
Couplings 72
External thread: ASME B1.20.1 72
Accessories 73
Protective cover 73

Compact version

Wafer version

Order code for "Housing", option A "Compact, aluminum, coated"

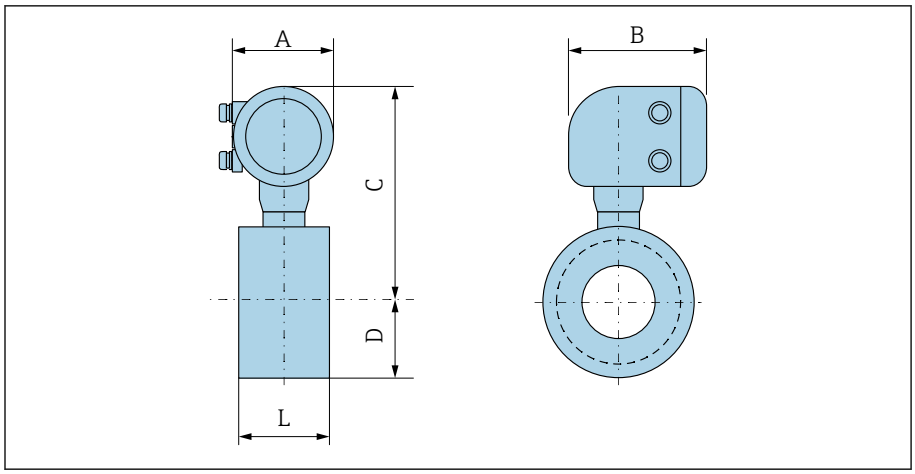

A0046005

DN [in]	A [1] [in]	B [in]	C [in]	D [in]	L [in]
1	5.47	7.01	10.2	1.69	2.17
1 ½	5.47	7.01	10.63	2.05	2.72
2	5.47	7.01	11.06	2.44	3.27
3	5.47	7.01	11.61	2.99	4.61
4	5.47	7.01	12.17	3.5	5.83

1) Depending on the cable entry used: values up to +1.18 in

Threaded version

Order code for "Housing", option A "Compact, aluminum, coated"

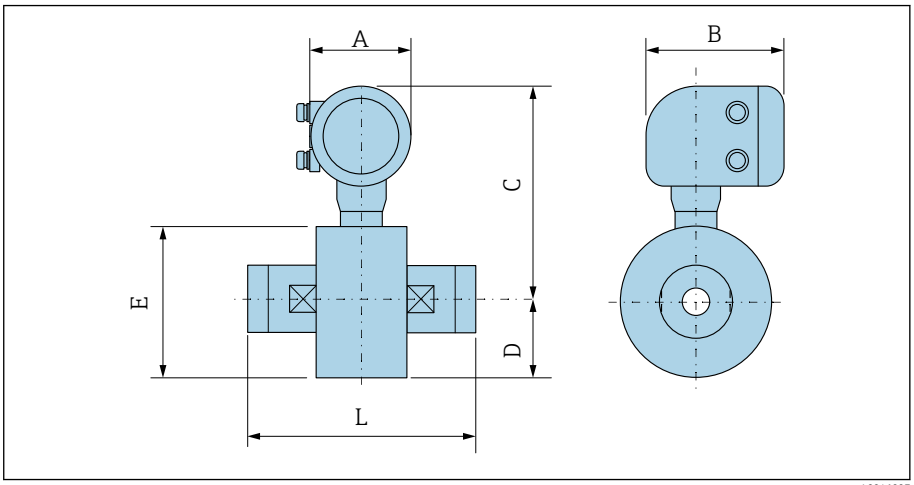

A0046007

DN [in]	A [1] [in]	B [in]	C [in]	D [in]	E [in]	L [in]
1	5.47	7.01	10.2	1.69	3.39	4.33
1 ½	5.47	7.01	10.63	2.05	4.09	5.51
2	5.47	7.01	11.06	2.44	4.88	7.87

1) Depending on the cable entry used: values up to +1.18 in

Remote version

Transmitter remote version

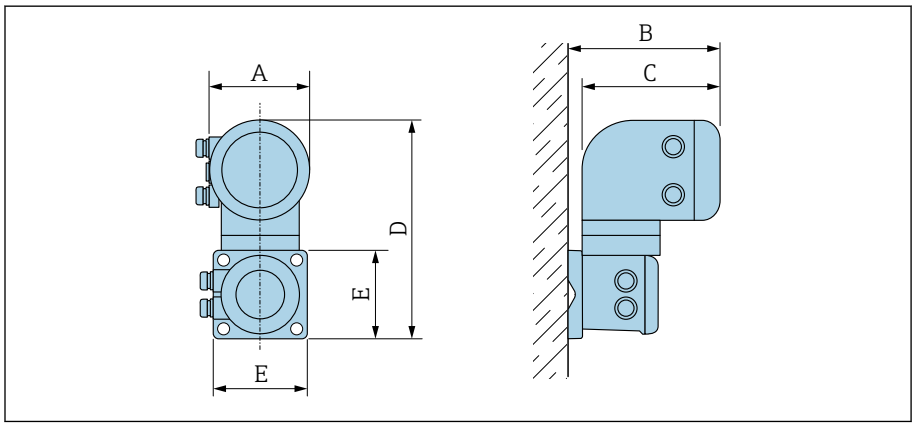

A0042715

Order code for "Housing"	A [1] [in]	B [in]	C [in]	D [in]	E [in]
Option N "Remote, polycarbonate"	5.2	7.36	6.77	12.09	5.12
Option P "Remote, aluminum, coated"	5.47	7.28	7.01	12.17	5.12

1) Depending on the cable entry used: values up to +1.18 in

Sensor remote version

Wafer version

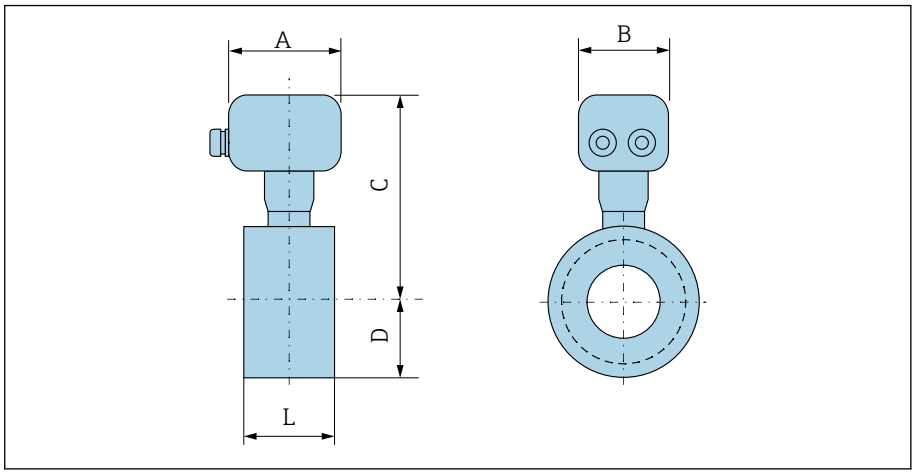

A0045564

DN [in]	A [1] [in]	B [in]	C [in]	D [in]	L [in]
1	4.45	4.41	7.83	1.69	2.17
1 ½	4.45	4.41	8.27	2.05	2.72
2	4.45	4.41	8.7	2.44	3.27
3	4.45	4.41	9.25	2.99	4.61
4	4.45	4.41	9.8	3.5	5.83

1) Depending on the cable entry used: values up to +1.18 in

Threaded connection

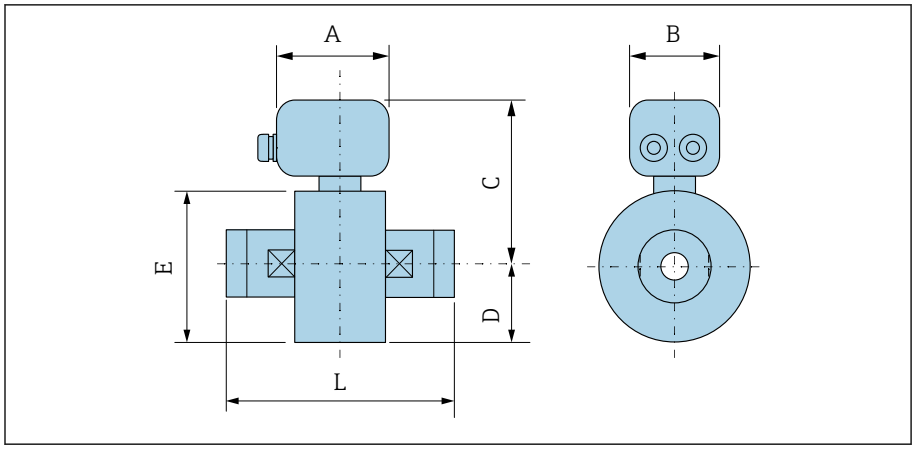

DN [in]	A [1] [in]	B [in]	C [in]	D [in]	E [in]	L [in]
1	4.45	4.41	7.83	1.69	3.39	4.33
1 ½	4.45	4.41	8.27	2.05	4.09	5.51
2	4.45	4.41	8.7	2.44	4.88	7.87

1) Depending on the cable entry used: values up to +1.18 in

Flange connections

Flange according to ASME B16.5: Class 150

Order code for "Process connection", option A1Z

Mass B: internal diameter depends on the liner → *Measuring tube specification*, 📄 49

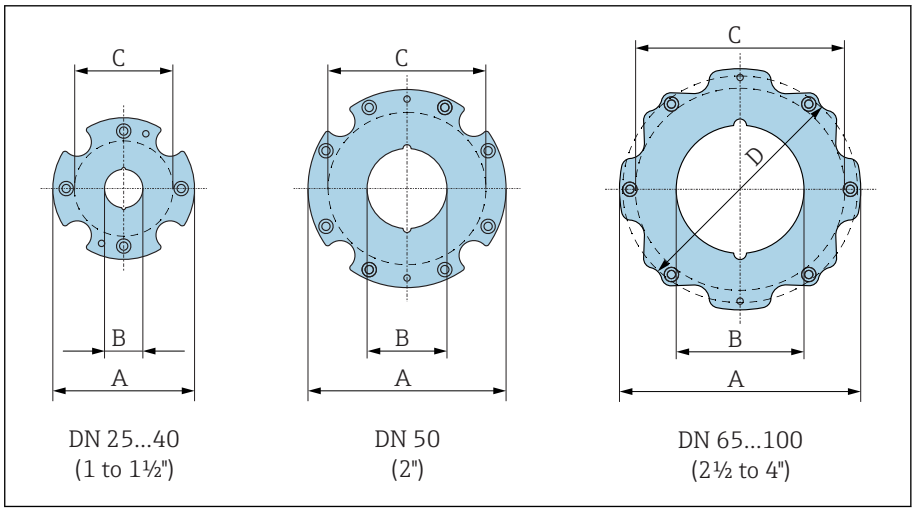

DN [in]	A [in]	B [in]	C [1] [in]	D [in]
1	3.39	0.94	2.68	–
1 ½	4.13	1.5	3.43	–
2	4.88	1.97	4.17	–
3	5.94	2.99	5.31	5.43
4	7.05	3.82	6.3	–

1) Max. Ø seals

Couplings

External thread: ASME B1.20.1

Order code for "Process connection", option I5S

Mass B: internal diameter depends on the liner → *Measuring tube specification*, 49

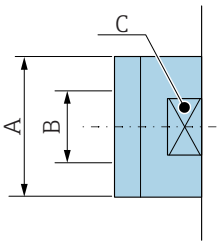

A0046008

DN [in]	A [in]	B [mm]	C [mm]
1	NPT 1"	22	28
1 ½	NPT 1 ½"	34.4	50
2	NPT 2"	43	60

Accessories

Protective cover

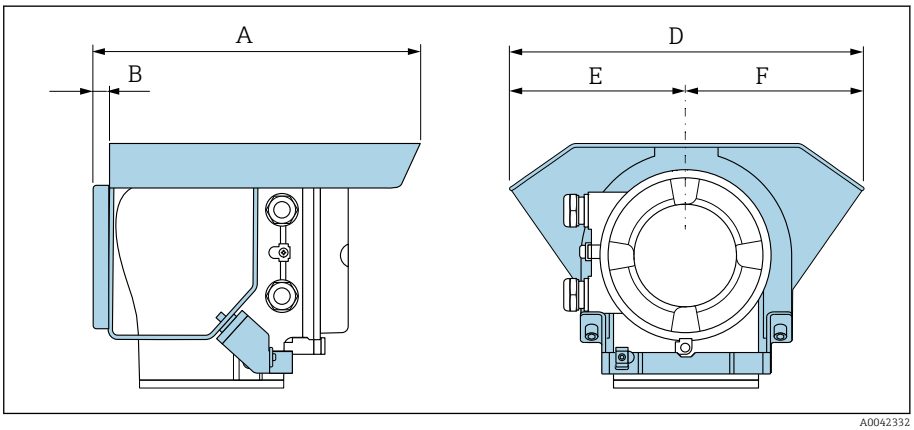

A0042332

A [in]	B [in]	D [in]	E [in]	F [in]
10.12	0.47	11.02	5.51	5.51

Local display

Operating concept 76
Operating options 76
Operating tools 77

Operating concept

Operation method	▪ Operation via local display with touch screen. ▪ Operation via SmartBlue App.
Menu structure	Operator-oriented menu structure for user-specific tasks: ▪ Diagnostics ▪ Application ▪ System ▪ Guidance ▪ Language
Commissioning	▪ Commissioning via a guided menu (**Commissioning** wizard). ▪ Menu guidance with interactive help function for individual parameters.
Reliable operation	▪ Operation in local language. ▪ Uniform operating philosophy in device and in the SmartBlue App. ▪ Write protection ▪ When electronics modules are replaced: configurations are transferred using the T-DAT Backup device memory. The device memory contains process data, device data and the event logbook. No reconfiguration is necessary.
Diagnostic behavior	Efficient diagnostic behavior increases measurement availability: ▪ Open troubleshooting measures via local display and SmartBlue App. ▪ Diverse simulation options. ▪ Logbook of events that have occurred.

Operating options

Local display	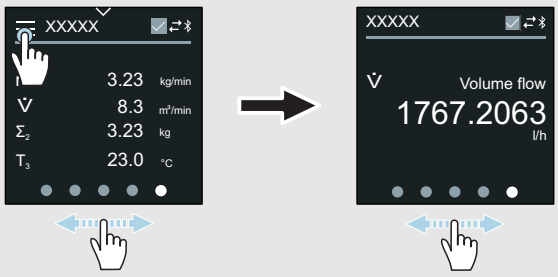 A0042957 Display elements: ▪ LCD touch screen ▪ Depends on the orientation, automatic alignment of local display. ▪ Configuration of display format for measured variables and status variables. Operating elements: ▪ Touch screen ▪ Local display can also be accessed in the hazardous area.
SmartBlue App	▪ The SmartBlue App allows the user to put devices into operation and operate them. ▪ Based on Bluetooth. ▪ No separate driver required. ▪ Available for mobile handheld terminals, tablets and smartphones. ▪ Suitable for convenient and secure access to devices in hard-to-reach locations or in hazardous areas. ▪ Can be used within a 20 m (65.6 ft) radius of the device. ▪ Encrypted and secure data transmission. ▪ No data loss during commissioning and maintenance. ▪ Diagnostic information and process information in real time.

Operating tools

Operating tools	Operating unit	Interface	Additional information
DeviceCare SFE100	▪ Notebook ▪ PC ▪ Tablet with Microsoft Windows system	▪ CDI service interface ▪ Fieldbus protocol	Innovation brochure IN01047S
FieldCare SFE500	▪ Notebook ▪ PC ▪ Tablet with Microsoft Windows system	▪ CDI service interface ▪ Fieldbus protocol	Operating Instructions BA00027S and BA00059S
SmartBlue App	▪ Devices with iOS: iOS9.0 or higher ▪ Devices with Android: Android 4.4 KitKat or higher	Bluetooth	Endress+HauserSmartBlue App: ▪ Google Playstore (Android) ▪ iTunes Apple Shop (iOS devices)
Device Xpert	Field Xpert SFX 100/350/370	HART fieldbus protocol	Operating Instructions BA01202S

Certificates and approvals

Non-Ex approval 80
Pressure Equipment Directive 80
Drinking water approval 80
HART certification 80
Radio approval 80
Other standards and guidelines 80

Non-Ex approval

- cCSAus
- EAC
- UK
- KC

Pressure Equipment Directive

- CRN
- PED Cat. II/III

Drinking water approval

- ACS
- KTW/W270
- NSF 61
- WRAS BS 6920

HART certification

The device is certified and registered by the FieldComm Group. The measuring system meets all the requirements of the following specifications:
- Certified according to HART 7
- The device can also be operated with certified devices of other manufacturers (interoperability).

Radio approval

The device has radio approvals.

Other standards and guidelines

- IEC/EN 60529
  Degrees of protection provided by enclosures (IP code)
- IEC/EN 60068-2-6
  Environmental influences: Test procedure - Test Fc: vibrate (sinusoidal)
- IEC/EN 60068-2-31
  Environmental influences: Test procedure - Test Ec: shocks due to rough handling, primarily for devices.
- IEC/EN 61010-1
  Safety requirements for electrical equipment for measurement, control and laboratory use - general requirements.
- CAN/CSA-C22.2 No. 61010-1-12
  Safety Requirements for Electrical Equipment for Measurement, Control and Laboratory Use - Part 1 General Requirements.
- IEC/EN 61326
  Emission in accordance with Class A requirements. Electromagnetic compatibility (EMC requirements)
- ANSI/ISA-61010-1 (82.02.01)
  Safety Requirements for Electrical Equipment for Measurement, Control and Laboratory Use - Part 1 General Requirements.
- NAMUR NE 21
  Electromagnetic compatibility (EMC) of industrial process and laboratory control equipment.
- NAMUR NE 32
  Data retention in the event of a power failure in field and control instruments with microprocessors.
- NAMUR NE 43
  Standardization of the signal level for the breakdown information of digital transmitters with analog output signal.
- NAMUR NE 53
  Software of field devices and signal-processing devices with digital electronics.
- NAMUR NE 105
  Specifications for integrating fieldbus devices in engineering tools for field devices.

- NAMUR NE 107
  Self-monitoring and diagnosis of field devices.
- NAMUR NE 131
  Requirements for field devices for standard applications.
- ETSI EN 300 328
  Guidelines for 2.4 GHz radio components
- EN 301489
  Electromagnetic compatibility and radio spectrum matters (ERM).

Application packages

Use 84
Heartbeat Verification + Monitoring 84

Use

Many different application packages are available to enhance the functionality of the device. Such packages might be needed to address safety aspects or specific application requirements.

The application packages can be ordered with the device or subsequently from Endress+Hauser. Detailed information on the relevant order code is available from your local Endress+Hauser sales organization or on the product page of the Endress+Hauser website: www.endress.com.

Heartbeat Verification + Monitoring

Heartbeat Verification

Availability depends on the product structure.

Meets the requirement for traceable verification to DIN ISO 9001:2008 Chapter 7.6 a) "Control of monitoring and measuring equipment":
- Functional testing in the installed state without interrupting the process.
- Traceable verification results on request, including a report.
- Simple testing process with local operation or other operating interfaces.
- Clear measuring point assessment (pass/fail) with high test coverage within the framework of manufacturer specifications.
- Extension of calibration intervals according to operator's risk assessment.

Heartbeat Monitoring

Availability depends on the product structure.

Heartbeat Monitoring continuously supplies data, which are characteristic of the measuring principle, to an external condition monitoring system for the purpose of preventive maintenance or process analysis. These data enable the operator to:
- Draw conclusions - using these data and other information - about the impact the process influences, e.g. corrosion, abrasion, formation of buildup, have on the measuring performance over time.
- Schedule servicing in time.
- Monitor the process quality or product quality, e.g. gas pockets.

Accessories

Device-specific accessories 86
Communication-specific accessories 87
Service-specific accessory 87
System components 88

Device-specific accessories

Transmitter

Accessories	Description	Order number
Proline 10 transmitter	Installation Instructions EA01350D	5XBBXX-*...*
Weather protection cover	Protects the device from weather exposure: Installation Instructions EA01351D	71502730
Connecting cable	Can be ordered with the device. The following cable lengths are available: order code for "Cable, sensor connection" ▪ 5 m (16 ft) ▪ 10 m (32 ft) ▪ 20 m (65 ft) ▪ User-configurable cable length (m or ft) Max. cable length: 200 m (660 ft)	DK5013-*...*

Sensor

Accessories	Description
Mounting kit for wafer version	Consists of: ▪ Mounting bolts ▪ Nuts with washers ▪ Flange seals ▪ Centering sleeves (if required for the flange)
Seal set	Consists of: 2 flange seals

Communication-specific accessories

Accessories	Description
Commubox FXA195 USB/HART modem	Intrinsically safe HART communication with FieldCare and FieldXpert Technical Information TI00404F
Commubox FXA291	Connects the Endress+Hauser devices with the CDI interface (= Endress+Hauser Common Data Interface) to the USB interface of a personal computer or laptop. Technical Information TI405C/07
HART Loop Converter HMX50	Is used to evaluate and convert dynamic HART process variables to analog current signals or limit values. ▪ Technical Information TI00429F ▪ Operating Instructions BA00371F
Fieldgate FXA42	Transmission of measured values from connected 4 to 20 mA analog and digital devices. ▪ Technical Information TI01297S ▪ Operating Instructions BA01778S ▪ Product page: www.endress.com/fxa42
Field Xpert SMT70	Tablet PC for the configuration of the device. Enables mobile Plant Asset Management to manage the devices with a digital communication interface. Suitable for Zone 2. ▪ Technical Information TI01342S ▪ Operating Instructions BA01709S ▪ Product page: www.endress.com/smt70
Field Xpert SMT77	Tablet PC for the configuration of the device. Enables mobile Plant Asset Management to manage the devices with a digital communication interface. Suitable for Zone 1. ▪ Technical Information TI01418S ▪ Operating Instructions BA01923S ▪ Product page: www.endress.com/smt77

Service-specific accessory

Accessories	Description	Order number
Applicator	Software for selecting and sizing Endress+Hauser devices.	https://portal.endress.com/webapp/applicator
W@M Life Cycle Management	▪ Information platform with software applications and services ▪ Supports the entire life cycle of the facility.	www.endress.com/lifecyclemanagement
FieldCare	FDT-based plant asset management software from Endress+Hauser. Management and configuration of Endress+Hauser devices. Operating Instructions BA00027S and BA00059S	▪ Device driver: www.endress.com → Download Area ▪ CD-ROM (contact Endress+Hauser) ▪ DVD (contact Endress+Hauser)
DeviceCare	Software for connecting and configuring Endress+Hauser devices. Innovation brochure IN01047S	▪ Device driver: www.endress.com → Download Area ▪ CD-ROM (contact Endress+Hauser) ▪ DVD (contact Endress+Hauser)

System components

Accessories	Description
Memograph M	Graphic data manager: ▪ Record measured values ▪ Monitor limit values ▪ Analyze measuring points ▪ Technical Information TI00133R ▪ Operating Instructions BA00247R
iTEMP	Temperature transmitter: ▪ Measure the absolute pressure and gauge pressure of gases, vapors and liquids ▪ Read the medium temperature "Fields of Activity" document FA00006T



www.addresses.endress.com

Endress+Hauser

People for Process Automation