

CONNECT AND PROTECT

Novastar

01/2023

nVent
SCHROFF

Cabinets – Novastar

OVERVIEW

MAIN KATALOG

Cabinets 1

Wall mounted cases 2

Accessories for cabinets and wall mounted cases . . 3

Climate control . . 4

Electronics cases 5

Subracks/ 19" chassis 6

Front panels, plug-in units 7

Systems 8

Power supply units 9

Backplanes 10

Connectors, front panel component system 11

Appendix 12



07011036

LIGHT - SLIM - ROBUST

The base frame, made in lightweight aluminium, is the basis for your individual NOVASTAR. And now you decide: small or large, in standard depth or with extended space for cabling and heat dissipation, whether as a stand-alone solution or stacked one on top of another and bolted together.

The NOVASTAR platform concept leaves no wish neglected. And regardless of how you put your NOVASTAR together, the internal dimensions remain consistently compatible with 19" technology. Unwanted spaces in either height or width are now a thing of the past.

With a cabinet width of only 553 mm, NOVASTAR is the slimmest of all 19" cabinets. It has a slender, filigreed look, almost like a piece of designer furniture. This impression is further reinforced by the different finishes of the frame and cover trim and the plain, modern full-glass doors.

Because of this, NOVASTAR is not only used in offices and laboratories but also in sound and TV studios. And indeed as a collector's item in the occasional home!



07011023

Simple fitting of side panel without tools

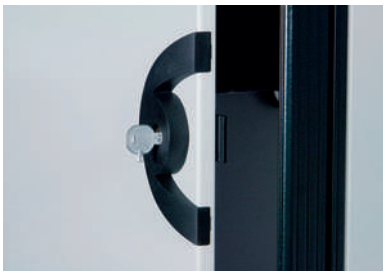

07011025

Door with 180° opening angle thanks to new hinge concept; can be mounted left or right

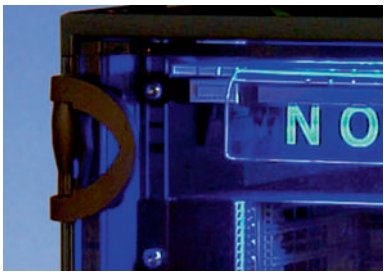

07011020



07011028

Extensive selection of castors



07011022



07011007

Heavy-Duty frame with lateral groove for mounting e.g. of carrier arm systems

Cabinets – Novastar

OVERVIEW

Overview **1.240**

Dimensions **1.243**

NOVASTAR

19" cabinet with smoke tintend glass door and rear panel **1.246**

Selectable combination of 19" cabinet, door and rear panel **1.247**

Accessories

Doors and cable ducting systems **1.247**

Rear panels and cable ducting systems **1.251**

Base plates 1.252

Castors **1.253**

Bases/plinths **1.254**

19" panel/slide mounts 1.255

Depth members .. 1.255

Slide rails **1.256**

Shelves **1.258**

Support arm system **1.260**

Slide nut **1.260**

THE INNOVATIVE 19" ELECTRONICS CABINET

- **Type of protection up to IP 40**
- **Bolted, die-cast frame with Al extrusions**
- **Cabinet width only 553 mm**
- **Static load-carrying capacity up to 400 kg**
- **Colours: RAL 7021 or colour combination RAL 7021/ RAL 7035**

19" cabinet,
with glass door (smoke grey) and rear panel



07011010

- Height of Slim-Line 12 ... 20 U (load-carrying capacity 200 kg)
- Height of Heavy-Duty 38 ... 43 U (load-carrying capacity 400 kg)
- Depth 600, 800 mm

19" cabinet,
door and rear panel combination freely selectable



07011013

- Height of Slim-Line 9 ... 25 U (load-carrying capacity 200 kg)
- Height of Heavy-Duty 34 ... 47 U (load-carrying capacity 400 kg)
- Depth 500, 600, 800 mm
- Door and rear panel can be equipped individually

STANDARDS/APPROVALS

- External and internal dimensions in accordance with IEC 60297-3-100
- Type of protection IP 40 in accordance with IE 60529
- Earth connections in accordance with DIN EN 50178 / VDE 0160

SERVICEPLUS

e.g. individual configuration and assembly
e.g. modifications (cut-outs, special colours)
e.g. custom solutions (cut-outs)
e.g. variants of uprights (Slim-Line, Heavy-Duty)
e.g. custom solutions (special sizes)

Cabinets – Novastar

NOVASTAR CONFIGURATOR



07017001

With the Schroff brand, nVent offers a wide range of electronics cabinets and other electronic protection products. Instead of restricting the range to a few standard products, Schroff offers bespoke solutions which fulfill the specific requirements of the application. Schroff configurations are easy-to-operate tools which make it possible to configure and modify products quickly and easily: Design Your Standard.
The Novastar configurator is a web-based tool with an intuitive graphical user interface and multilingual menus in English, German, and French. These make configuring Novastar cabinets quick and easy.

INDIVIDUAL SOLUTIONS ARE JUST A CLICK AWAY

- Configurations can start with the frame or by modifying ready-configured or previously configured Novastar cabinets
- Large selection of dimensions, frame types, door types, side panels, top covers, and base plates
- Accessories such as shelves and slide rails can be mounted
- Selection of special cabinet colors
- Cutouts incorporated for switches and connectors or logos, text, and other graphics printed

REAL-TIME 3D CAD MODEL GENERATION

- Real-time display of configured cabinets with all modifications in several views and adjustable transparency
- The configuration adjusts in real time and offers different mounting options
- Real-time generation of 3D CAD models and/or 2D native CAD files in more than 30 CAD file formats for downloading or for immediate further processing and integration into the user's CAD software
- Real-time generation of a bill of materials with all components of the configured cabinet
- Quotes issued quickly for customized Novastar cabinets and an inquiry is simply a click away

EASE OF USE

- Graphical user interface with drag-and-drop functionality and immediate display of the selected configuration
- Available components are listed as illustrations in the menu for quick access and easy identification
- Intelligent configurator logic indicates where components can be installed, ensures compatibility and shows relevant optional components
- The "U" height scale helps you to position the components correctly
- Components identified with mouse-over functionality
- Components exchanged using simple drag-and-drop functionality or deleted in the bill of materials
- Non-assembled accessories can be added to the bill of materials
- No need to download any programs or apps, or install any software or plug-ins No registration required
- The optional, free user account registration provides access to additional functions

Cabinets – Novastar

DIMENSION DRAWINGS SLIM-LINE FRAMES

Frame

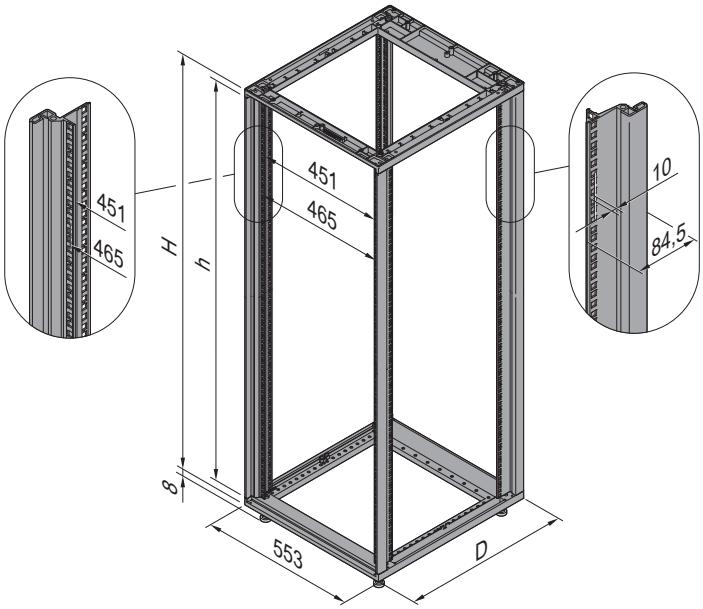

07011094

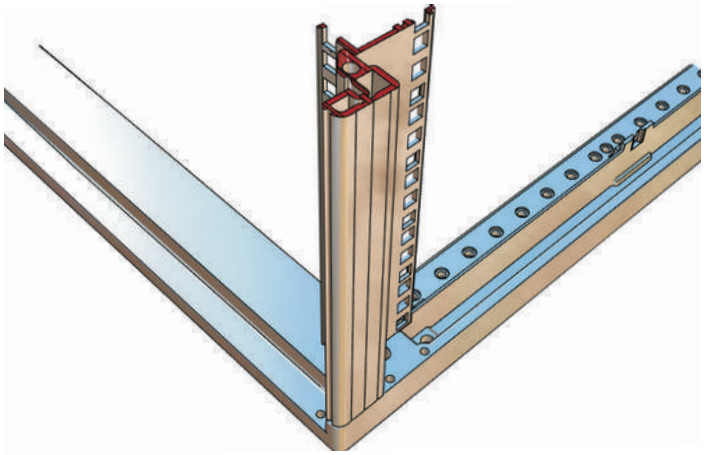

07011093

Frame (top view)

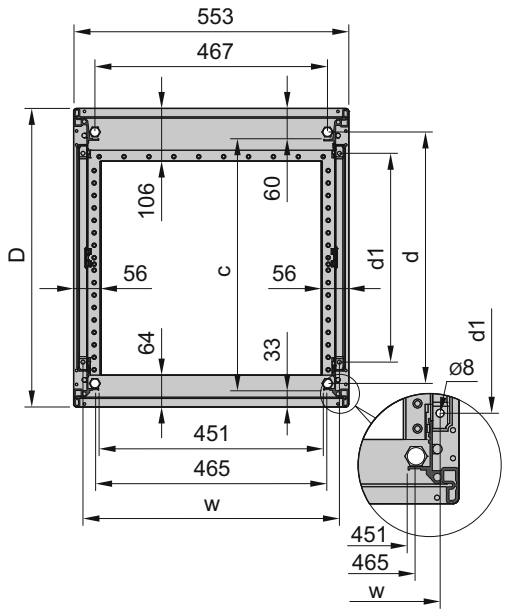

07011098

- Lightweight aluminium die-cast frame and lightweight vertical profile
- Static load-carrying capacity 200 kg, tested in accordance with IEC 61587-1

Frame dimensions

Cabinet height U	H mm	h mm
6	357	268
9	456	401
12	589	535
16	767	713
20	945	890
25	1167	1112
34	1567	1513
38	1745	1690
43	1967	1913
47	2145	2090
Foot height 8 mm		

Upright at front/rear

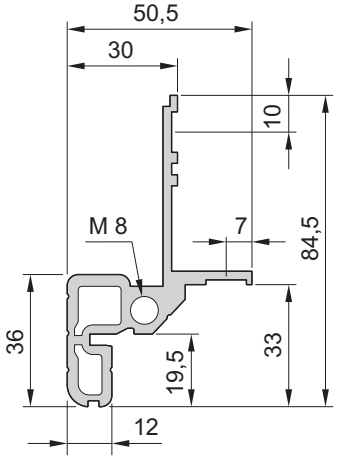

07011096

Upright at rear

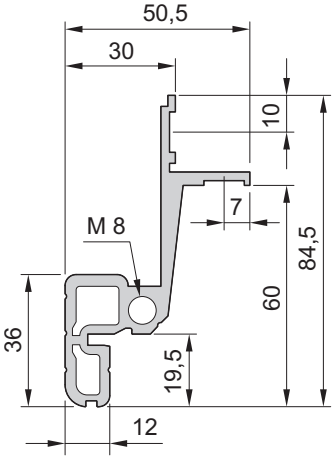

07011097

Frame dimensions

Cabinet depth	Adjustable feet, castors, lifting eye, top cover fixing	19" to 19" plane	Floor mounting	
D mm	d mm	c mm	d1 mm	w mm
500	405	407	319	515
600	505	507	419	515
800	705	707	619	515
900	805	807	719	515
1000	905	907	819	515

Part number in bold face type: ready for shipping within 2 working days
Part number in normal type: ready for shipping within 10 working days

Cabinets – Novastar

DIMENSION DRAWINGS HEAVY-DUTY FRAMES

Frame

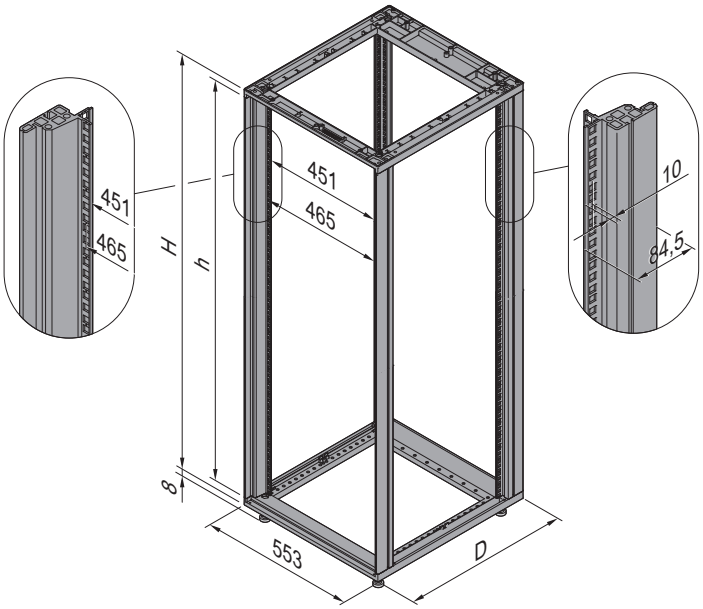

07011095

19" upright

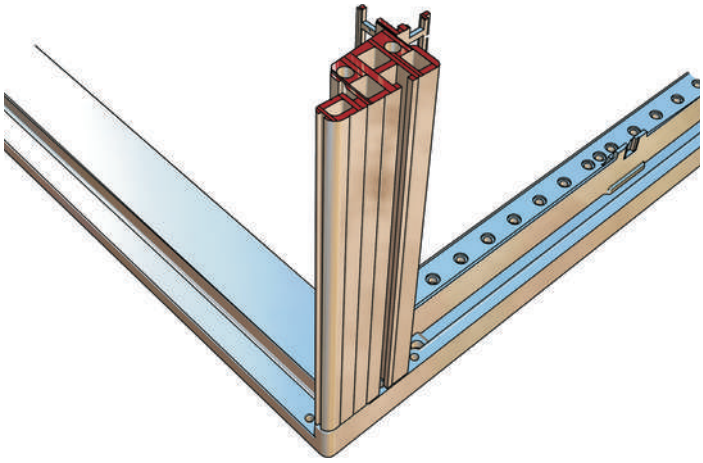

07011092

Frame (top view)

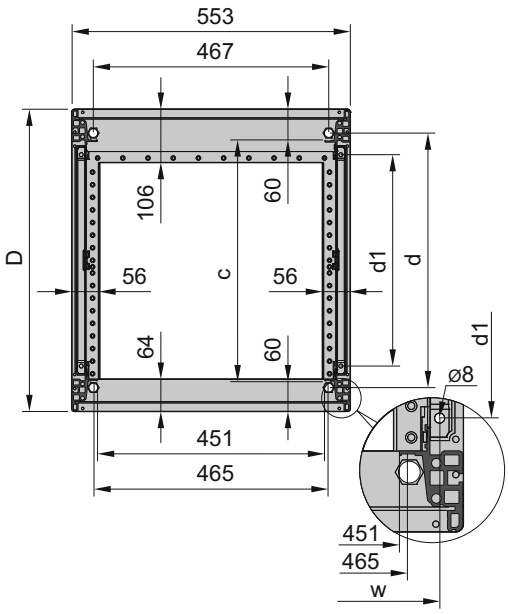

07011100

- Light aluminium die-cast frame and robust vertical profile
- Static load-carrying capacity 400 kg, tested in accordance with IEC 61587-1
- Lateral groove for mounting accessories

Frame dimensions

Cabinet height	H	h
U	mm	mm
12	589	535
16	767	713
20	945	890
25	1167	1112
34	1567	1513
38	1745	1690
43	1967	1913
47	2145	2090
Foot height 8 mm		

19" front / rear upright

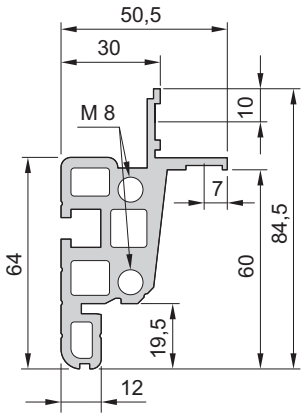

07011099

Frame dimensions

Cabinet depth	Adjustable feet, castors, lifting eye, top cover fixing	19" to 19" plane	Floor mounting	
D	d	c	d1	w
mm	mm	mm	mm	mm
500	405	380	319	515
600	505	480	419	515
800	705	680	619	515
900	805	780	719	515
1000	905	880	819	515

Cabinets – Novastar

DIMENSIONAL DRAWINGS HEAVY-DUTY UNIVERSAL FRAMES

Frame

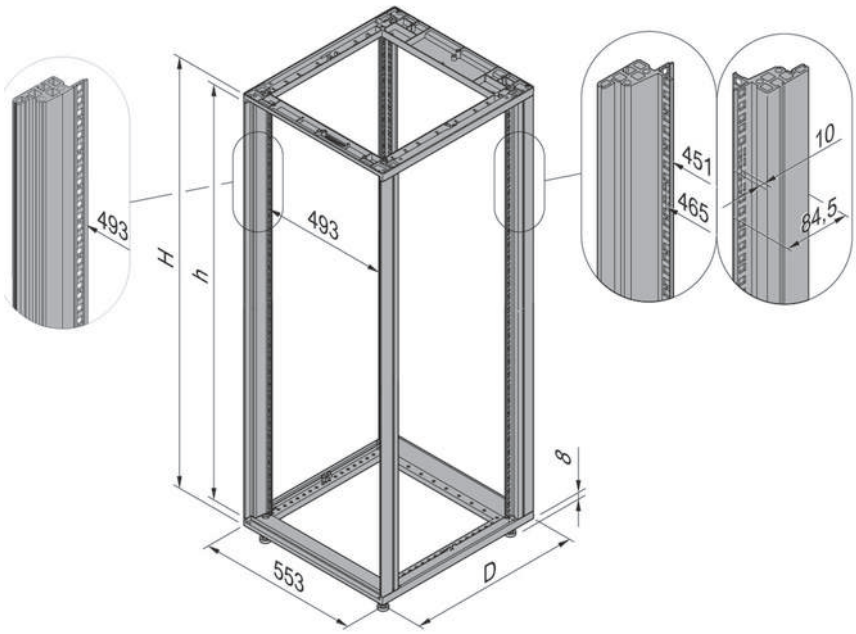

07016081

Universal upright

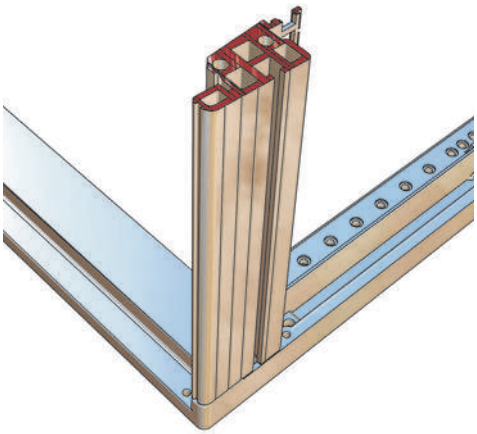

07016002

Frame (top view)

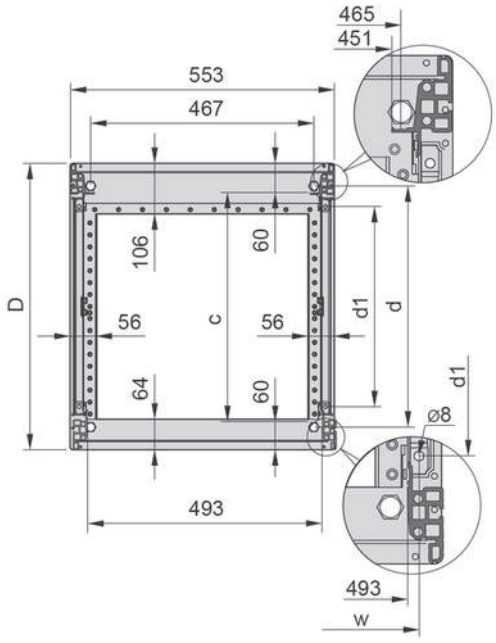

07016082

- Light aluminum die-cast frame and robust vertical profile
- Static load-carrying capacity 400 kg, tested to IEC 61587-1
- Lateral groove for mounting built-on accessories

Rack dimensions

Cabinet height U	H mm	H mm
12	589	535
16	767	713
20	945	890
25	1167	1112
34	1567	1513
38	1745	1690
43	1967	1913
47	2145	2090
Foot height 8 mm		

Universal front upright / 19" rear upright

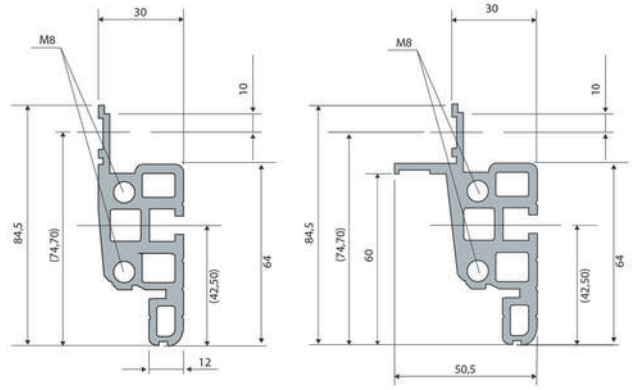

07016083

Rack dimensions

Cabinet depth D mm	Adjustable feet, casters, lift lug, top cover fixing d mm	19" to 19" plane c mm	Base mounting d1 mm	 w mm
500	405	380	319	515
600	505	480	419	515
800	705	680	619	515
900	805	780	719	515
1000	905	880	819	515

Part number in bold face type: ready for shipping within 2 working days
Part number in normal type: ready for shipping within 10 working days

19" CABINET WITH GLASS DOOR (SMOKE GREY) AND REAR PANEL



07011010

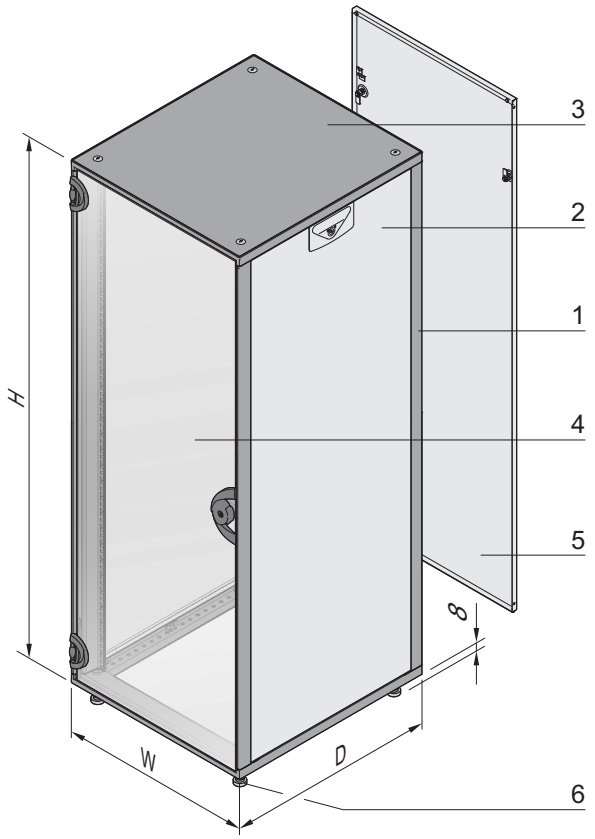

07011050

Spacing to 19" plane:
front 33 mm, rear 60 mm;
60 mm

Slim-Line:
Heavy-Duty: front and rear

- All uprights (front and rear) with 19" cut-outs
- Flush cladding parts
- Type of protection IP 20
- 2 cabinet depths (600 mm, 800 mm), cabinet width 553 mm
- Static load-carrying capacity
  - Slim-Line 200 kg (12, 16, 20 U)
  - Heavy-Duty 400 kg (38, 43 U)
- 2 colours
  - RAL 7021 (black grey) throughout
  - Colour combination: side panels, rear panel RAL 7035 (light grey); frame, top cover RAL 7021 (black grey)

DELIVERY COMPRISES (assembled)

Item	Qty	Description
1	1	Frame, uprights Al extrusion with 19" cut-outs, Al die-cast frame, RAL 7021
2	2	Side panel, St, 1 mm; light grey (RAL 7035) or black grey (RAL 7021), see Order information; twist-locking catch (Torx T30)
3	1	Flush top cover, St, 1 mm, RAL 7021
4	1	Glazed door, single pane safety glass (ESG) 6 mm, smoke grey, with DIN cylinder safety lock and 2 keys (2233x)
5	1	Rear panel, St, 1 mm, light grey (RAL 7035) or black grey (RAL 7021), see Order information
6	4	Foot
7	1	GND/earthing kit

ORDER INFORMATION

Usable height	Height H	Width W	Depth D	Colour RAL 7021	ColourRAL 7035/ RAL 7021
U	mm	mm	mm	Part no.	Part no.
Slim-Line					
12	589	553	600	15230-019	**16230-019**
16	767	553	600	15230-020	**16230-020**
20	945	553	600	15230-021	**16230-021**
Heavy-Duty					
38	1745	553	600	15230-022	**16230-022**
38	1745	553	800	15230-023	**16230-023**
43	1967	553	600	15230-024	**16230-024**
43	1967	553	800	15230-025	**16230-025**
Accessories					
Lifting eye for flush cover M12 thread, application and load to DIN 582 PU 4 pieces					**27230-066**

NOTE

- Please order base plate, base/plinth, slide rails and shelves separately, see from page 1.254
- Castors see page 1.253
- Other accessories/components see ServicePLUS, from page 1.261
- Dimension drawings see from page 1.243

Cabinets – Novastar

19" CABINET, DOOR AND REAR PANEL COMBINATION FREELY SELECTABLE



07011013

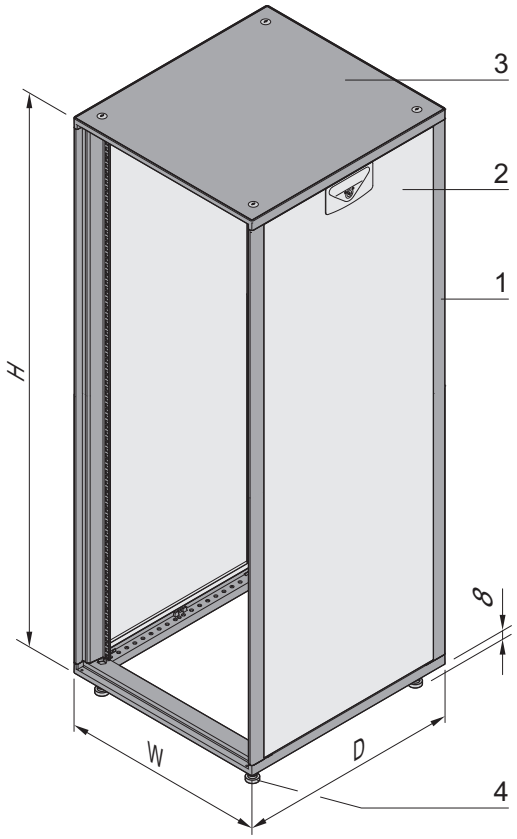

07011051

Spacing to 19" plane:
front 33 mm, rear 60 mm;
60 mm

Slim-Line:
Heavy-Duty: front and rear

- All uprights (front and rear) with 19" cut-outs
- Flush cladding parts
- Type of protection IP 20
- 3 cabinet depths (500, 600 and 800 mm), cabinet width 553 mm
- Static load-carrying capacity
  - Slim-Line 200 kg (9 U to 25 U)
  - Heavy-Duty 400 kg (34 U to 47 U)
- 2 colours
  - RAL 7021 (black grey) throughout
  - Colour combination: side panels RAL 7035 (light grey); frame, top cover RAL 7021 (black grey)

DELIVERY COMPRISES (assembled)

Item	Qty	Description
1	1	Frame, uprights Al extrusion with 19" cut-outs, Al die-cast frame, RAL 7021
2	2	Side panel, St, 1 mm; light grey (RAL 7035) or black grey (RAL 7021), see Order information; twist-locking catch (Torx T30)
3	1	Flush top cover, St, 1 mm, RAL 7021
4	4	Foot
5	1	GND/earthing kit

ORDER INFORMATION

Usable height	Height H	Width W	Depth D	Colour RAL 7021	ColourRAL 7035/RAL 7021
U	mm	mm	mm	Part no.	Part no.
Slim-Line					
9	456	553	600	15230-001	**16230-001**
12	589	553	500	15230-002	**16230-002**
12	589	553	600	15230-003	**16230-003**
16	767	553	500	15230-004	**16230-004**
16	767	553	600	15230-005	**16230-005**
20	945	553	500	15230-006	**16230-006**
20	945	553	600	15230-007	**16230-007**
20	945	553	800	15230-008	**16230-008**
25	1167	553	600	15230-009	**16230-009**
25	1167	553	800	15230-010	**16230-010**
Heavy-Duty					
34	1567	553	600	15230-011	**16230-011**
34	1567	553	800	15230-012	**16230-012**
38	1745	553	600	15230-013	**16230-013**
38	1745	553	800	15230-014	**16230-014**
43	1967	553	600	15230-015	**16230-015**
43	1967	553	800	15230-016	**16230-016**
47	2145	553	600	15230-017	**16230-017**
47	2145	553	800	15230-018	**16230-018**
Accessories					
Lifting eye for flush cover M12 thread, application and load to DIN 582 PU 4 pieces					**27230-066**

- Please order doors, rear panel, base plate, base/plinth, slide rails and shelves separately, see from page 1.248
- Castors see page 1.253
- Other accessories/components see ServicePLUS, from page 1.261
- Dimension drawings see from page 1.243

Part number in bold face type: ready for despatch within 2 working days
Part number in normal type: ready for despatch within 10 working days

GLASS DOOR (SMOKE GREY)

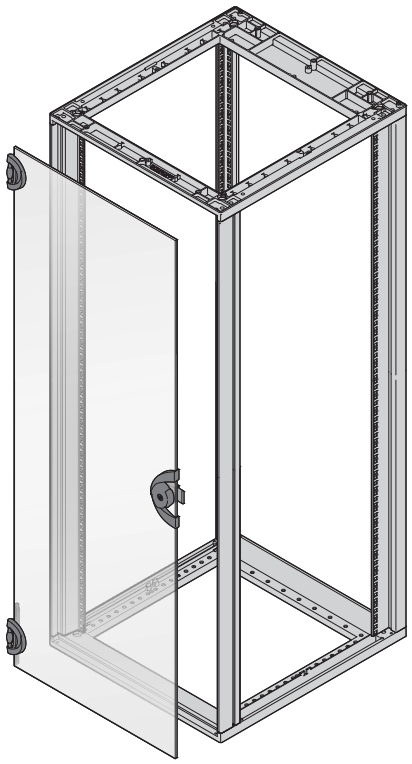

07011059

- Can be assembled at front and rear
- Opening angle 180°

DELIVERY COMPRISES

Item	Qty	Description
1	1	Glass door, single pane safety glass (ESG) 6 mm, smoke grey; safety lock with DIN cylinder and 1 key (2233x); hinges, plastic, black
2	1	Assembly kit

ORDER INFORMATION

For cabinet height U	Height mm	Part no.
9	422	**27230-002**
12	555	**27230-003**
16	733	**27230-004**
20	911	**27230-005**
25	1133	**27230-006**
29	1345	27230-028
34	1534	**27230-007**
38	1711	**27230-008**
43	1933	**27230-009**
47	2111	27230-010

GLAZED ACRYLIC GLASS DOOR

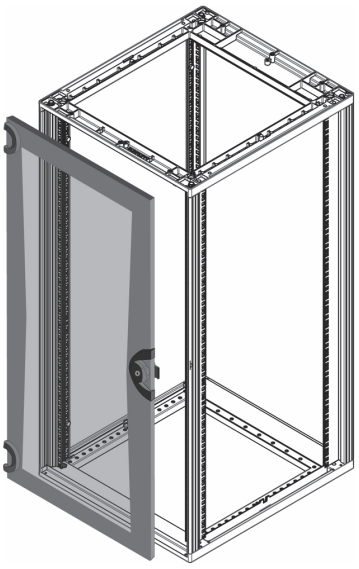

07016054

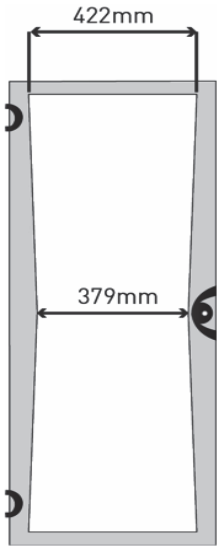

07016053

- Mounting front or rear
- Opening angle 180°
- Lock with key
- Frame color black gray (RAL 7021) or light gray (RAL 7035)

DELIVERY INCLUDES

Item	Qty.	Description
1	1	Door frame, St, 1.5 mm
2	1	Acrylic sheet, 2 mm, clear
3	1	Lock (2233x) with 1 key
4	1	Fixing materials kit including GND

ORDER INFORMATION

For cabinet height U	For cabinet height mm	Colour RAL 7021 Part no.	ColourRAL 7035 Part no.
6	322	25230-092	26230-092
9	456	25230-093	26230-093
12	589	25230-094	26230-094
16	767	25230-095	26230-095
20	945	25230-096	26230-096
25	1167	25230-097	26230-097
29	1345	25230-102	26230-102
34	1567	25230-098	26230-098
38	1745	25230-099	26230-099
43	1967	25230-100	26230-100
47	2145	25230-101	26230-101
Accessories			
Spare key 1 piece			**60127-018**

STEEL DOOR

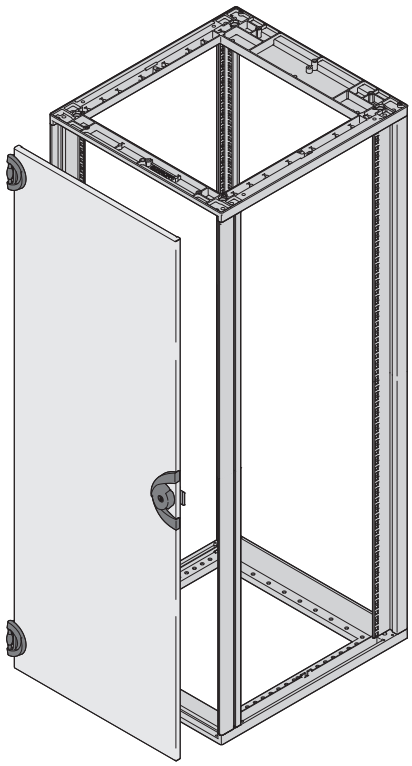

- Can be assembled at front and rear
- Opening angle 180°
- Colour black grey (RAL 7021) or light grey (RAL 7035)

DELIVERY COMPRISES

Item	Qty	Description
1	1	Steel door, St, 1.5 mm; safety lock with DIN cylinder and 1 key (2233x); hinges, plastic, black
2	1	Fixing material kit and GND/earthing kit

ORDER INFORMATION

For cabinet height	Height	Colour **RAL 7021**	ColourRAL 7035
U	mm	Part no.	Part no.
9	422	25230-021	**26230-021**
12	555	25230-022	**26230-022**
16	733	25230-023	**26230-023**
20	911	25230-024	**26230-024**
25	1133	25230-025	**26230-025**
29	1345	25230-030	**26230-030**
34	1534	25230-026	**26230-026**
38	1711	25230-027	**26230-027**
43	1933	25230-028	26230-028
47	2111	25230-029	26230-029
Accessories			
Spare key 1 piece			**60127-018**

PERFORATED DOOR

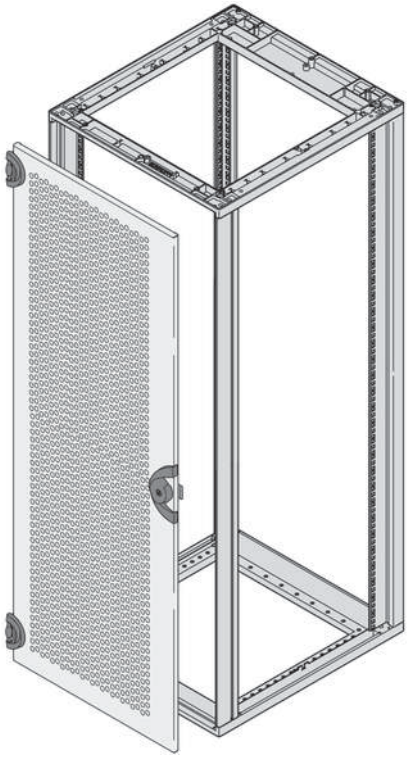

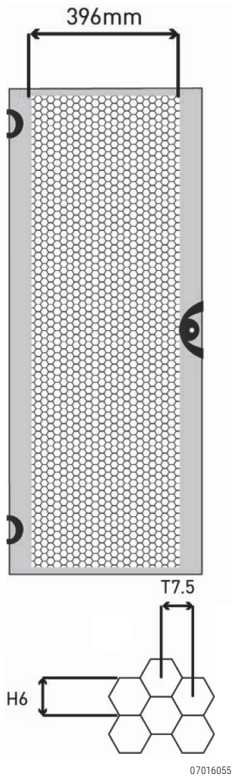

- Can be mounted at front and rear
- Perforated (60 % ventilation opening)
- Opening angle 180°
- Lock with key (2233X)
- Colors RAL 7035 and RAL 7021

DELIVERY INCLUDES

Item	Qty.	Description
1	1	Door, perforated, St, 1.5 mm, width 553 mm, 60 % ventilation opening, see order information for color
2	2	Hinge, 180° opening angle
3	1	Lock with single key (2233X)
2	1	Earthing (GND) kit

ORDER INFORMATION

For cabinet height	Height	Colour **RAL 7021**	ColourRAL 7035
U	mm	Part no.	Part no.
6	288.4	25230-081	26230-081
9	421.75	25230-082	26230-082
12	555.1	25230-083	26230-083
16	732.9	25230-084	26230-084
20	910.7	25230-085	26230-085
25	1132.95	25230-086	26230-086
29	1310.75	25230-091	26230-091
34	1533	25230-087	26230-087
38	1710.8	25230-088	26230-088
43	1933.05	25230-089	26230-089
47	2110.85	25230-090	26230-090
Accessories			
Spare key 1 piece			**60127-018**

Part number in bold face type: ready for despatch within 2 working days
Part number in normal type: ready for despatch within 10 working days

CABLE DUCTING COMBINATION FOR STEEL DOOR

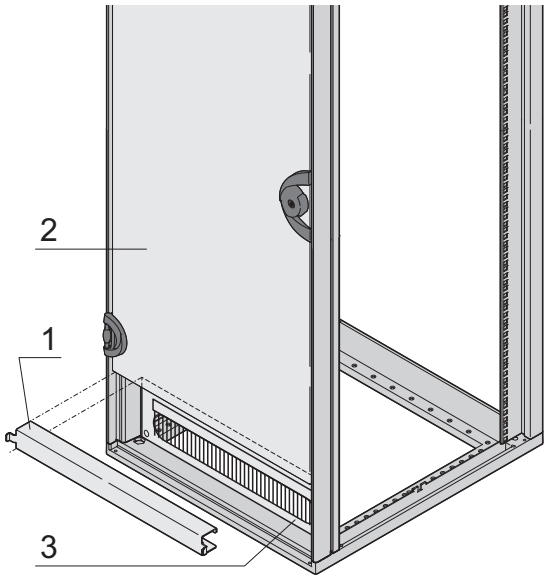

07011061

- For a cable ducting combination a steel door, a door hinge bracket and a frame for cable ducting are required
- Cable ducting can be at top or bottom
- Frame with brush strip for cable ducting is either 3 U or 4 U, depending on cabinet/door height

DELIVERY COMPRISES

Item	Qty	Description
1	1	Door hinge bracket, St, 2 mm, RAL 7021 requires 1 U fitting space, mounts above or below the steel door
2	1	Steel door, St, 1.5 mm, lock (2233x) with 1 key, opening angle 180°, GND/earthing
3	1	Frame for cable ducting, St, 2.5 mm, with black brush strip, 3 U (for cabinet heights 16, 20, 38, 47 U) 4 U (for cabinet heights 25, 34, 43 U)

ORDER INFORMATION

For cabinet height	Steel door		Steel door Perforated		Glass door	Door hinge bracket for doors			
	RAL 7035	RAL 7021	RAL 7035	RAL 7021	smoke grey	Slim-Line front 33 mm	Slim-Line rear 60 mm	Heavy-Duty front/rear 60 mm	19" plane for universal upright
	St, 1.5 mm, lock (2233x) with 1 key , opening angle 180, incl. GND/ earthing		St, 1.5 mm, perforated, opening angle 180°, lock with key (2233X), incl. grounding		opening angle 180°, lock with key, glass type: ESG 6 mm, EN 12150	door hinge bracket, St, 2 mm, RAL 7021; mounts above or below the door; requires 1 U assembly space		door hinge bracket, St, 2 mm, RAL 7021; mounts above or below the door; requires 1 U assembly space	St, 2 mm, RAL 7021 1) Height 3 U 2) Height 4 U
U									
16	**26230-022**	25230-022	26230-084	25230-084	**27230-004**	**27230-060**	**27230-061**	27230-098	1) 27230-162
20	**26230-023**	25230-023	26230-085	25230-085	**27230-005**	**27230-060**	**27230-061**	27230-098	1) 27230-162
25	**26230-024**	25230-024	26230-086	25230-086	**27230-006**	**27230-060**	**27230-061**	27230-098	2) 27230-163
34	**26230-030**	25230-030	26230-087	25230-087	**27230-007**	**27230-060**	**27230-061**	27230-098	2) 27230-163
38	**26230-026**	25230-026	26230-088	25230-088	**27230-008**	**27230-060**	**27230-061**	27230-098	1) 27230-162
43	**26230-027**	25230-027	26230-089	25230-089	**27230-009**	**27230-060**	**27230-061**	27230-098	2) 27230-163
47	26230-028	25230-028	26230-090	25230-090	27230-010	**27230-060**	**27230-061**	27230-098	1) 27230-162

For cabinet height	Cable ducting		
	RAL 7035 Screw fixed	RAL 7021 Screw fixed	RAL 7021 clipped
	St, 2.5 mm, with black brush strip 1) Height 3 U 2) Height 4 U		
U			
16	1) **20118-391**	1) **20118-796**	1) 27230-160
20	1) **20118-391**	1) **20118-796**	1) 27230-160
25	2) **20118-390**	2) **20118-797**	2) 27230-161
34	2) **20118-390**	2) **20118-797**	2) 27230-161
38	1) **20118-391**	1) **20118-796**	1) 27230-160
43	2) **20118-390**	2) **20118-797**	2) 27230-161
47	1) **20118-391**	1) **20118-796**	1) 27230-160

REAR PANEL

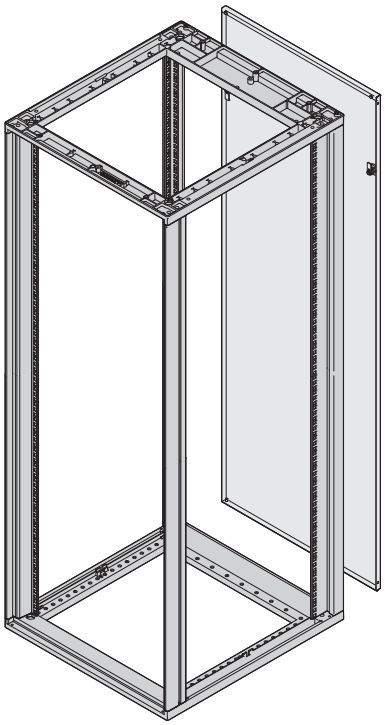

07011057

- Twist-locking catch (Torx T30, with 1/4 turn)
- Rear panel: colour black grey (RAL 7021) or light grey (RAL 7035)

DELIVERY COMPRISES

Item	Qty	Description
1	1	Rear panel, St, 1 mm, twist-locking catch (Torx T30, with 1/4 turn)
2	1	Assembly kit

ORDER INFORMATION

For cabinet height	Height	Colour RAL 7021	ColourRAL 7035
U	mm	Part no.	Part no.
9	422	25230-371	**26230-371**
12	555	25230-372	**26230-372**
16	733	25230-373	**26230-373**
20	911	25230-374	**26230-374**
25	1133	25230-375	**26230-375**
29	1345	25230-147	26230-147
34	1534	25230-376	**26230-376**
38	1711	25230-377	**26230-377**
43	1933	25230-378	**26230-378**
47	2111	25230-379	26230-379

REAR PANEL WITH CABLE DUCTING FRAME

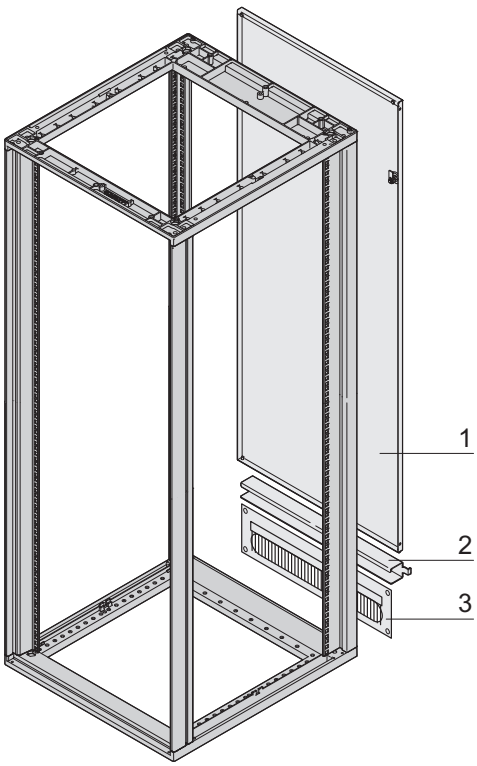

07011058

- Twist-locking catch (Torx T30, with 1/4 turn)
- Rear panel: colour black grey (RAL 7021) or light grey (RAL 7035)
- Cable ducting frame 3 or 4 U

DELIVERY COMPRISES

Item	Qty	Description
1	1	Rear panel, St, 1 mm, colour see Order information; twist-locking catch (Torx T30, with 1/4 turn)
2	1	Door hinge bracket, St, 2 mm, colour see Order information
3	1	Frame for cable ducting, St, 1.5 mm, colour see Order information; brush strip; 3 U frame for cable ducting for cabinet heights 16, 20, 38, 47 U; 4 U frame for cable ducting for cabinet heights 25, 34, 43 U
4	1	Assembly kit and GND/earthing kit

ORDER INFORMATION

For cabinet height	Height	For cabinet width	Colour RAL 7021	ColourRAL 7035
U	mm	mm	Part no.	Part no.
16	733	553	25230-430	**26230-430**
20	911	553	25230-434	**26230-434**
25	1133	553	25230-439	**26230-439**
34	1534	553	25230-448	**26230-448**
38	1711	553	25230-452	**26230-452**
43	1933	553	25230-457	**26230-457**
47	2111	553	25230-461	26230-461

Part number in bold face type: ready for despatch within 2 working days
Part number in normal type: ready for despatch within 10 working days

BASE PLATE, MULTI-PIECE

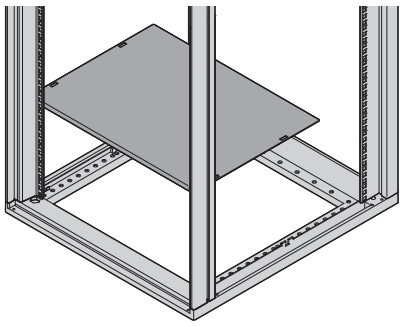

07011073

- Floor is open at rear; Opening can be closed with a cover plate or brush strip

DELIVERY INCLUDES

Item	Qty	Description
1	1	Base plate, St, 1.5 mm, RAL 7021; cable through-ducting opening, width 440 mm, depth 70 mm
2	1	Assembly kit

ORDER INFORMATION

For cabinet depth mm	For cabinet width mm	Part no.
500	553	27230-188
600	553	27230-189
800	553	27230-190
1000	553	27230-191
1200	553	27230-192
Accessories		
Brush strip Nylon, black, 440 mm x 98 mm, PU 1 piece		**27230-079**
Solid cover plate for floor, multi-piece, St, 1 mm, 485 mm x 92 mm, RAL 7021, 1 piece		**27230-114**
Perforated cover plate for floor, multi-piece St, 1 mm, 485 mm x 92 mm, RAL 7021, 1 piece		**27230-254**
Filter mat cover plate for floor, multi-piece St, 1 mm, 485 mm x 92 mm, RAL 7021, 1 piece		**27230-255**

Accessories

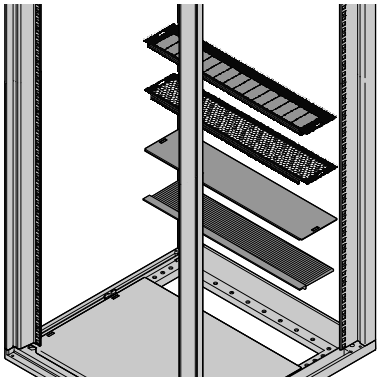

07016050

NOTE

- Please order cover plate or brush strip separately

BASE PLATE, SINGLE PIECE, REINFORCED, WITH CUTOUTS FOR CABLE DUCTING

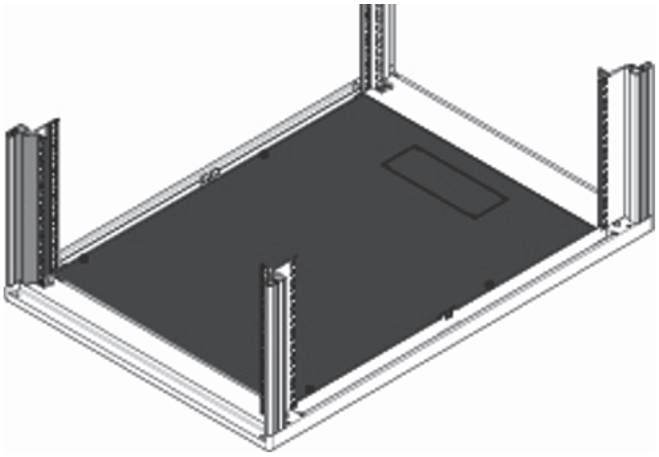

07016059

- Heavy-load floor panel
- Load-carrying capacity 50 kg (110 lbs)
- Cutout for cable ducting

DELIVERY INCLUDES

Item	Qty.	Description
1	1	Base plate, St, 2,5 mm, RAL 7021; cable ducting opening, perforated, width 370 mm, depth 50 mm
2	1	Fixing materials kit including GND

ORDER INFORMATION

For cabinet depth mm	For cabinet width mm	Qty/PU piece	Part no. RAL 7021
500	553	1	25230-149
600	553	1	25230-150
800	553	1	25230-151
900	553	1	25230-152
1000	553	1	25230-153
Accessories			
Brush strip for heavy-load floor panel Nylon, black, width 370 mm, depth 50 mm 1 piece			27230-055

Reinforced brush strip for floor

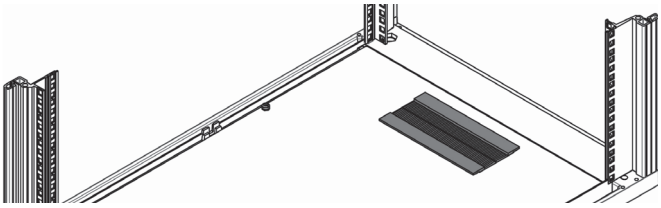

07016060

NOTE

- Please order brush strip separately

Cabinets – Novastar

CASTORS

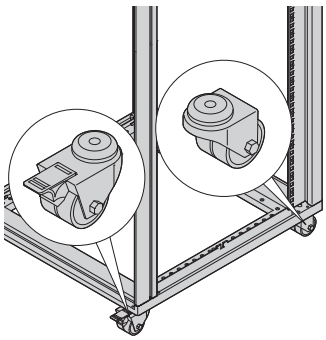

Load-carrying capacity 200 kg

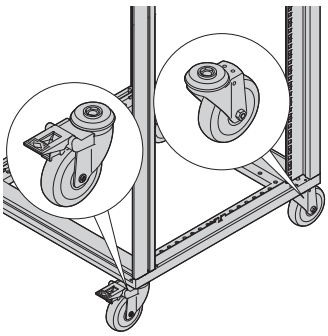

Load-carrying capacity 300 kg, conductive, ESD resistance < 10 kΩ

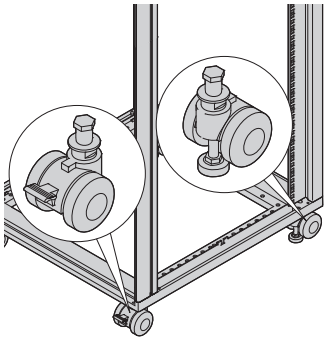

Load-carrying capacity 400 kg, with adjustable feet

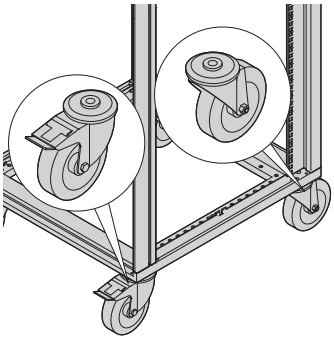

Load-carrying capacity 400 kg

- Castors are fitted to the frame
- Static load-carrying capacity 200 kg, 300 kg or 400 kg depending on version
- Height dependent on version 73 mm, 80 mm, 131 mm or 155 mm
- 2 castors without jacking foot, 2 castors with jacking foot

DELIVERY COMPRISES

Item	Qty	Description
1	2	Locking castor, PA/St
2	2	Non-locking castor, PA/St
3	1	Assembly kit

ORDER INFORMATION

Description	Load-carrying capacity kg	Height H mm	Castor diameter mm	Part no.
Castors	200	73	Ø 50	**27230-067**
Castors, conductive, ESD resistance < 10 kΩ to EN 12528	300	131	Ø 100	**27230-110**
Castors with adjustable feet	400	80	Ø 60	**27230-068**
Castors	400	155	Ø 125	**27230-069**

Part number in bold face type: ready for despatch within 2 working days
Part number in normal type: ready for despatch within 10 working days

BASE/PLINTH WITH CABLE DUCTING

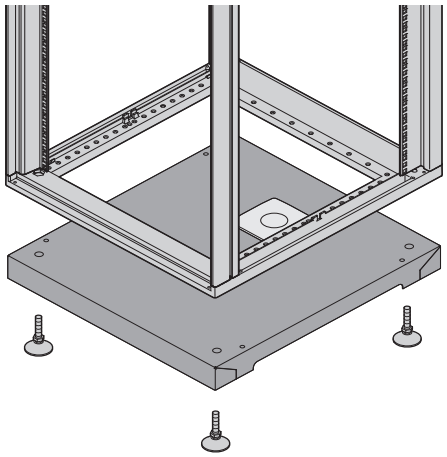

07011075

- Static load-carrying capacity 400 kg
- Height adjustable 57 .... 67 mm
- Cable ducting (110 x 76 mm) with cover

DELIVERY COMPRISES (assembled)

Item	Qty	Description
1	1	Base/plinth, St, 1.5 mm, height 55 mm, RAL 7021; cable ducting 110 mm x 76 mm, with plastic cover
2	4	Adjustable foot
3	1	Assembly kit and GND/earthing kit

ORDER INFORMATION

For cabinet width mm	For cabinet depth mm	Part no.
553	500	**27230-070**
553	600	**27230-071**
553	800	**27230-072**
553	900	27230-076
553	1000	27230-080
Accessories		
Brush strip Nylon, black, 110 mm x 76 mm; to cover cable through-ducting opening , 1 piece		**27230-111**

MOBILE BASE/PLINTH

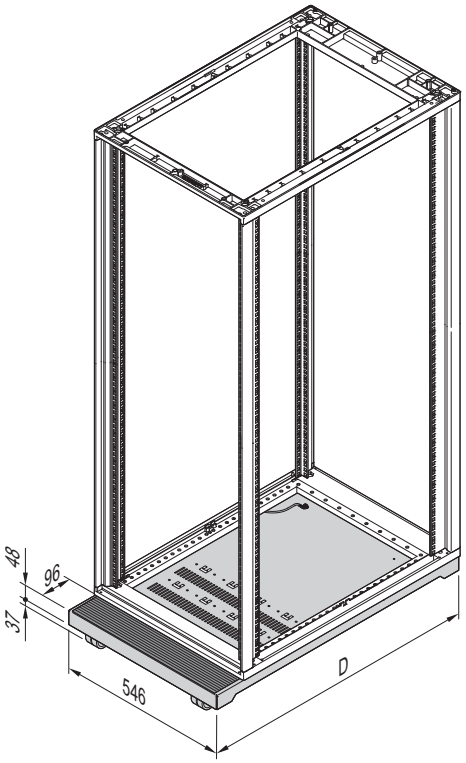

07011113

- Static load-carrying capacity 200 kg
- Base/plinth height H = 100 mm

DELIVERY COMPRISES

Item	Qty	Description
1	1	Base/plinth, St, 2 mm, black (RAL 7021), with perforation, height = 100 mm
2	1	Fine-grooved mat, natural rubber, anthracite, 3 mm thick, self-adhesive
3	4	Castors, St, Ø 55 mm, load-carrying capacity 200 kg
4	1	Assembly kit

ORDER INFORMATION

For cabinet depth mm	D mm	Part no.
500	592	**27230-146**
600	692	**27230-147**
800	892	**27230-148**

DEPTH MEMBERS

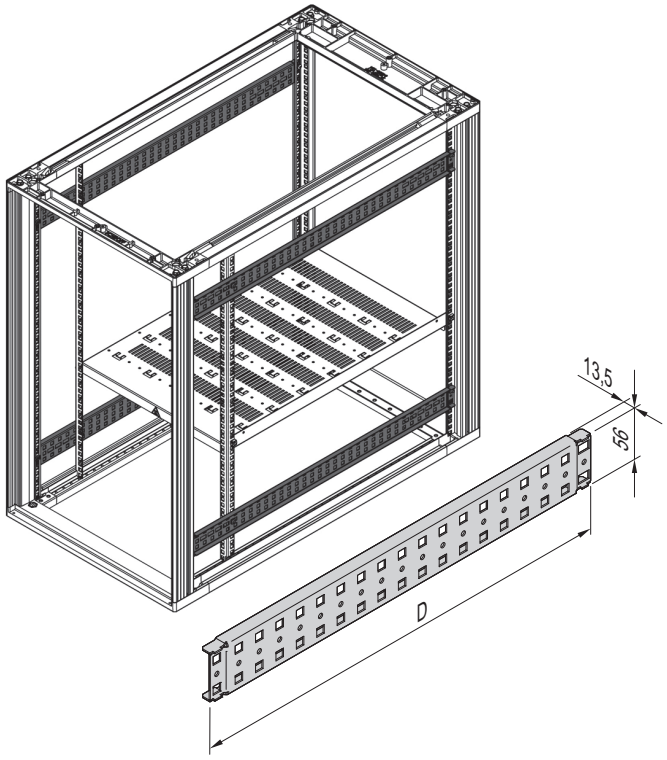

- For assembly on cabinet uprights
- Adjustable in 1 U increments

DELIVERY INCLUDES

Item	Qty	Description
1	1	Depth member, St, 1.5 mm, finish AlZn

ORDER INFORMATION

For cabinet depth mm	D mm	Part no.
500	366	27230-167
600	466	27230-168
800	666	27230-169
900	766	27230-170
1000	866	27230-171

19" PANEL/SLIDE MOUNTS WITH UNIVERSAL PERFORATION GRID (EIA)

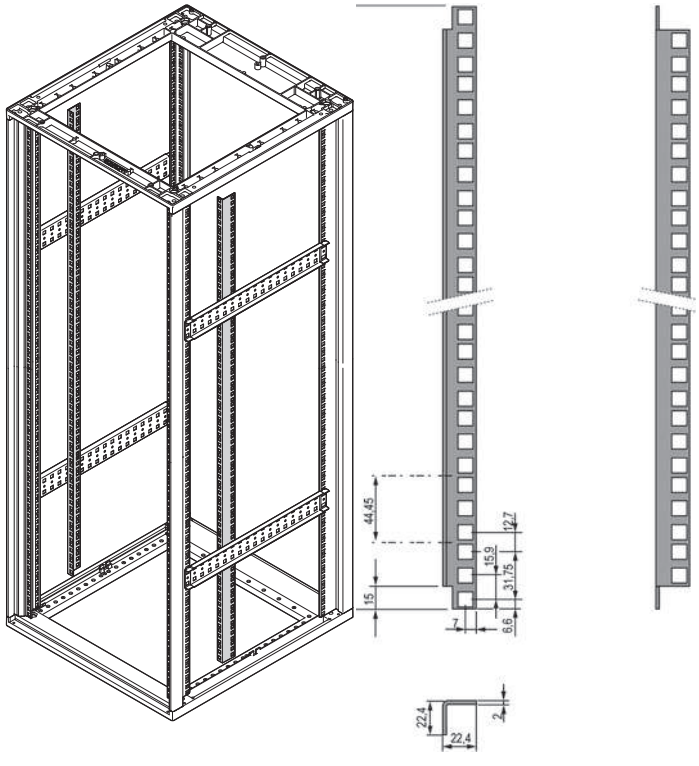

19" panel/slide mount mounted on depth members

- For fitting to depth members (25 mm grid)
- For recessed installation of 19" components
- Load-carrying capacity 400 kg
- Slide rails can be fitted
- A partial-height 19" mounting is possible with short 19" panel/slide mounts

DELIVERY INCLUDES

Item	Qty	Description
1	2	19" panel/slide mount, St, 2 mm, RAL 7021
2	1	Assembly kit

ORDER INFORMATION

For cabinet height U	mm	Usable height U	H mm	Part no.
6	357	6	267	27230-172
9	456	9	400	27230-173
12	589	12	534	27230-174
16	767	16	712	27230-175
20	945	20	889	27230-176
25	1167	25	1112	27230-177
34	1567	34	1512	27230-178
38	1745	38	1690	27230-179
43	1967	43	1912	27230-180
47	2145	47	2090	27230-181

- Slide rails see page 1.256
- Depth members are required for fitting, see page 1.255

19" PLANE FOR UNIVERSAL UPRIGHT

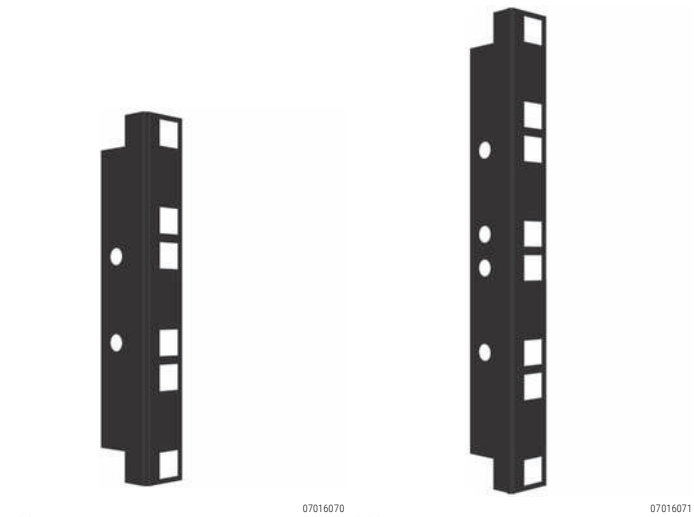

3 U 4 U

- Panel/slide mount for installing on the universal profile
- A 19" plane can be implemented using the panel/slide mount

DELIVERY INCLUDES

Item	Qty.	Description
1	4	19" panel/slide mount, St, 2 mm, RAL 7021
2	1	Fixing materials kit

ORDER INFORMATION

Height U	Height mm	Qty/PU piece	Part no.
3	130	2	27230-162
4	170	2	27230-163

SLIDE RAIL

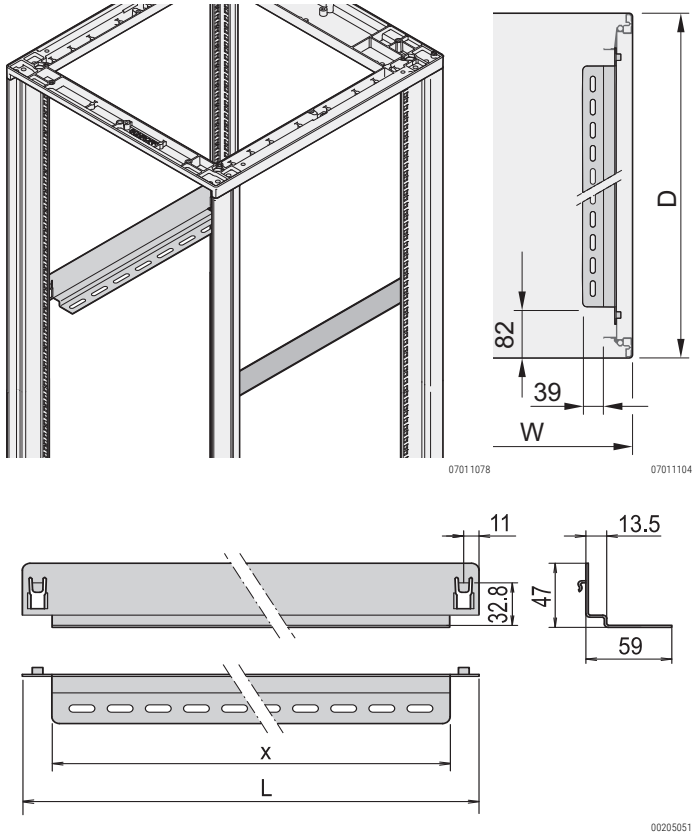

- For mounting on the vertical cabinet uprights or 19" panel/slide mounts
- Adjustable in 1 U increments
- Static load-carrying capacity 25 kg per pair

DELIVERY COMPRISES

Item	Qty	Description
1	2	Slide rail, St, 1.5 mm, finish AlZn
2	1	Assembly kit

ORDER INFORMATION

For cabinet depth D mm	L mm	x mm	Part no.
500	370	322	**27230-102**
600	470	422	**27230-103**
800	670	622	**27230-104**
900	770	722	27230-105
1000	870	822	27230-106

Cabinets – Novastar

HEAVY-LOAD SLIDE RAIL

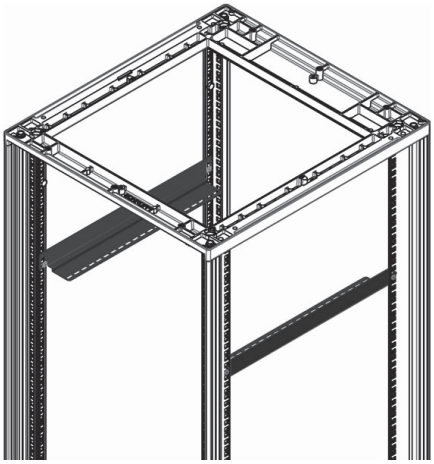

07016066

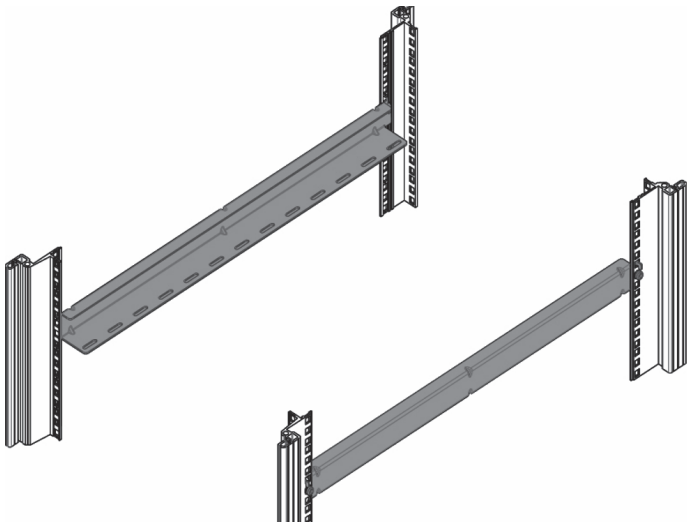

07016084

- For mounting on the vertical cabinet uprights or 19" panel/slide mounts
- Adjustable in 1 U increments
- Static load-carrying capacity 50 kg per pair
- 900, 1000 mm depth for server applications

DELIVERY INCLUDES

Item	Qty.	Description
1	2	Slide rail, St, 2 mm, finish AlZn
2	1	Fixing materials kit

ORDER INFORMATION

For cabinet depth D mm	L mm	x mm	Part no.
500	366.4	336.4	25230-013
600	466.4	436.4	25230-014
800	666.4	636.4	25230-015
900	766.4	736.4	25230-145
1000	866,4	836.4	25230-146
900, 1000 mm for server applications	726.4	699.4	25230-148
Accessories			
Fixing materials kit for heavy-load slide rail 1 set (4 x M5x12 screws, 4 x M5 cage nuts, screwed in from the inside)			27230-056

SHORT SLIDE RAIL

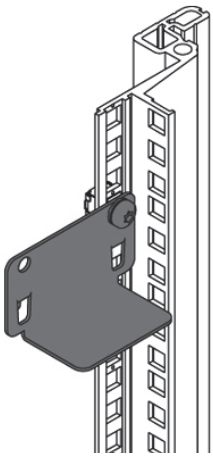

07016065

- For mounting on the cabinet uprights or 19" panel/slide mounts
- Adjustable in 1 U increments
- Static load-carrying capacity max. 15 kg per pair

DELIVERY COMPRISES

Item	Qty	Description
1	2 / 10	Short slide rail, St, 1.5 mm, finish AlZn
2	1	Assembly kit

ORDER INFORMATION

Description	Qty/PU piece	Part no.
Short slide rail	2	27230-184
Short slide rail	10	27230-185

Part number in bold face type: ready for shipping within 2 working days
Part number in normal type: ready for shipping within 10 working days

SHELF, STATIONARY

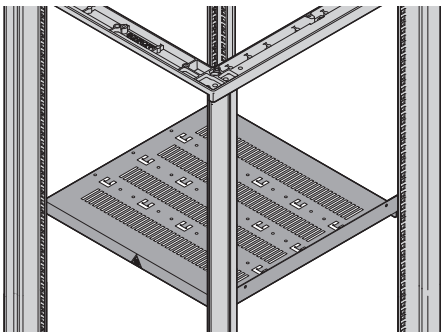

07011077

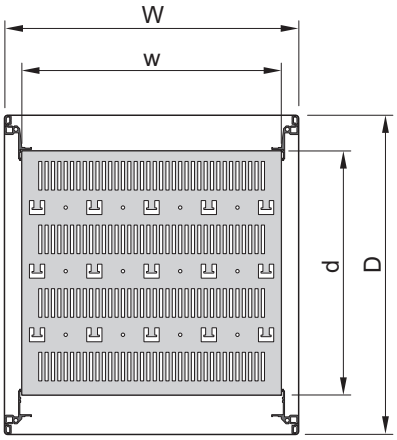

07011105

W = 553 mm

- Static load-carrying capacity 75 kg
- Mounting height 1 U, for fitting on the vertical cabinet uprights
- Hammer head perforation for fixing cables using cable ties or Velcro-type tape
- 900, 1000 mm Tiefe für Server Anwendungen

DELIVERY INCLUDES

Item	Qty	Description
1	1	Shelf with perforation, St, 1.5 mm, RAL 7021
2	1	Assembly kit

ORDER INFORMATION

For cabinet depth D mm	Usable surface w x d mm	Part no.
500	488 x 350	**27230-051**
600	488 x 450	**27230-052**
800	488 x 650	**27230-053**
900	488 x 750	27230-088
1000	488 x 850	27230-089
900, 1000 mm für Serveranwendungen	488 x 740	27230-165
Accessories		
Cable ties 92 mm x 2.5 mm, PU 25 pieces		**20118-351**
Cable ties 186 mm x 5 mm, PU 25 pieces		**20118-352**
Cable ties 360 mm x 5 mm, PU 25 pieces		**20118-353**
Velcro strip Polyethylen/Polyamide, black, length 300 mm, PU 10 pieces		**20118-624**

HINGE (SPARE PART) FOR NOVASTAR

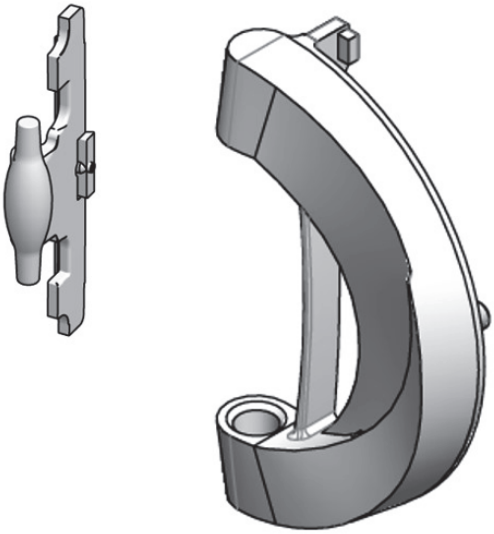

07018050

DELIVERY INCLUDES

Item	Qty	Description
1	2	Hinge
1	1	Cabinet mounting material top and bottom
2	1	GND/earthing kit

ORDER INFORMATION

Description	Part no.
Hinge (spare part) for Novastar	**27230-196**

TELESCOPIC SHELF, 70 KG

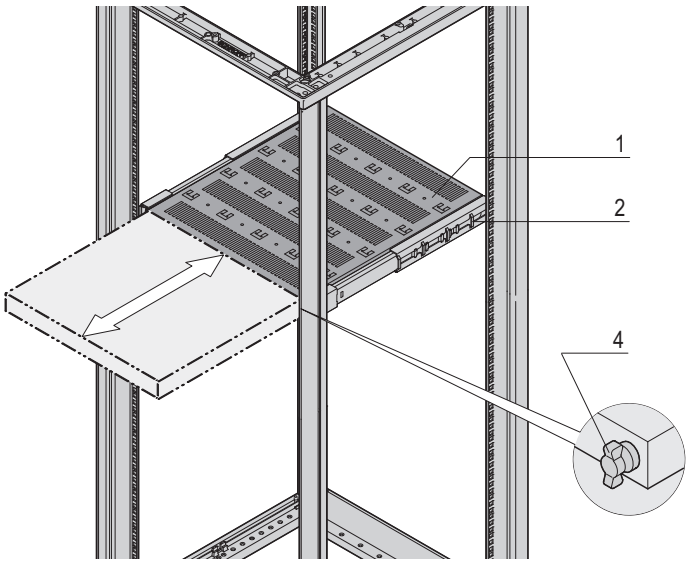

- Static load-carrying capacity at full extension 70 kg
- Mounting height 2 U, for fitting to the four vertical uprights
- Incl. telescopic slides
- Locking possible with T-bar lock
- Hammer head perforation for fixing cables using cable ties or Velcro-type tape
- 2 versions
  - Full depth
  - Depth shortened by 100 mm for rear cable ducting

DELIVERY COMPRISES

Item	Qty	Description
1	1	Shelf with perforation, St, 1.5 mm, RAL 7021
2	2	Telescopic slide
3	1	Assembly kit

Full depth

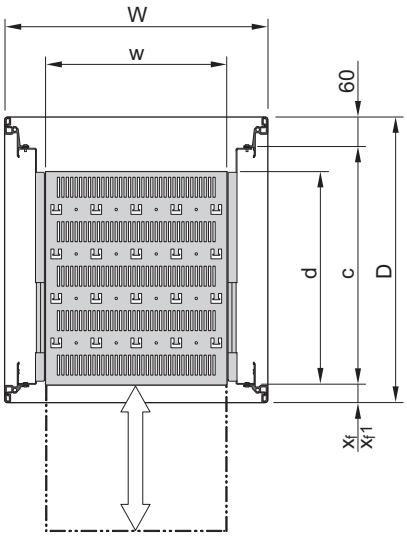

ORDER INFORMATION

Full depth

Cabinet dimensions W x D	Usable surface w x d	x_f	x_f1	c	**Full depth**
mm	mm	mm	mm	mm	Part no.
553 x 500	405 x 382	33	60	407	**21130-357**
553 x 600	405 x 482	33	60	507	**21130-353**
553 x 800	405 x 682	33	60	687	**21130-355**
533 x 900, 740 mm für Serveranwendungen	405 x 582	33	60	787	27230-108
533 x 1000	405 x 682	33	60	887	27230-109
Item 4 T-bar lock for 1 telescopic shelf (can be mounted right or left), 1 piece					**23130-092**
GND/earthing for telescopic shelf PU 1 piece					**21120-189**

Shortened depth

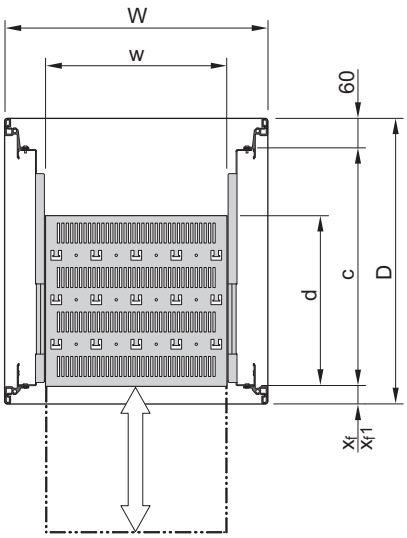

ORDER INFORMATION

Shortened by 100 mm

Cabinet dimensions W x D	Usable surface w x d	x_f	x_f1	c	**Shortened by 100 mm**
mm	mm	mm	mm	mm	Part no.
553 x 500	405 x 282	33	60	407	21130-358
553 x 600	405 x 382	33	60	507	**21130-352**
553 x 800	405 x 582	33	60	687	**21130-354**
533 x 900, 740 mm für Serveranwendungen	405 x 582	33	60	787	27230-108
533 x 1000	405 x 682	33	60	887	27230-109
Item 4 T-bar lock for 1 telescopic shelf (can be mounted right or left), 1 piece					**23130-092**
GND/earthing for telescopic shelf PU 1 piece					**21120-189**

c = pitch of 19" profiles; x_f, = Slim-Line assembly dimensions; x_f1 = Heavy-Duty assembly dimensions

Part number in bold face type: ready for shipping within 2 working days
Part number in normal type: ready for shipping within 10 working days

SUPPORT ARMS FOR MONITOR, KEYBOARD AND MOUSEPAD



Support arm fitted with monitor



Support arm fitted with monitor, keyboard and MousePad

- Support arm for mounting of monitor, keyboard and mouse on cabinet
- Fixing is to the side of the Heavy-Duty frame (height adjustable)
- Static load-carrying capacity 8 ... 10 kg
- Support arm:
  - Height-adjustable 300 mm
  - Angle of rotation on cabinet 180 °
  - Monitor rotation angle 340° (fitted on cabinet 270°)
  - Monitor tilt angle -20°...+90°
  - Integrated cable routing
- Suitable for industrial applications

DELIVERY COMPRISES

Item	Qty	Description
1	1	Support arm frame, Al extrusion, RAL 7035, rotatable, height adjustable
2	1	Wall-mounting bracket, for mounting on cabinet or wall, hinged sideways through 180°
3	1	Keyboard storage point, tiltable upward through 95°, width 480 mm, depth 170 mm; mouse pad: width 150 mm, depth 190 mm
4	1	Monitor holder for flat-screen units, hinged through 340°, tiltable through -20°..+90°

ORDER INFORMATION

Description	Qty/PU pieces	Part no.
Support arm for monitor	1	**60118-562**
Support arm for monitor, keyboard and Mousepad	1	**60118-563**
Accessories		
Mounting material for Novastar		**25630-184**

SERVICEPLUS: CONFIGURATION AND ASSEMBLY

- Dimensions:
  - Height: 6 ... 47 U (357 ... 2145 mm)
  - Width: 553 mm
  - Depth: 500, 600, 800, 900, 1000 mm
- 3 frame versions:
  - Slim-Line, static load-carrying capacity 200 kg, height 6 ... 47 U
  - Heavy-Duty, static load-carrying capacity 400 kg, 19" + Universal, height 16 ... 47 U
- Configure your cabinet from individual parts (to have them assembled please add the suffix **/05** to each part number)
- Once you have selected your cabinet dimensions, the row number (first column of the configuration tables) guides you through all the pages of the configurations possible for these dimensions (see example below)
- The configured cabinet is assembled and is ready for despatch within 10 working days

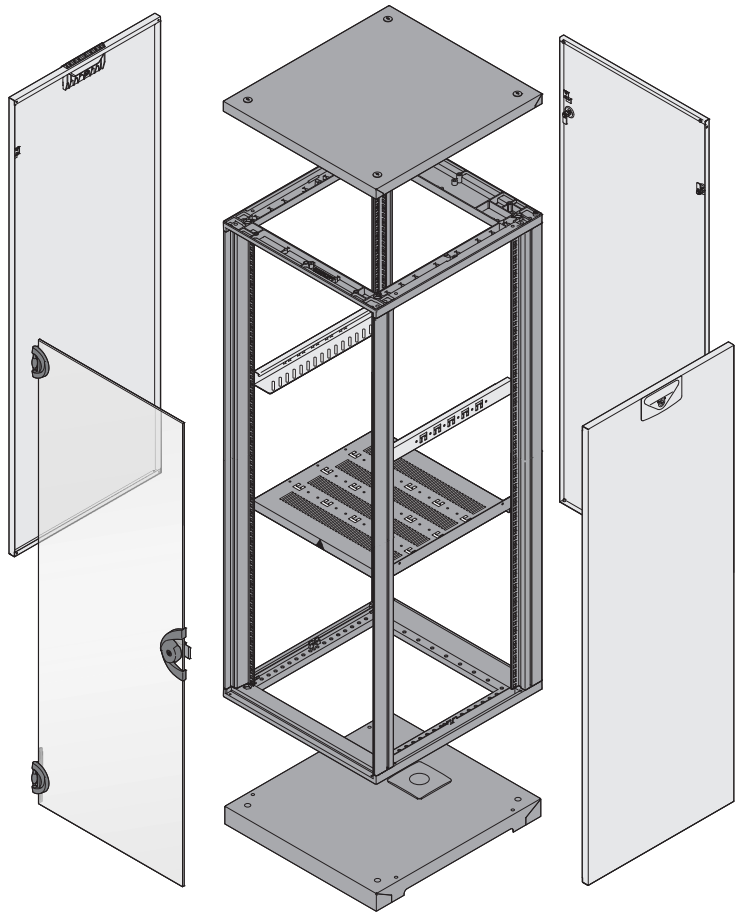

07011052

Configuration example, assembled (here: row no. 11)

Qty	Description	Order no.
1	Frame, Slim-Line, usable height 20 U, height 945 mm, width 553 mm, depth 500 mm, 1 piece	28230-015/05
1	Side panel, Slim-Line, height 20 U, depth 500 mm, RAL 7035, PU 2 pieces	26230-074/05
1	Glass door (smoke grey), height 20 U, opening angle 180°, width 553 mm, 1 piece	27230-005/05
1	Rear panel, height 20 U, width 553 mm, RAL 7035, PU 1 piece	26230-374/05
1	Top cover, raised, width 553 mm, depth 500 mm, RAL 7021, 1 piece	25230-010/05
..	.....	.....

	Page
Frames, gasketing kit, side-by-side mounting kit, stacking kit	1.262
Castors, adjustable feet	1.263
Side panels	1.264
Glass doors, steel doors	1.265
Cable ducting for steel doors	1.266
Rear panels	1.267
Top covers	1.268
Fan top covers, lifting eye, thermostat, speed controller	1.269
Floors	1.270
Base/plinth	1.271
19" panel/slide mounts, depth members, shelves	1.272
Shelves	1.273
Slide rails	1.274
Cable ties, Velcro-type tape	1.275

Part number in bold face type: ready for despatch within 2 working days
Part number in normal type: ready for despatch within 10 working days

Cabinets – Novastar Service Plus

FRAMES, GASKETING KIT, SIDE-BY-SIDE MOUNTING KIT, STACKING KIT

				Frame			Gasketing kit for IP 40	Side-by-side mounting kit	Stacking kit	Slide nut for T-groove
				Slim-Line 200 kg	Heavy-Duty 400 kg, 19"	Heavy-Duty, 400 kg, Universal				
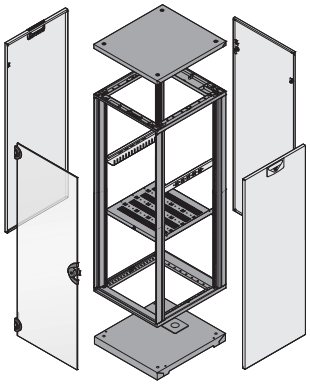				 07011053	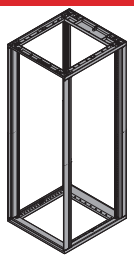 07011054	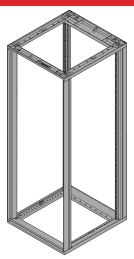 07016056	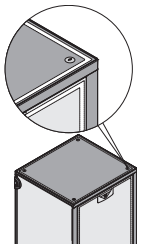 07012050	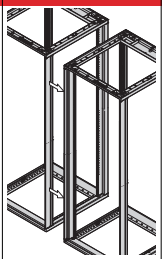 07011080	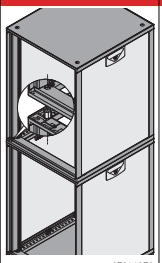 07011070	 aza43431
				static load-carrying capacity: 200 kg, Al extrusion, RAL 7021, incl. GND/earthing; 19" plane 33 mm at front, 60 mm at rear; please order castors or adjustable feet separately	static load-carrying capacity: 400 kg, Al extrusion, RAL 7021, incl. GND/earthing; 19" plane 60 mm at front, 60 mm at rear; please order castors or adjustable feet separately	Static load-carrying capacity: 400 kg, Al profile, RAL 7021, incl. grounding; 19" plane rear 60 mm, castors or adjustable feet ordered separately	TPE, black; raises ingress protection from IP 20 to IP 40; gaskets are affixed onto the frame	gasket, foam adhesive tape: PU foam anthracite; for joining two adjacent cabinets plus assembly kit	for joining two cabinets positioned one above the other	St, M6, for lateral mounting of accessories on the T-groove of the Heavy-Duty frame
	Cabinet dimensions									
	Height		Width	Depth	1 piece	1 piece	1 piece	PU 1 kit	PU 1 kit	PU 1 kit	PU 4 pieces
No.	U	mm	mm	mm	assembled	assembled	assembled	assembled	enclosed loose	enclosed loose	enclosed loose
1	6	323	553	500	28230-001	–	–	27230-107	**20230-409**	**27230-112**	**27230-144**
2	6	323	553	600	28230-060						
3	9	456	553	500	28230-004	–	–	27230-107	**20230-409**	**27230-112**	**27230-144**
4	9	456	553	600	28230-063						
5	12	589	553	500	28230-007	–	28230-057	27230-107	**20230-409**	**27230-112**	**27230-144**
6	12	589	553	600	28230-066	–	28230-058				
7	12	589	553	800	28230-126	–	28230-059				
8	12	589	553	900	28230-054	28230-056	28230-107				
9	12	589	553	1000	28230-055	28230-189	28230-108				
10	16	767	553	500	28230-011	28230-310	28230-109	27230-107	**20230-409**	**27230-112**	**27230-144**
11	16	767	553	600	28230-070	28230-370	28230-110				
12	16	767	553	800	28230-130	28230-430	28230-111				
13	16	767	553	900	28230-190	28230-192	28230-112				
14	16	767	553	1000	28230-191	28230-193	28230-113				
15	20	945	553	500	28230-015	28230-314	28230-114	27230-107	**20230-409**	**27230-112**	**27230-144**
16	20	945	553	600	28230-074	28230-374	28230-115				
17	20	945	553	800	28230-134	28230-434	28230-116				
18	20	945	553	900	28230-194	28230-196	28230-117				
19	20	945	553	1000	28230-195	28230-197	28230-118				
20	25	1167	553	500	28230-020	28230-319	28230-119	27230-143	**20230-409**	**27230-112**	**27230-144**
21	25	1167	553	600	28230-079	28230-379	28230-167				
22	25	1167	553	800	28230-139	28230-439	28230-168				
23	25	1167	553	900	28230-198	28230-200	28230-169				
24	25	1167	553	1000	28230-199	28230-201	28230-170				
25	34	1567	553	500	28230-029	28230-328	28230-171	27230-143	**20230-409**	**27230-112**	**27230-144**
26	34	1567	553	600	28230-088	28230-388	28230-172				
27	34	1567	553	800	28230-148	28230-448	28230-173				
28	34	1567	553	900	28230-202	28230-204	28230-174				
29	34	1567	553	1000	28230-203	28230-205	28230-175				
30	38	1745	553	500	28230-033	28230-332	28230-176	27230-143	**20230-409**	**27230-112**	**27230-144**
31	38	1745	553	600	28230-092	28230-392	28230-177				
32	38	1745	553	800	28230-152	28230-452	28230-178				
33	38	1745	553	900	28230-206	28230-208	28230-179				
34	38	1745	553	1000	28230-207	28230-209	28230-180				
35	43	1967	553	500	28230-048	28230-337	28230-181	27230-143	**20230-409**	**27230-112**	**27230-144**
36	43	1967	553	600	28230-097	28230-397					
37	43	1967	553	800	28230-157	28230-457	28230-183				
38	43	1967	553	900	28230-210	28230-212	28230-184				
39	43	1967	553	1000	28230-211	28230-213	28230-185				
40	47	2145	553	500	28230-042	28230-341	28230-186	27230-143	**20230-409**	**27230-112**	**27230-144**
41	47	2145	553	600	28230-101	28230-401	28230-187				
42	47	2145	553	800	28230-162	28230-461	28230-188				
43	47	2145	553	900	28230-214	28230-216	28230-052				
44	47	2145	553	1000	28230-215	28230-217	28230-053				

Cabinets – Novastar Service Plus

CASTORS, ADJUSTABLE FEET

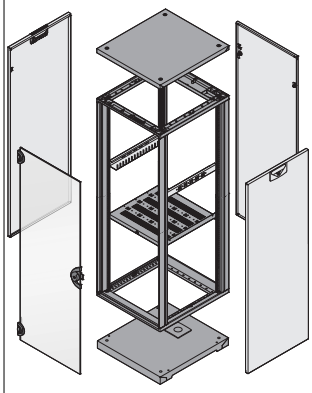

					Castors				Adjustable foot
					Load-carrying capacity 200 kg	Load-carrying capacity 300 kg, conductive	Load-carrying capacity 400 kg, Ø 60 mm	Load-carrying capacity 400 kg, Ø 125 mm	
					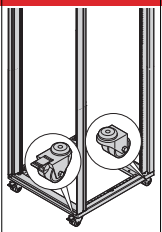 07011065 static load-carrying capacity 200 kg, height 73 mm, Ø 50 mm, 2 castors without jacking foot, 2 castors with jacking foot	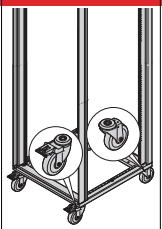 07011066 static load-carrying capacity 300 kg, height 131 mm, Ø 100 mm, 2 castors without jacking foot, 2 castors with jacking foot; EN 12528 (resistance < 10 kΩ)	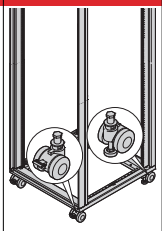 07011067 static load-carrying capacity 400 kg, height 80 mm, Ø 60 mm, 2 castors without jacking foot, 2 castors with jacking foot, incl. 4 adjustable feet	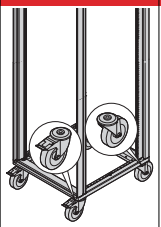 07011068 static load-carrying capacity 400 kg, height 155 mm, Ø 125 mm, 2 castors without jacking foot, 2 castors with jacking foot	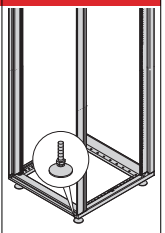 07011069 static load-carrying capacity 400 kg, St, polyamide, black
	Cabinet dimensions								
	Height		Width	Depth	PU 1 kit	PU 1 kit	PU 1 kit	PU 1 kit	PU 1 kit
No.	U	mm	mm	mm	assembled	assembled	assembled	assembled	assembled
1	6	357	553	500	**27230-067**	**27230-110**	**27230-068**	**27230-069**	**27230-100**
2	6	357	553	600					
3	9	456	553	500	**27230-067**	**27230-110**	**27230-068**	**27230-069**	**27230-100**
4	9	456	553	600					
5	12	589	553	500	**27230-067**	**27230-110**	**27230-068**	**27230-069**	**27230-100**
6	12	589	553	600					
7	12	589	553	800					
8	12	589	553	900					
9	12	589	553	1000					
10	16	767	553	500	**27230-067**	**27230-110**	**27230-068**	**27230-069**	**27230-100**
11	16	767	553	600					
12	16	767	553	800					
13	16	767	553	900					
14	16	767	553	1000					
15	20	945	553	500	**27230-067**	**27230-110**	**27230-068**	**27230-069**	**27230-100**
16	20	945	553	600					
17	20	945	553	800					
18	20	945	553	900					
19	20	945	553	1000					
20	25	1167	553	500	**27230-067**	**27230-110**	**27230-068**	**27230-069**	**27230-100**
21	25	1167	553	600					
22	25	1167	553	800					
23	25	1167	553	900					
24	25	1167	553	1000					
25	34	1567	553	500	**27230-067**	**27230-110**	**27230-068**	**27230-069**	**27230-100**
26	34	1567	553	600					
27	34	1567	553	800					
28	34	1567	553	900					
29	34	1567	553	1000					
30	38	1745	553	500	**27230-067**	**27230-110**	**27230-068**	**27230-069**	**27230-100**
31	38	1745	553	600					
32	38	1745	553	800					
33	38	1745	553	900					
34	38	1745	553	1000					
35	43	1967	553	500	**27230-067**	**27230-110**	**27230-068**	**27230-069**	**27230-100**
36	43	1967	553	600					
37	43	1967	553	800					
38	43	1967	553	900					
39	43	1967	553	1000					
40	47	2145	553	500	**27230-067**	**27230-110**	**27230-068**	**27230-069**	**27230-100**
41	47	2145	553	600					
42	47	2145	553	800					
43	47	2145	553	900					
44	47	2145	553	1000					

Part number in bold face type: ready for despatch within 2 working days
Part number in normal type: ready for despatch within 10 working days

Cabinets – Novastar Service Plus

SIDE PANELS

					Side panel				
					Slim-Line		Heavy-Duty		Side panel lock
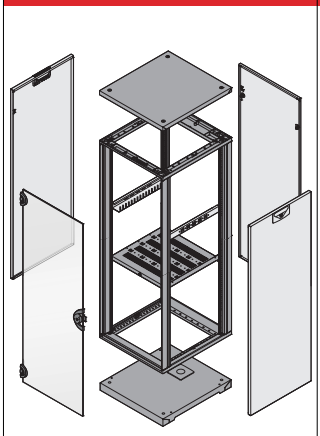					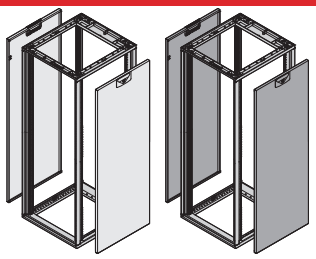 07011055 07011084 St, 1 mm, with quarter-turn fastener; incl. GND/earthing		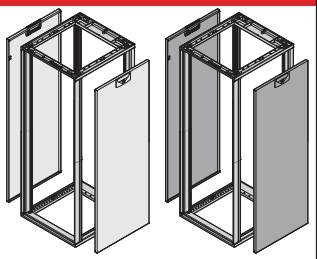 07011056 07011085 St, 1 mm, with quarter-turn fastener; incl. GND/earthing		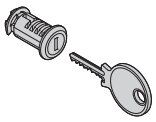 07011108 2 locks (2233x locking), 2 keys; suitable for 2 side panels
	Cabinet dimensions				RAL 7035	RAL 7021	RAL 7035	RAL 7021	
	Height		Width	Depth	PU 2 pieces	PU 2 pieces	PU 2 pieces	PU 2 pieces	PU 1 kit
No.	U	mm	mm	mm	assembled	assembled	assembled	assembled	assembled
1	6	357	553	500	26230-070	25230-070	–	–	27230-115
2	6	357	553	600	26230-120	25230-120			
3	9	456	553	500	26230-071	25230-071	–	–	27230-115
4	9	456	553	600	26230-121	25230-121			
5	12	589	553	500	26230-072	25230-072	26230-222	25230-222	27230-115
6	12	589	553	600	26230-122	25230-122	26230-272	25230-272	
7	12	589	553	800	26230-172	25230-172	26230-322	25230-322	
8	12	589	553	900	26230-113	25230-113	26230-067	25230-067	
9	12	589	553	1000	26230-114	25230-114	26230-068	25230-068	
10	16	767	553	500	26230-073	25230-073	26230-223	25230-223	27230-115
11	16	767	553	600	26230-123	25230-123	26230-273	25230-273	
12	16	767	553	800	26230-173	25230-173	26230-323	25230-323	
13	16	767	553	900	26230-115	25230-115	26230-069	25230-069	
14	16	767	553	1000	26230-116	25230-116	26230-080	25230-080	
15	20	945	553	500	26230-074	25230-074	26230-224	25230-224	27230-115
16	20	945	553	600	26230-124	25230-124	26230-274	25230-274	
17	20	945	553	800	26230-174	25230-174	26230-324	25230-324	
18	20	945	553	900	26230-117	25230-117	26230-103	25230-103	
19	20	945	553	1000	26230-118	25230-118	26230-104	25230-104	
20	25	1167	553	500	26230-075	25230-075	26230-225	25230-225	27230-115
21	25	1167	553	600	26230-125	25230-125	26230-275	25230-275	
22	25	1167	553	800	26230-175	25230-175	26230-325	25230-325	
23	25	1167	553	900	26230-119	25230-119	26230-105	25230-105	
24	25	1167	553	1000	26230-130	25230-130	26230-106	25230-106	
25	34	1567	553	500	26230-076	25230-076	26230-226	25230-226	27230-115
26	34	1567	553	600	26230-126	25230-126	26230-276	25230-276	
27	34	1567	553	800	26230-176	25230-176	26230-326	25230-326	
28	34	1567	553	900	26230-131	25230-131	26230-107	25230-107	
29	34	1567	553	1000	26230-132	25230-132	26230-108	25230-108	
30	38	1745	553	500	26230-077	25230-077	26230-227	25230-227	27230-115
31	38	1745	553	600	26230-127	25230-127	26230-277	25230-277	
32	38	1745	553	800	26230-177	25230-177	26230-327	25230-327	
33	38	1745	553	900	26230-133	25230-133	26230-109	25230-109	
34	38	1745	553	1000	26230-134	25230-134	26230-110	25230-110	
35	43	1967	553	500	26230-078	25230-078	26230-228	25230-228	27230-115
36	43	1967	553	600	26230-128	25230-128	26230-278	25230-278	
37	43	1967	553	800	26230-178	25230-178	26230-328	25230-328	
38	43	1967	553	900	26230-135	25230-135	26230-111	25230-111	
39	43	1967	553	1000	26230-136	25230-136	26230-112	25230-112	
40	47	2145	553	500	26230-079	25230-079	26230-229	25230-229	27230-115
41	47	2145	553	600	26230-129	25230-129	26230-279	25230-279	
42	47	2145	553	800	26230-179	25230-179	26230-329	25230-329	
43	47	2145	553	900	26230-137	25230-137	26230-040	25230-040	
44	47	2145	553	1000	26230-138	25230-138	26230-041	25230-041	

Cabinets – Novastar Service Plus

GLASS DOORS, STEEL DOORS

					Steel door		Steel door Perforated		Glazed door		Glass door
					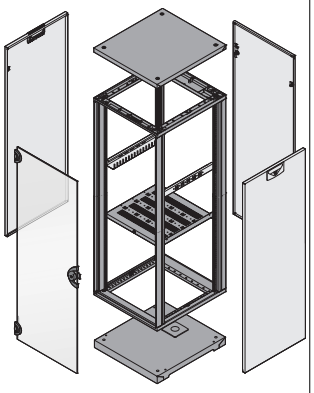				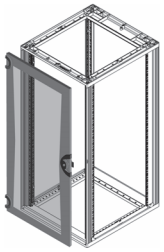		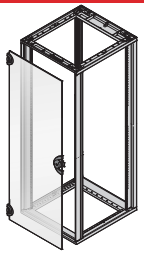
					07011060	07011088	07016078		07011060	07016054	07011059
					St, 1.5 mm, lock (2233x) with 1 key, opening angle 180, incl. GND/earthing		St, 1.5 mm, perforated, opening angle 180°, lock with key (2233X), incl. grounding		Door frame, St, 1.5 mm; acrylic glass, 2 mm; safety lock with 2 keys		opening angle 180°, lock with key, glass type: ESG 6 mm, EN 12150
	Cabinet dimensions				RAL 7035	**RAL 7021**	RAL 7035	**RAL 7021**	RAL 7035	RAL 7021	smoke grey
	Height		Width	Depth	1 piece	1 piece	1 piece	1 piece	1 piece	1 piece	1 piece
No.	U	mm	mm	mm	assembled	assembled	assembled	assembled	assembled	assembled	assembled
1	6	357	553	500	**26230-020**	25230-020	26230-081	25230-081	26230-092	25230-092	27230-001
2	6	357	553	600							
3	9	456	553	500	**26230-021**	25230-021	26230-082	25230-082	26230-093	25230-093	**27230-002**
4	9	456	553	600							
5	12	589	553	500	**26230-022**	25230-022	26230-083	25230-083	26230-094	25230-094	**27230-003**
6	12	589	553	600							
7	12	589	553	800							
8	12	589	553	900							
9	12	589	553	1000							
10	16	767	553	500	**26230-023**	25230-023	26230-084	25230-084	26230-095	25230-095	**27230-004**
11	16	767	553	600							
12	16	767	553	800							
13	16	767	553	900							
14	16	767	553	1000							
15	20	945	553	500	**26230-024**	25230-024	26230-085	25230-085	26230-096	25230-096	**27230-005**
16	20	945	553	600							
17	20	945	553	800							
18	20	945	553	900							
19	20	945	553	1000							
20	25	1167	553	500	**26230-025**	25230-025	26230-086	25230-086	26230-097	25230-097	**27230-006**
21	25	1167	553	600							
22	25	1167	553	800							
23	25	1167	553	900							
24	25	1167	553	1000							
25	34	1567	553	500	**26230-026**	25230-026	26230-087	25230-087	26230-098	25230-098	**27230-007**
26	34	1567	553	600							
27	34	1567	553	800							
28	34	1567	553	900							
29	34	1567	553	1000							
30	38	1745	553	500	**26230-027**	25230-027	26230-088	25230-088	26230-099	25230-099	**27230-008**
31	38	1745	553	600							
32	38	1745	553	800							
33	38	1745	553	900							
34	38	1745	553	1000							
35	43	1967	553	500	26230-028	25230-028	26230-089	25230-089	26230-100	25230-100	**27230-009**
36	43	1967	553	600							
37	43	1967	553	800							
38	43	1967	553	900							
39	43	1967	553	1000							
40	47	2145	553	500	26230-029	25230-029	26230-090	25230-090	26230-101	25230-101	27230-010
41	47	2145	553	600							
42	47	2145	553	800							
43	47	2145	553	900							
44	47	2145	553	1000							

Part number in bold face type: ready for despatch within 2 working days
Part number in normal type: ready for despatch within 10 working days

Cabinets – Novastar Service Plus

CABLE DUCTING FOR STEEL DOORS

			Cable ducting for steel door with door hinge bracket and frame									
			Steel door		Door hinge bracket for doors			Cable ducting frame				
			RAL 7035	RAL 7021	Slim-Line front	Slim-Line rear, Heavy-Duty front/ rear, Universal rear	Heavy-Duty Universal front	RAL 7035 screw fixed	RAL 7021 screw fixed	RAL 7021 clipped		
			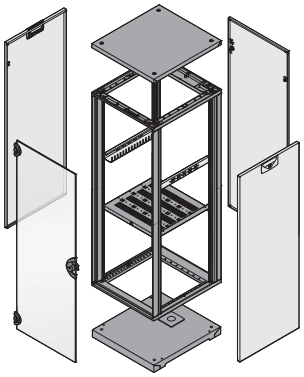	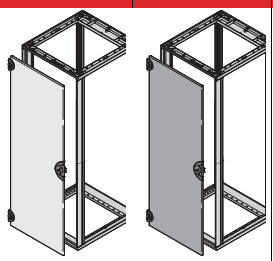 07011060 07011088 St, 1.5 mm, lock (2233x) with 1 key, opening angle 180, incl. GND/earthing		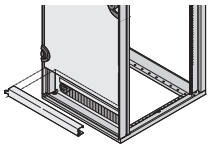 07011061 door hinge bracket, St, 2 mm, RAL 7021; mounts above or below the door; requires 1 U assembly space Heavy-Duty Universal: Short 19" planes are required to mount the door hinge bracket, see page 1.272		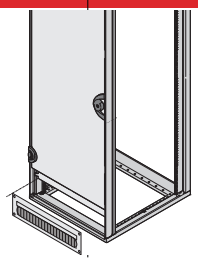 07011061 St, 2.5 mm, with black brush strip 1) Height 3 U 2) Height 4 U	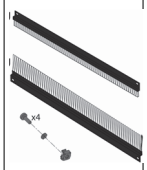 07016073	
No.	Cabinet dimensions Height U	Height mm	Width mm	Depth mm	RAL 7035 1 piece assembled	**RAL 7021** 1 piece assembled	33 mm 1 piece assembled	60 mm 1 piece assembled	60 mm 1 piece assembled	RAL 7035 1 piece assembled	RAL 7021 1 piece assembled	RAL 7021 1 piece assembled
1	6	357	553	500	–	–	–	–	–	–	–	–
2	6	357	553	600								
3	9	456	553	500	–	–	–	–	–	–	–	–
4	9	456	553	600								
5	12	589	553	500	–	–	–	–	–	–	–	–
6	12	589	553	600								
7	12	589	553	800								
8	12	589	553	900								
9	12	589	553	1000								
10	16	767	553	500	**26230-022**	25230-022	**27230-060**	**27230-061**	27230-098	1) **20118-391**	1) **20118-796**	1) 27230-160
11	16	767	553	600								
12	16	767	553	800								
13	16	767	553	900								
14	16	767	553	1000								
15	20	945	553	500	**26230-023**	25230-023	**27230-060**	**27230-061**	27230-098	1) **20118-391**	1) **20118-796**	1) 27230-160
16	20	945	553	600								
17	20	945	553	800								
18	20	945	553	900								
19	20	945	553	1000								
20	25	1167	553	500	**26230-024**	25230-024	**27230-060**	**27230-061**	27230-098	2) **20118-390**	2) **20118-797**	2) 27230-161
21	25	1167	553	600								
22	25	1167	553	800								
23	25	1167	553	900								
24	25	1167	553	1000								
25	34	1567	553	500	**26230-030**	25230-030	**27230-060**	**27230-061**	27230-098	2) **20118-390**	2) **20118-797**	2) 27230-161
26	34	1567	553	600								
27	34	1567	553	800								
28	34	1567	553	900								
29	34	1567	553	1000								
30	38	1745	553	500	**26230-026**	25230-026	**27230-060**	**27230-061**	27230-098	1) **20118-391**	1) **20118-796**	1) 27230-160
31	38	1745	553	600								
32	38	1745	553	800								
33	38	1745	553	900								
34	38	1745	553	1000								
35	43	1967	553	500	**26230-027**	25230-027	**27230-060**	**27230-061**	27230-098	2) **20118-390**	2) **20118-797**	2) 27230-161
36	43	1967	553	600								
37	43	1967	553	800								
38	43	1967	553	900								
39	43	1967	553	1000								
40	47	2145	553	500	26230-028	25230-028	**27230-060**	**27230-061**	27230-098	1) **20118-391**	1) **20118-796**	1) 27230-160
41	47	2145	553	600								
42	47	2145	553	800								
43	47	2145	553	900								
44	47	2145	553	1000								

Cabinets – Novastar Service Plus

REAR PANELS

	Rear panel	Rear panel with cable ducting	Rear panel lock
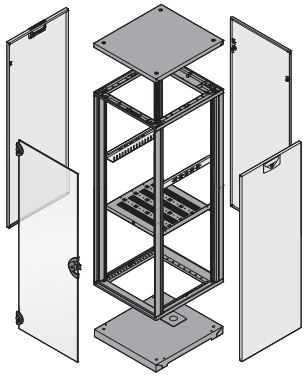	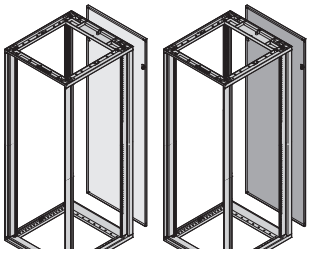 07011057 07011086 St, 1 mm; 2 twist-locking catches (Torx T30, with 1/4 turn); incl. GND/earthing	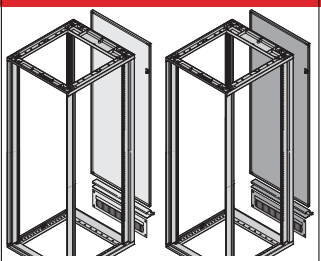 07011058 07011087 St, 1 mm; 2 twist-locking catches (Torx T30, with 1/4 turn), incl. GND/ earthing, cable ducting and door hinge bracket; cable ducting can be fitted at top or bottom, 3 U cable ducting for cabinet height 16, 20, 38, 47 U; 4 U cable ducting for cabinet height 25, 34, 43 U	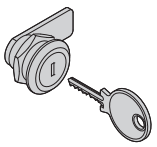 07011107 2 rear panel catches with lock (2233x locking), 2 keys; suitable for a rear panel

No.	Cabinet dimensions Height U	Height mm	Width mm	Depth mm	RAL 7035 1 piece assembled	RAL 7021 1 piece assembled	RAL 7035 PU 1 kit assembled	RAL 7021 PU 1 kit assembled	PU 1 kit assembled
1	6	357	553	500	**26230-370**	25230-370	–	–	27230-116
2	6	357	553	600					
3	9	456	553	500	**26230-371**	25230-371	–	–	27230-116
4	9	456	553	600					
5	12	589	553	500	**26230-372**	25230-372	–	–	27230-116
6	12	589	553	600					
7	12	589	553	800					
8	12	589	553	900					
9	12	589	553	1000					
10	16	767	553	500	**26230-373**	25230-373	**26230-430**	25230-430	27230-116
11	16	767	553	600					
12	16	767	553	800					
13	16	767	553	900					
14	16	767	553	1000					
15	20	945	553	500	**26230-374**	25230-374	**26230-434**	25230-434	27230-116
16	20	945	553	600					
17	20	945	553	800					
18	20	945	553	900					
19	20	945	553	1000					
20	25	1167	553	500	**26230-375**	25230-375	**26230-439**	25230-439	27230-116
21	25	1167	553	600					
22	25	1167	553	800					
23	25	1167	553	900					
24	25	1167	553	1000					
25	34	1567	553	500	**26230-376**	25230-376	**26230-448**	25230-448	27230-116
26	34	1567	553	600					
27	34	1567	553	800					
28	34	1567	553	900					
29	34	1567	553	1000					
30	38	1745	553	500	**26230-377**	25230-377	**26230-452**	25230-452	27230-116
31	38	1745	553	600					
32	38	1745	553	800					
33	38	1745	553	900					
34	38	1745	553	1000					
35	43	1967	553	500	**26230-378**	25230-378	**26230-457**	25230-457	27230-116
36	43	1967	553	600					
37	43	1967	553	800					
38	43	1967	553	900					
39	43	1967	553	1000					
40	47	2145	553	500	26230-379	25230-379	26230-461	25230-461	27230-116
41	47	2145	553	600					
42	47	2145	553	800					
43	47	2145	553	900					
44	47	2145	553	1000					

Part number in bold face type: ready for despatch within 2 working days
Part number in normal type: ready for despatch within 10 working days

Cabinets – Novastar Service Plus

TOP COVERS

	Top cover flush		Top cover raised		Raised top cover, load-carrying capacity 50 kg
	Flush	Lifting eye	Raised	Lifting eye	
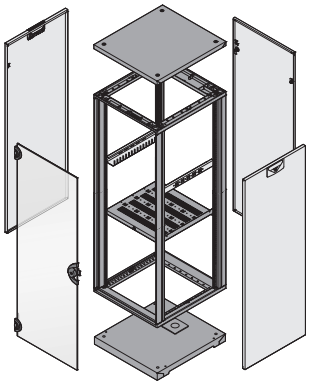	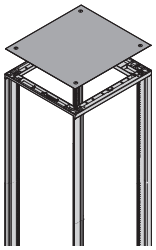 07011063 St, 1 mm, RAL 7021, incl. GND/earthing	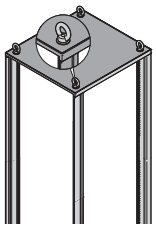 07011071 for flush cover; M12, application and load to DIN 582	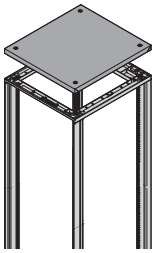 07011064 St, 1 mm, RAL 7021, incl. GND/earthing, height 31 mm, air gap 10 mm	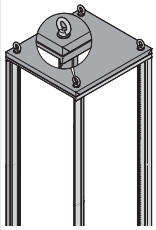 07011072 for raised cover or fan top cover; M12, application an d load to DIN 582	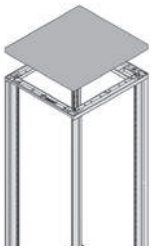 07016077 St, 1 mm, RAL 7021, incl. GND/earthing, height 31 mm, air gap 10 mm, roof mounting from the inside (outside no screws)

No.	Cabinet dimensions Height U	Height mm	Width mm	Depth mm	1 piece assembled	PU 4 pieces assembled	1 piece assembled	PU 4 pieces assembled	1 piece assembled
1	6	357	553	500	25230-001	**27230-066**	25230-010	**27230-065**	25230-039
2	6	357	553	600	25230-002		25230-011		25230-038
3	9	456	553	500	25230-001	**27230-066**	25230-010	**27230-065**	25230-039
4	9	456	553	600	25230-002		25230-011		25230-038
5	12	589	553	500	25230-001		25230-010		25230-039
6	12	589	553	600	25230-002		25230-011		25230-038
7	12	589	553	800	25230-003	**27230-066**	25230-012	**27230-065**	25230-037
8	12	589	553	900	25230-043		25230-045		25230-141
9	12	589	553	1000	25230-044		25230-046		25230-142
10	16	767	553	500	25230-001		25230-010		25230-039
11	16	767	553	600	25230-002		25230-011		25230-038
12	16	767	553	800	25230-003	**27230-066**	25230-012	**27230-065**	25230-037
13	16	767	553	900	25230-043		25230-045		25230-141
14	16	767	553	1000	25230-044		25230-046		25230-142
15	20	945	553	500	25230-001		25230-010		25230-039
16	20	945	553	600	25230-002		25230-011		25230-038
17	20	945	553	800	25230-003	**27230-066**	25230-012	**27230-065**	25230-037
18	20	945	553	900	25230-043		25230-045		25230-141
19	20	945	553	1000	25230-044		25230-046		25230-142
20	25	1167	553	500	25230-001		25230-010		25230-039
21	25	1167	553	600	25230-002		25230-011		25230-038
22	25	1167	553	800	25230-003	**27230-066**	25230-012	**27230-065**	25230-037
23	25	1167	553	900	25230-043		25230-045		25230-141
24	25	1167	553	1000	25230-044		25230-046		25230-142
25	34	1567	553	500	25230-001		25230-010		25230-039
26	34	1567	553	600	25230-002		25230-011		25230-038
27	34	1567	553	800	25230-003	**27230-066**	25230-012	**27230-065**	25230-037
28	34	1567	553	900	25230-043		25230-045		25230-141
29	34	1567	553	1000	25230-044		25230-046		25230-142
30	38	1745	553	500	25230-001		25230-010		25230-039
31	38	1745	553	600	25230-002		25230-011		25230-038
32	38	1745	553	800	25230-003	**27230-066**	25230-012	**27230-065**	25230-037
33	38	1745	553	900	25230-043		25230-045		25230-141
34	38	1745	553	1000	25230-044		25230-046		25230-142
35	43	1967	553	500	25230-001		25230-010		25230-039
36	43	1967	553	600	25230-002		25230-011		25230-038
37	43	1967	553	800	25230-003	**27230-066**	25230-012	**27230-065**	25230-037
38	43	1967	553	900	25230-043		25230-045		25230-141
39	43	1967	553	1000	25230-044		25230-046		25230-142
40	47	2145	553	500	25230-001		25230-010		25230-039
41	47	2145	553	600	25230-002		25230-011		25230-038
42	47	2145	553	800	25230-003	**27230-066**	25230-012	**27230-065**	25230-037
43	47	2145	553	900	25230-043		25230-045		25230-141
44	47	2145	553	1000	25230-044		25230-046		25230-142

Cabinets – Novastar Service Plus

FAN TOP COVERS, LIFTING EYE, THERMOSTAT, SPEED CONTROLLER

					Fan top cover (fan height 25 mm)		Fan top cover (fan height 38 mm)		Lifting eye	Thermostat	Speed control
					Fan top cover with fans	Fan 84 ... 90 m³	Fan top cover with fans	Fan 162 ... 172 m³			
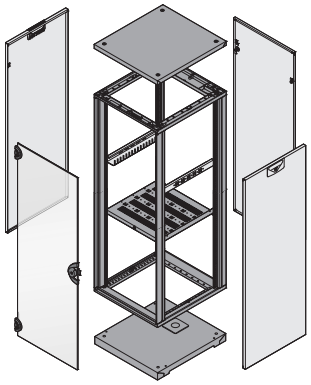					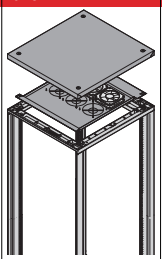 07011082	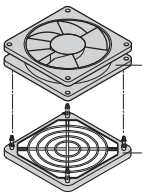 kta44844	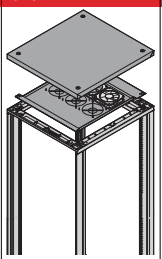 07011082	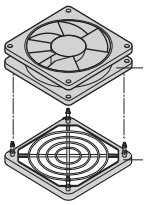 kta44844	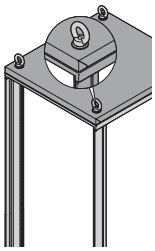 07011072	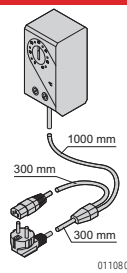 01108052	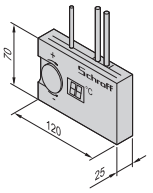 01105055
					St, RAL 7021, incl. GND/earthing and cabling; 2 fans for 500 mm depth, 4 cover caps; 3 fans for 600/ 800 mm depth, 3 cover caps; 0.5 m connector cable, IEC C14 plug	axial fan with protective grille, 230 V_{AC}, 8 W, 84 ... 90 m³/h 29 ... 30 dB(A), height 25 mm; please order separately if additional fans are required	St, RAL 7021, incl. GND/earthing and cabling; 2 fans for 500 mm depth, 1 cover cap; 3 fans for 600/ 800 mm depth, 3 cover caps; 0.5 m connector cable, IEC C14 plug	axial fan with protective grille, 230 V_{AC}, 15 W, 162 ... 172 m³/h, 37 ... 41 dB(A), height 38 mm; please order separately if additional fans are required	for raised cover or fan top cover; M12, application an d load to DIN 582	with mains cable 230 V_{AC} (SCHUKO/ UTE plug/ IEC 60320 C13 socket), adjustment range 0 ... 60°C	fully wired, 90 ... 264 V_{AC}, input IEC 60320 C13 plug, outlet IEC 60320 C13 socket; external NTC sensor 1.5 m Please order the connection cables separatly
	Cabinet dimensions										
	Height		Width	Depth	PU 1 kit	1 piece	PU 1 kit	1 piece	PU 4 pieces	1 piece	1 piece
No.	U	mm	mm	mm	assembled	assembled	assembled	assembled	assembled	assembled	assembled
1	6	357	553	500	27230-081	27230-077	27230-085	27230-078	**27230-065**	**24630-119**	**60118-616**
2	6	357	553	600	27230-082		27230-086				
3	9	456	553	500	27230-081	27230-077	27230-085	27230-078	**27230-065**	**24630-119**	**60118-616**
4	9	456	553	600	27230-082		27230-086				
5	12	589	553	500	27230-081	27230-077	27230-085	27230-078	**27230-065**	**24630-119**	**60118-616**
6	12	589	553	600	27230-082		27230-086				
7	12	589	553	800	27230-083		27230-087				
8	12	589	553	900	27230-094		27230-096				
9	12	589	553	1000	27230-095		27230-097				
10	16	767	553	500	27230-081	27230-077	27230-085	27230-078	**27230-065**	**24630-119**	**60118-616**
11	16	767	553	600	27230-082		27230-086				
12	16	767	553	800	27230-083		27230-087				
13	16	767	553	900	27230-094		27230-096				
14	16	767	553	1000	27230-095		27230-097				
15	20	945	553	500	27230-081	27230-077	27230-085	27230-078	**27230-065**	**24630-119**	**60118-616**
16	20	945	553	600	27230-082		27230-086				
17	20	945	553	800	27230-083		27230-087				
18	20	945	553	900	27230-094		27230-096				
19	20	945	553	1000	27230-095		27230-097				
20	25	1167	553	500	27230-081	27230-077	27230-085	27230-078	**27230-065**	**24630-119**	**60118-616**
21	25	1167	553	600	27230-082		27230-086				
22	25	1167	553	800	27230-083		27230-087				
23	25	1167	553	900	27230-094		27230-096				
24	25	1167	553	1000	27230-095		27230-097				
25	34	1567	553	500	27230-081	27230-077	27230-085	27230-078	**27230-065**	**24630-119**	**60118-616**
26	34	1567	553	600	27230-082		27230-086				
27	34	1567	553	800	27230-083		27230-087				
28	34	1567	553	900	27230-094		27230-096				
29	34	1567	553	1000	27230-095		27230-097				
30	38	1745	553	500	27230-081	27230-077	27230-085	27230-078	**27230-065**	**24630-119**	**60118-616**
31	38	1745	553	600	27230-082		27230-086				
32	38	1745	553	800	27230-083		27230-087				
33	38	1745	553	900	27230-094		27230-096				
34	38	1745	553	1000	27230-095		27230-097				
35	43	1967	553	500	27230-081	27230-077	27230-085	27230-078	**27230-065**	**24630-119**	**60118-616**
36	43	1967	553	600	27230-082		27230-086				
37	43	1967	553	800	27230-083		27230-087				
38	43	1967	553	900	27230-094		27230-096				
39	43	1967	553	1000	27230-095		27230-097				
40	47	2145	553	500	27230-081	27230-077	27230-085	27230-078	**27230-065**	**24630-119**	**60118-616**
41	47	2145	553	600	27230-082		27230-086				
42	47	2145	553	800	27230-083		27230-087				
43	47	2145	553	900	27230-094		27230-096				
44	47	2145	553	1000	27230-095		27230-097				

Part number in bold face type: ready for despatch within 2 working days
Part number in normal type: ready for despatch within 10 working days

Cabinets – Novastar Service Plus

FLOORS

					Base plates					Base plate, reinforced, with cable ducting	
					Base plate, rear open	Cover plate	Cover plate Perforated	Cover plate Filter mat	Brush strip	Base plate	Brush strip
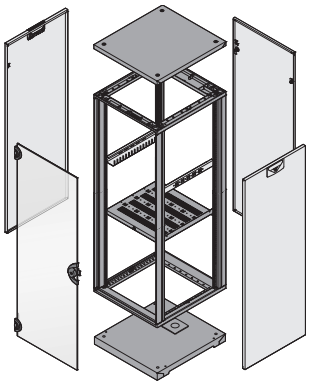					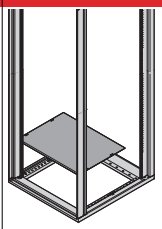 07011073 St, 1.5 mm, RAL 7021, incl. GND/ earthing; cable ducting in rear area of cabinet; please order cover or brush strip separately	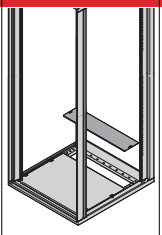 07011073 St, 1.5 mm, 485 x 92 mm; to cover the rear floor opening	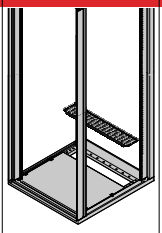 07016052 St, 1.5 mm, 485 x 92 mm; to cover the rear floor opening	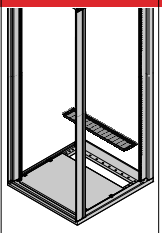 07016052 St, 1 mm, 485 x 92 mm; to cover the rear floor opening	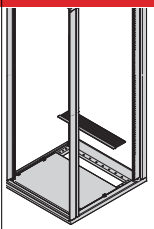 07011073 Nylon, black, 440 x 98 mm; to cover the rear floor opening	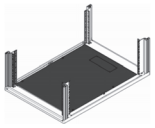 07016059 St, 1.5 mm, RAL 7021; fully closed with pre-cut area for cable ducting opening, width 370 mm, depth 50 mm	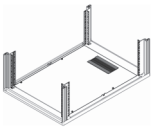 07016060 Nylon, black, width 370 mm, depth 50 mm; for covering the rear floor opening
	Cabinet dimensions										
	Height		Width	Depth	1 piece	1 piece	1 piece	1 piece	1 piece	1 piece	1 piece
No.	U	mm	mm	mm	assembled	assembled	assembled	assembled	assembled	assembled	montiert
1	6	357	553	500	27230-188	**27230-114**	**27230-254**	**27230-255**	**27230-079**	25230-149	27230-055
2	6	357	553	600	27230-189					25230-150	
3	9	456	553	500	27230-188	**27230-114**	**27230-254**	**27230-255**	**27230-079**	25230-149	27230-055
4	9	456	553	600	27230-189					25230-150	
5	12	589	553	500	27230-188					25230-149	
6	12	589	553	600	27230-189					25230-150	
7	12	589	553	800	27230-190	**27230-114**	**27230-254**	**27230-255**	**27230-079**	25230-151	27230-055
8	12	589	553	900	27230-191					25230-152	
9	12	589	553	1000	27230-192					25230-153	
10	16	767	553	500	27230-188					25230-149	
11	16	767	553	600	27230-189					25230-150	
12	16	767	553	800	27230-190	**27230-114**	**27230-254**	**27230-255**	**27230-079**	25230-151	27230-055
13	16	767	553	900	27230-191					25230-152	
14	16	767	553	1000	27230-192					25230-153	
15	20	945	553	500	27230-188					25230-149	
16	20	945	553	600	27230-189					25230-150	
17	20	945	553	800	27230-190	**27230-114**	**27230-254**	**27230-255**	**27230-079**	25230-151	27230-055
18	20	945	553	900	27230-191					25230-152	
19	20	945	553	1000	27230-192					25230-153	
20	25	1167	553	500	27230-188					25230-149	
21	25	1167	553	600	27230-189					25230-150	
22	25	1167	553	800	27230-190	**27230-114**	**27230-254**	**27230-255**	**27230-079**	25230-151	27230-055
23	25	1167	553	900	27230-191					25230-152	
24	25	1167	553	1000	27230-192					25230-153	
25	34	1567	553	500	27230-188					25230-149	
26	34	1567	553	600	27230-189					25230-150	
27	34	1567	553	800	27230-190	**27230-114**	**27230-254**	**27230-255**	**27230-079**	25230-151	27230-055
28	34	1567	553	900	27230-191					25230-152	
29	34	1567	553	1000	27230-192					25230-153	
30	38	1745	553	500	27230-188					25230-149	
31	38	1745	553	600	27230-189					25230-150	
32	38	1745	553	800	27230-190	**27230-114**	**27230-254**	**27230-255**	**27230-079**	25230-151	27230-055
33	38	1745	553	900	27230-191					25230-152	
34	38	1745	553	1000	27230-192					25230-153	
35	43	1967	553	500	27230-188					25230-149	
36	43	1967	553	600	27230-189					25230-150	
37	43	1967	553	800	27230-190	**27230-114**	**27230-254**	**27230-255**	**27230-079**	25230-151	27230-055
38	43	1967	553	900	27230-191					25230-152	
39	43	1967	553	1000	27230-192					25230-153	
40	47	2145	553	500	27230-188					25230-149	
41	47	2145	553	600	27230-189					25230-150	
42	47	2145	553	800	27230-190	**27230-114**	**27230-254**	**27230-255**	**27230-079**	25230-151	27230-055
43	47	2145	553	900	27230-191					25230-152	
44	47	2145	553	1000	27230-192					25230-153	

Cabinets – Novastar Service Plus

BASE/PLINTH

					Bases/plinths		Mobile bases/ plinths
					With cable ducting	Brush strip	
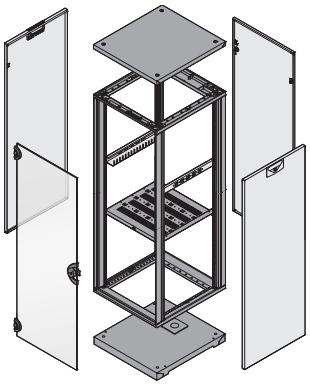					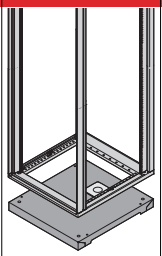 07011075	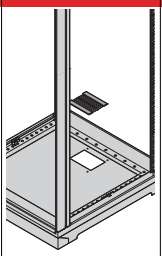 07011077	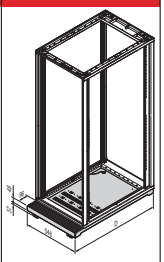 07011113
					St, 1.5 mm, RAL 7021, height 55 mm; incl. GND/earthing; cable ducting 110 x 76 mm; adjustable feet, adjustable height range 57 mm ... 67 mm	Nylon, black, 110 mm x 76 mm; to cover cable through-ducting opening	St, 2 mm, fine-grooved mat, 3 mm, 4 castors, load-carrying capacity 200 kg
	Cabinet dimensions						
	Height		Width	Depth	1 piece	1 piece	1 piece
No.	U	mm	mm	mm	assembled	assembled	assembled
1	6	357	553	500	**27230-070**	**27230-111**	**27230-146**
2	6	357	553	600	**27230-071**		**27230-147**
3	9	456	553	500	**27230-070**	**27230-111**	**27230-146**
4	9	456	553	600	**27230-071**		**27230-147**
5	12	589	553	500	**27230-070**		**27230-146**
6	12	589	553	600	**27230-071**		**27230-147**
7	12	589	553	800	**27230-072**	**27230-111**	**27230-148**
8	12	589	553	900	27230-076		–
9	12	589	553	1000	27230-080		–
10	16	767	553	500	**27230-070**		**27230-146**
11	16	767	553	600	**27230-071**		**27230-147**
12	16	767	553	800	**27230-072**	**27230-111**	**27230-148**
13	16	767	553	900	27230-076		–
14	16	767	553	1000	27230-080		–
15	20	945	553	500	**27230-070**		**27230-146**
16	20	945	553	600	**27230-071**		**27230-147**
17	20	945	553	800	**27230-072**	**27230-111**	**27230-148**
18	20	945	553	900	27230-076		–
19	20	945	553	1000	27230-080		–
20	25	1167	553	500	**27230-070**		**27230-146**
21	25	1167	553	600	**27230-071**		**27230-147**
22	25	1167	553	800	**27230-072**	**27230-111**	**27230-148**
23	25	1167	553	900	27230-076		–
24	25	1167	553	1000	27230-080		–
25	34	1567	553	500	**27230-070**		**27230-146**
26	34	1567	553	600	**27230-071**		**27230-147**
27	34	1567	553	800	**27230-072**	**27230-111**	**27230-148**
28	34	1567	553	900	27230-076		–
29	34	1567	553	1000	27230-080		–
30	38	1745	553	500	**27230-070**		**27230-146**
31	38	1745	553	600	**27230-071**		**27230-147**
32	38	1745	553	800	**27230-072**	**27230-111**	**27230-148**
33	38	1745	553	900	27230-076		–
34	38	1745	553	1000	27230-080		–
35	43	1967	553	500	**27230-070**		**27230-146**
36	43	1967	553	600	**27230-071**		**27230-147**
37	43	1967	553	800	**27230-072**	**27230-111**	**27230-148**
38	43	1967	553	900	27230-076		–
39	43	1967	553	1000	27230-080		–
40	47	2145	553	500	**27230-070**		**27230-146**
41	47	2145	553	600	**27230-071**		**27230-147**
42	47	2145	553	800	**27230-072**	**27230-111**	**27230-148**
43	47	2145	553	900	27230-076		–
44	47	2145	553	1000	27230-080		–

Part number in bold face type: ready for despatch within 2 working days
Part number in normal type: ready for despatch within 10 working days

Cabinets – Novastar Service Plus

19" PANEL/SLIDE MOUNTS, DEPTH MEMBERS, SHELVES

					Depth members	19" panel/slide mounts	19" plane for universal upright	
							3 U	4 U
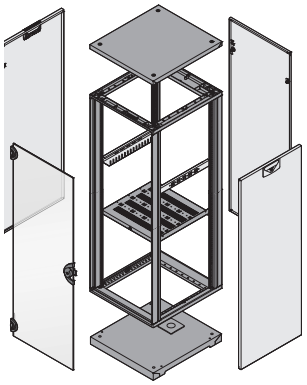					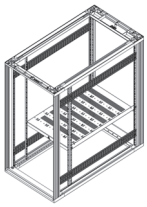 07011114 St, 1.5 mm, finish AlZn; for mounting 19" pitch profiles	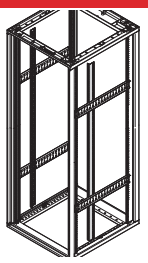 07011111 19" panel/slide mounts with universal perforation grid (EIA)	 07016070 St, 2 mm, RAL 7021	 07011114
	Cabinet dimensions							
	Height		Width	Depth				
No.	U	mm	mm	mm	PU 2 pieces assembled	PU 2 pieces assembled	PU 2 pieces assembled	PU 2 pieces assembled
1	6	357	553	500	27230-167	27230-172	27230-162	27230-163
2	6	357	553	600	27230-168			
3	9	456	553	500	27230-167	27230-173	27230-162	27230-163
4	9	456	553	600	27230-168			
5	12	589	553	500	27230-167	27230-174	27230-162	27230-163
6	12	589	553	600	27230-168			
7	12	589	553	800	27230-169			
8	12	589	553	900	27230-170			
9	12	589	553	1000	27230-171			
10	16	767	553	500	27230-167	27230-175	27230-162	27230-163
11	16	767	553	600	27230-168			
12	16	767	553	800	27230-169			
13	16	767	553	900	27230-170			
14	16	767	553	1000	27230-171			
15	20	945	553	500	27230-167	27230-176	27230-162	27230-163
16	20	945	553	600	27230-168			
17	20	945	553	800	27230-169			
18	20	945	553	900	27230-170			
19	20	945	553	1000	27230-171			
20	25	1167	553	500	27230-167	27230-177	27230-162	27230-163
21	25	1167	553	600	27230-168			
22	25	1167	553	800	27230-169			
23	25	1167	553	900	27230-170			
24	25	1167	553	1000	27230-171			
25	34	1567	553	500	27230-167	27230-178	27230-162	27230-163
26	34	1567	553	600	27230-168			
27	34	1567	553	800	27230-169			
28	34	1567	553	900	27230-170			
29	34	1567	553	1000	27230-171			
30	38	1745	553	500	27230-167	27230-179	27230-162	27230-163
31	38	1745	553	600	27230-168			
32	38	1745	553	800	27230-169			
33	38	1745	553	900	27230-170			
34	38	1745	553	1000	27230-171			
35	43	1967	553	500	27230-167	27230-180	27230-162	27230-163
36	43	1967	553	600	27230-168			
37	43	1967	553	800	27230-169			
38	43	1967	553	900	27230-170			
39	43	1967	553	1000	27230-171			
40	47	2145	553	500	27230-167	27230-181	27230-162	27230-163
41	47	2145	553	600	27230-168			
42	47	2145	553	800	27230-169			
43	47	2145	553	900	27230-170			
44	47	2145	553	1000	27230-171			

Cabinets – Novastar Service Plus

SHELVES

					Stationary shelf	Shelf, stationary for server	Telescopic shelf, 2 U, 70 kg			
							Full depth	Shortened by 100 mm	T-bar lock	GND/earthing
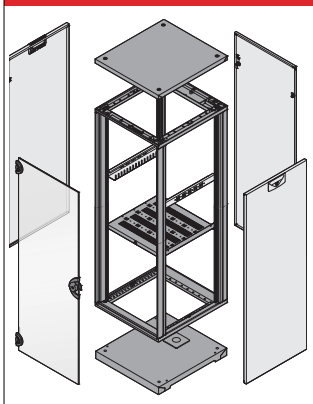					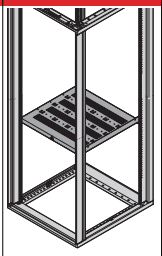 07011077	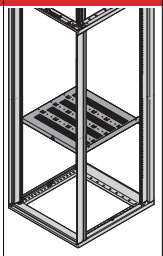 07011077	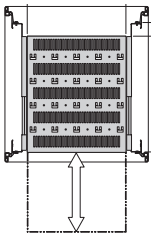 07011101	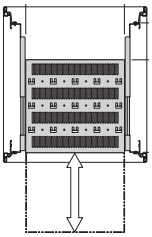 07011102	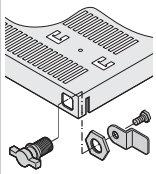 01004125	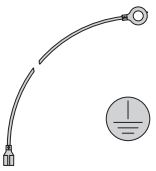 aza43284
					St, 1.5 mm, RAL 7021, with perforation, static load-carrying capacity 75 kg	St, 1.5 mm, RAL 7021, with perforation, static load-carrying capacity 75 kg	St, 1.5 mm, RAL 7021, static load-carrying capacity when fully extended 70 kg, incl. telescopic slide; please order T-bar lock and GND/earthing kit separately		to lock the telescopic shelf	for telescopic shelf
	Cabinet dimensions									
	Height		Width	Depth	1 piece	1 piece	1 piece	1 piece	1 piece	PU 1 kit
No.	U	mm	mm	mm	assembled	assembled	assembled	assembled	assembled	assembled
1	6	357	553	500	**27230-051**	–	**21130-357**	21130-358	**23130-092**	**21120-189**
2	6	357	553	600	**27230-052**	–	**21130-353**	**21130-352**		
3	9	456	553	500	**27230-051**	–	**21130-357**	21130-358	**23130-092**	**21120-189**
4	9	456	553	600	**27230-052**	–	**21130-353**	**21130-352**		
5	12	589	553	500	**27230-051**	–	**21130-357**	21130-358		
6	12	589	553	600	**27230-052**	–	**21130-353**	**21130-352**		
7	12	589	553	800	**27230-053**	–	**21130-355**	**21130-354**	**23130-092**	**21120-189**
8	12	589	553	900	27230-088	27230-165	27230-108	–		
9	12	589	553	1000	27230-089	27230-165	27230-109	–		
10	16	767	553	500	**27230-051**	–	**21130-357**	21130-358		
11	16	767	553	600	**27230-052**	–	**21130-353**	**21130-352**		
12	16	767	553	800	**27230-053**	–	**21130-355**	**21130-354**	**23130-092**	**21120-189**
13	16	767	553	900	27230-088	27230-165	27230-108	–		
14	16	767	553	1000	27230-089	27230-165	27230-109	–		
15	20	945	553	500	**27230-051**	–	**21130-357**	21130-358		
16	20	945	553	600	**27230-052**	–	**21130-353**	**21130-352**		
17	20	945	553	800	**27230-053**	–	**21130-355**	**21130-354**	**23130-092**	**21120-189**
18	20	945	553	900	27230-088	27230-165	27230-108	–		
19	20	945	553	1000	27230-089	27230-165	27230-109	–		
20	25	1167	553	500	**27230-051**	–	**21130-357**	21130-358		
21	25	1167	553	600	**27230-052**	–	**21130-353**	**21130-352**		
22	25	1167	553	800	**27230-053**	–	**21130-355**	**21130-354**	**23130-092**	**21120-189**
23	25	1167	553	900	27230-088	27230-165	27230-108	–		
24	25	1167	553	1000	27230-089	27230-165	27230-109	–		
25	34	1567	553	500	**27230-051**	–	**21130-357**	21130-358		
26	34	1567	553	600	**27230-052**	–	**21130-353**	**21130-352**		
27	34	1567	553	800	**27230-053**	–	**21130-355**	**21130-354**	**23130-092**	**21120-189**
28	34	1567	553	900	27230-088	27230-165	27230-108	–		
29	34	1567	553	1000	27230-089	27230-165	27230-109	–		
30	38	1745	553	500	**27230-051**	–	**21130-357**	21130-358		
31	38	1745	553	600	**27230-052**	–	**21130-353**	**21130-352**		
32	38	1745	553	800	**27230-053**	–	**21130-355**	**21130-354**	**23130-092**	**21120-189**
33	38	1745	553	900	27230-088	27230-165	27230-108	–		
34	38	1745	553	1000	27230-089	27230-165	27230-109	–		
35	43	1967	553	500	**27230-051**	–	**21130-357**	21130-358		
36	43	1967	553	600	**27230-052**	–	**21130-353**	**21130-352**		
37	43	1967	553	800	**27230-053**	–	**21130-355**	**21130-354**	**23130-092**	**21120-189**
38	43	1967	553	900	27230-088	27230-165	27230-108	–		
39	43	1967	553	1000	27230-089	27230-165	27230-109	–		
40	47	2145	553	500	**27230-051**	–	**21130-357**	21130-358		
41	47	2145	553	600	**27230-052**	–	**21130-353**	**21130-352**		
42	47	2145	553	800	**27230-053**	–	**21130-355**	**21130-354**	**23130-092**	**21120-189**
43	47	2145	553	900	27230-088	27230-165	27230-108	–		
44	47	2145	553	1000	27230-089	27230-165	27230-109	–		

Part number in bold face type: ready for despatch within 2 working days
Part number in normal type: ready for despatch within 10 working days

Cabinets – Novastar Service Plus

SLIDE RAILS

					Slide rail			
					Slide rail	Heavy-load slide rail	Heavy-load slide rail for server	Short slide rail
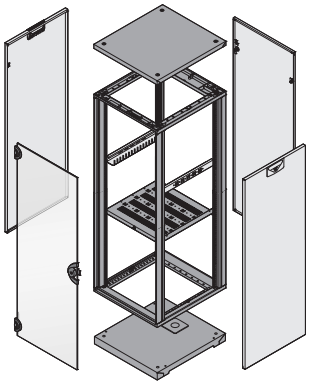					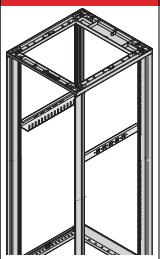 07011078 St, 1.5 mm, finish AlZn, static load-carrying capacity 25 kg/pair	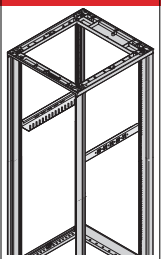 07011078 St, 1.5 mm, finish AlZn, static load-carrying capacity 50 kg/pair	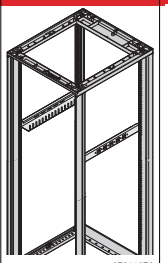 07011078	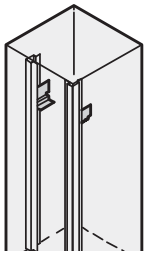 ERA46348 St, 1.5 mm, finish AlZn, carrying capacity 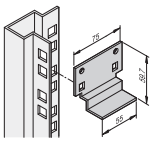 sc96xxxx static load-15 kg/pair
	Cabinet dimensions								
	Height		Width	Depth	PU 2 pieces	PU 2 pieces	PU 2 pieces	PU 2 pieces	PU 10 pieces
No.	U	mm	mm	mm	assembled	assembled	assembled	enclosed loose	enclosed loose
1	6	357	553	500	**27230-102**	25230-013	–	27230-184	27230-185
2	6	357	553	600	**27230-103**	25230-014	–		
3	9	456	553	500	**27230-102**	25230-013	–	27230-184	27230-185
4	9	456	553	600	**27230-103**	25230-014	–		
5	12	589	553	500	**27230-102**	25230-013	–	27230-184	27230-185
6	12	589	553	600	**27230-103**	25230-014	–		
7	12	589	553	800	**27230-104**	25230-015	–		
8	12	589	553	900	27230-105	25230-145	25230-148		
9	12	589	553	1000	27230-106	25230-146	25230-148		
10	16	767	553	500	**27230-102**	25230-013	–	27230-184	27230-185
11	16	767	553	600	**27230-103**	25230-014	–		
12	16	767	553	800	**27230-104**	25230-015	–		
13	16	767	553	900	27230-105	25230-145	25230-148		
14	16	767	553	1000	27230-106	25230-146	25230-148		
15	20	945	553	500	**27230-102**	25230-013	–	27230-184	27230-185
16	20	945	553	600	**27230-103**	25230-014	–		
17	20	945	553	800	**27230-104**	25230-015	–		
18	20	945	553	900	27230-105	25230-145	25230-148		
19	20	945	553	1000	27230-106	25230-146	25230-148		
20	25	1167	553	500	**27230-102**	25230-013	–	27230-184	27230-185
21	25	1167	553	600	**27230-103**	25230-014	–		
22	25	1167	553	800	**27230-104**	25230-015	–		
23	25	1167	553	900	27230-105	25230-145	25230-148		
24	25	1167	553	1000	27230-106	25230-146	25230-148		
25	34	1567	553	500	**27230-102**	25230-013	–	27230-184	27230-185
26	34	1567	553	600	**27230-103**	25230-014	–		
27	34	1567	553	800	**27230-104**	25230-015	–		
28	34	1567	553	900	27230-105	25230-145	25230-148		
29	34	1567	553	1000	27230-106	25230-146	25230-148		
30	38	1745	553	500	**27230-102**	25230-013	–	27230-184	27230-185
31	38	1745	553	600	**27230-103**	25230-014	–		
32	38	1745	553	800	**27230-104**	25230-015	–		
33	38	1745	553	900	27230-105	25230-145	25230-148		
34	38	1745	553	1000	27230-106	25230-146	25230-148		
35	43	1967	553	500	**27230-102**	25230-013	–	27230-184	27230-185
36	43	1967	553	600	**27230-103**	25230-014	–		
37	43	1967	553	800	**27230-104**	25230-015	–		
38	43	1967	553	900	27230-105	25230-145	25230-148		
39	43	1967	553	1000	27230-106	25230-146	25230-148		
40	47	2145	553	500	**27230-102**	25230-013	–	27230-184	27230-185
41	47	2145	553	600	**27230-103**	25230-014	–		
42	47	2145	553	800	**27230-104**	25230-015	–		
43	47	2145	553	900	27230-105	25230-145	25230-148		
44	47	2145	553	1000	27230-106	25230-146	25230-148		

Cabinets – Novastar Service Plus

CABLE TIES, VELCRO-TYPE TAPE

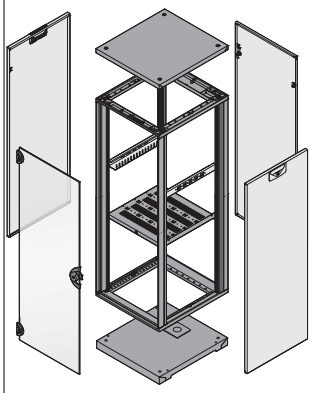

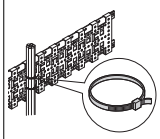

01005078

plastic,
92 mm x 2.5 mm;

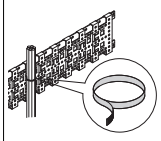

01005079

black,
length 300 mm,

No.	Cabinet dimensions Height U	Height mm	Width mm	Depth mm	Cable tie PU 25 pieces supplied loose	Velcro PU 10 pieces supplied loose
1	6	357	553	500	**20118-351**	**20118-624**
2	6	357	553	600		
3	9	456	553	500	**20118-351**	**20118-624**
4	9	456	553	600		
5	12	589	553	500		
6	12	589	553	600		
7	12	589	553	800	**20118-351**	**20118-624**
8	12	589	553	900		
9	12	589	553	1000		
10	16	767	553	500		
11	16	767	553	600		
12	16	767	553	800	**20118-351**	**20118-624**
13	16	767	553	900		
14	16	767	553	1000		
15	20	945	553	500		
16	20	945	553	600		
17	20	945	553	800	**20118-351**	**20118-624**
18	20	945	553	900		
19	20	945	553	1000		
20	25	1167	553	500		
21	25	1167	553	600		
22	25	1167	553	800	**20118-351**	**20118-624**
23	25	1167	553	900		
24	25	1167	553	1000		
25	34	1567	553	500		
26	34	1567	553	600		
27	34	1567	553	800	**20118-351**	**20118-624**
28	34	1567	553	900		
29	34	1567	553	1000		
30	38	1745	553	500		
31	38	1745	553	600		
32	38	1745	553	800	**20118-351**	**20118-624**
33	38	1745	553	900		
34	38	1745	553	1000		
35	43	1967	553	500		
36	43	1967	553	600		
37	43	1967	553	800	**20118-351**	**20118-624**
38	43	1967	553	900		
39	43	1967	553	1000		
40	47	2145	553	500		
41	47	2145	553	600		
42	47	2145	553	800	**20118-351**	**20118-624**
43	47	2145	553	900		
44	47	2145	553	1000		

General components

Mechanics



from page 3.2

Electrics





from page 3.30

Power distribution





from page 3.35

Climate control



from page 4.0

Part number in bold face type: ready for despatch within 2 working days
Part number in normal type: ready for despatch within 10 working days

North America

Warwick, RI, USA
Tel +1.401.738.1722
San Diego, CA, USA
Tel +1.858.740.2400

Europe, Middle East & India

Straubenhardt, Germany
Tel +49 7082 794 0
Betschdorf, France
Tel +33 3 88 90 64 90
Warsaw, Poland
Tel +48 22 209 98 35
Hemel Hempstead,
Great Britain
Tel +44 1442 24 04 71
Lainate, Italy
Tel +39 02 932 714 1
Dubai, United Arab Emirates
Tel +971 4 82 38 666
Bangalore, India
Tel +91 80 6715 8900
Istanbul, Turkey
Tel +90 541 368 0941

Asia Pacific

Shanghai, China
Tel +86 21 2412 6943
Singapore
Tel +65 6768 5800
Shin-Yokohama, Japan
Tel +81 45 476 0271

Our powerful portfolio of brands:

CADDY ERICO HOFFMAN RAYCHEM SCHROFF TRACER

nVent

nVent.com/SCHROFF

©2018 nVent. All nVent marks and logos are owned or licensed by nVent Services GmbH or its affiliates. All other trademarks are the property of their respective owners.
nVent reserves the right to change specifications without notice.