KSC2 Series

Sealed Tactile Switch for SMT 6.2 x 6.2 mm, with 3.5mm Height Soft Actuator



Description

The KSC2 series of sealed tactile switches for SMT are IP67 rated, 3.5mm high momentary action tactile switches, featuring a soft actuator. The switches are available with a variety of operating forces and in a range of electrical lifespans, depending on model. The KSC2 series are designed to give users a positive adaptable tactile feeling, perfect for consumer-facing applications.

Features & Benefits

- Electrical Height for easier integration due to more precise tolerances
- Soft actuator 3.5mm high
- IP67
- Compatible with lead free reflow soldering process of SMT devices
- Low halogen, RoHS and REACH compliant

Applications

- Industrial electronics
- Consumer products
- Transportation
- Medical

Specifications

Function	Momentary action
Contact Arrangement	1 make contact = SPST, N.O.
Terminals	J bend & Gullwing type for SMT
Sealing	IP67

Electrical Characteristics

Dielectric Strength (50 Hz, 1 min.)	≥ 250 Vrms	
Contact Resistance	≤ 100mΩ	
Insulation Resistance (100 V)	≥ 1000 M Ω	
Bounce Time	≤ 1 ms	
	Silver	**Gold**
Maximum Power	1 VA	0.2 VA
Maximum Voltage	32 VDC	32 VDC
Minimum Voltage	20 mV	20 mV
Maximum Current	50 mA	10 mA
Minimum Current	1 mA[1]	0.1 mA

Note:
1. Ultra low current with 10 µA - 1 VDC version is available upon request

Environmental Characteristics

	Silver	**Gold**
Operating Temperature	-40°C to 85°C	-40°C to 125°C
Storage Temperature	-55°C to 85°C	-55°C to 125°C

Dimensions (mm) J Termination

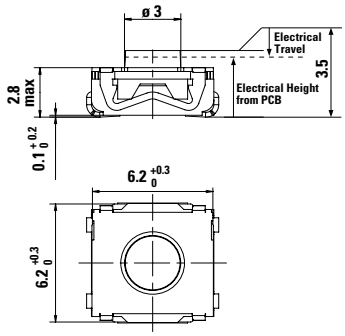

Dimensions (mm) G Termination

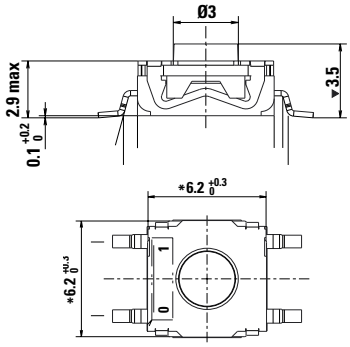

J Terminations (mm)

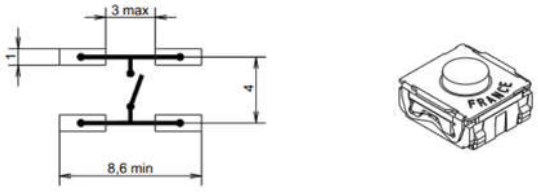

G Terminations (mm)

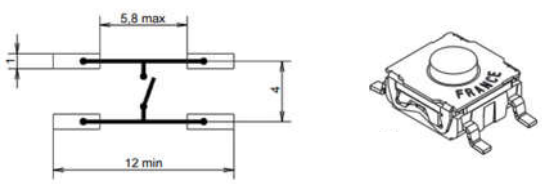

© 2026 Littelfuse, Inc.
Specifications are subject to change without notice.
Revised: VL 01/23/26

KSC2 Series

Sealed Tactile Switch for SMT 6.2 x 6.2 mm, with 3.5mm Height Soft Actuator

Soldering Profile

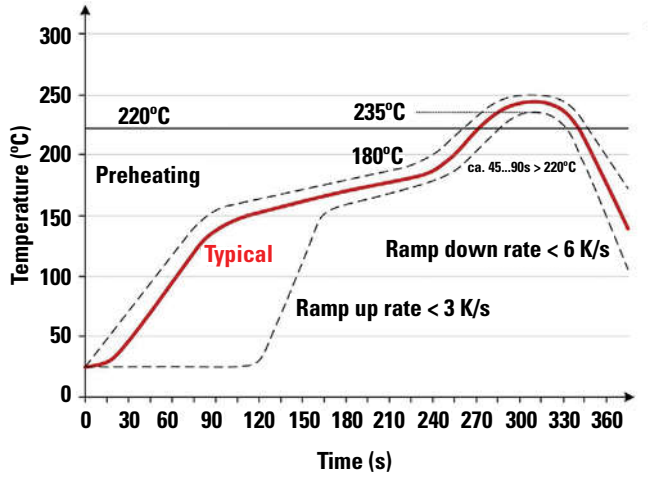

Note: Up to 2 reflow cycles in accordance with the above temperature profile

Soldering process: Depending on the application, this component is suited to the following methods:

- Terminals being silver or gold plated over a nickel barrier, the use of slightly activated flux is suitable.
- Lead free soldering process in accordance with the definition on the left.

Tape & Reel

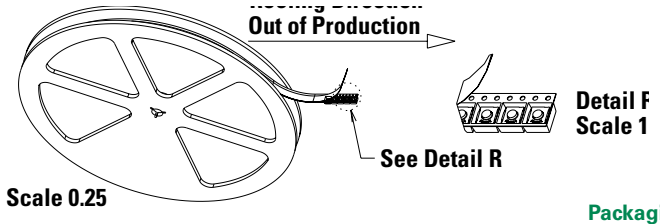

Packaging Details

Type	Tape & reel
Number of Parts in Packaging	2,000
Other Information	Tape and reel per EIA 481
Transport Conditions	According to specification NF H00-060

Packaging (mm)

J version

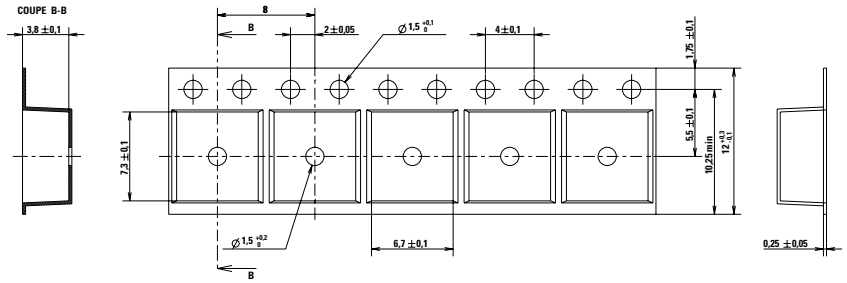

G version

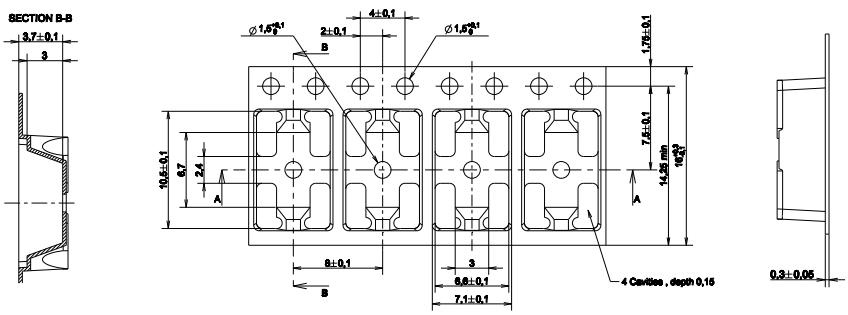

© 2026 Littelfuse, Inc.
Specifications are subject to change without notice.
Revised: VL 01/23/26

KSC2 Series

Sealed Tactile Switch for SMT 6.2 x 6.2 mm, with 3.5mm Height Soft Actuator

Ordering Number

Our easy build-a-switch concept allows you to mix and match options to create the switch you need. To order, select desired option from each category. However, please note that not all combinations of these options are feasible. For any part number different from those listed below, please consult your local representative.

KSC2 - x - x - x - x - x

Operating Force
0: 1.6 N (160 grams)
2: 2 N (200 grams)
4: 3.5 N (350 grams)
5: 5.5 N (550 grams)

Contact Material
1: Silver
2: Silver long life
3: Gold
4: Gold long life

Termination
J: J Bend
G: Gullwing

Tactile Ratio
NONE: Standard version
SP DELTA: Special delta version = higher tactile ratio

LFS: Lead free compatible, silver plated
LFG: Lead free compatible, gold plated

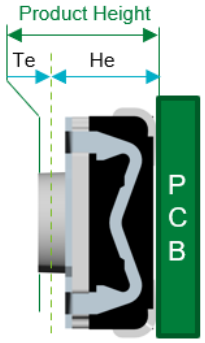

Te : Electrical Travel
He : Electrical Height

Mechanical Characteristics

Terminal G version

Supply Status	Littelfuse Orderable Part Number	Description	Contact & Terminals Plating	Terminals	Operating Force Fa (Newtons)	Tactile ratio (min)	Operating Life (operations)	Electrical Travel (mm)
✓	Y31B01136FPLFS	KSC201G LFS	Silver	G	1.6±0.6	Min 10%	5,000,000	0.3±0.2
✓	Y31B11136FPLFS	KSC221G LFS	Silver	G	2.25±0.55	Min 10%	500,000	0.35+0.25/-0.15
✓	Y31B12136FPLFS	KSC222G LFS	Silver	G	2.25±0.55	Min 10%	1,000,000	0.35+0.25/-0.15
✓	Y31B13136FPLFG	KSC223G LFG	Gold	G	2.25±0.55	Min 10%	500,000	0.35+0.25/-0.15
✓	Y31B41136FPLFS	KSC241G LFS	Silver	G	3.5±0.9	Min 15%	300,000	0.5±0.2
✓	Y31B42136FPLFS	KSC242G LFS	Silver	G	3.5±0.9	Min 15%	1,000,000	0.5±0.2
✓	Y31B43136FPLFG	KSC243G LFG	Gold	G	3.8±1	Min 15%	300,000	0.5±0.2
✓	Y31B52136FPLFS	KSC252G LFS	Silver	G	6±1.5	Min 15%	1,000,000	0.6±0.2
✓	Y31B53136FPLFG	KSC253G LFG	Gold	G	5.55±1.45	Min 15%	300,000	0.5±0.2

© 2026 Littelfuse, Inc.
Specifications are subject to change without notice.
Revised: VL 01/23/26

KSC2 Series

Sealed Tactile Switch for SMT 6.2 x 6.2 mm, with 3.5mm Height Soft Actuator

Special Delta Version

Supply Status	Littelfuse Orderable Part Number	Description	Contact & Terminals Plating	Terminals	Operating Force Fa (Newtons)	Tactile ratio (min)	Operating Life (operations)	Electrical Travel (mm)
✓	Y31B31136FPLFS	KSC231G SP DELTA LFS	Silver	G	3.5±0.9	Min 25%	300,000	0.5±0.2
✓	Y31B41138FPLFS	KSC241G SP DELTA LFS	Silver	G	3.55±0.9	Min 30%	300,000	0.5±0.2
✓	Y31B44138FPLFG	KSC244G SP DELTA LFG	Gold	G	3.55±0.9	Min 30%	800,000	0.5±0.2

Terminal J version

Supply Status	Littelfuse Orderable Part Number	Description	Contact & Terminals Plating	Terminals	Operating Force Fa (Newtons)	Tactile ratio (min)	Operating Life (operations)	Electrical Travel (mm) (for information only)	Electrical Height from PCB (mm)
✓	Y31B01132FPLFS	KSC201J LFS	Silver	J	1.6±0.6	Min 10%	5,000,000	0.3	3.35±0.2
✓	Y31B11132FPLFS	KSC221J LFS	Silver	J	2.25±0.55	Min 10%	500,000	0.25	3.25±0.2
✓	Y31B12132FPLFS	KSC222J LFS	Silver	J	2.25±0.55	Min 10%	1,000,000	0.35	3.25±0.2
✓	Y31B13132FPLFG	KSC223J LFG	Gold	J	2.25±0.55	Min 10%	500,000	0.25	3.25±0.2
✓	Y31B41132FPLFS	KSC241J LFS	Silver	J	3.5±0.9	Min 15%	300,000	0.5	3±0.2
✓	Y31B42132FPLFS	KSC242J LFS	Silver	J	3.5±0.9	Min 15%	1,000,000	0.5	3±0.2
✓	Y31B43132FPLFG	KSC243J LFG	Gold	J	3.8±1	Min 15%	300,000	0.5	3±0.2
✓	Y31B51132FPLFS	KSC251J LFS	Silver	J	5.55±1.45	Min 15%	300,000	0.5	2.95±0.2
✓	Y31B52132FPLFS	KSC252J LFS	Silver	J	6±1.5	Min 15%	1,000,000	0.55	2.95±0.2
✓	Y31B53132FPLFG	KSC253J LFG	Gold	J	5.55±1.45	Min 15%	300,000	0.55	2.95±0.2
✓	Y31B54132FPLFG	KSC254J LFG	Gold	J	6±1.5	Min 15%	1,000,000	0.55	2.95±0.2

Special Delta Version

Supply Status	Littelfuse Orderable Part Number	Description	Contact & Terminals Plating	Terminals	Operating Force Fa (Newtons)	Tactile ratio (min)	Operating Life (operations)	Electrical Travel (mm) (for information only)	Electrical Height from PCB (mm)
✓	Y31B31132FPLFS	KSC231J SP DELTA LFS	Silver	J	3.5±0.9	Min 25%	300,000	0.4	3.1±0.2
✓	Y31B33132FPLFG	KSC233J SPECIAL DELTA LFG	Gold	J	3.5±0.9	Min 25%	300,000	0.4	3.1±0.2
✓	Y31B41137FPLFS	KSC241J SP DELTA LFS	Silver	J	3.55±0.9	Min 30%	300,000	0.4	3.1±0.2
✓	Y31B42137FPLFS	KSC242J SP DELTA LFS	Silver	J	3.55±0.9	Min 30%	800,000	0.4	3.1±0.2
✓	Y31B43137FPLFG	KSC243J SP DELTA LFG	Gold	J	3.55±0.9	Min 30%	300,000	0.4	3.1±0.2
✓	Y31B44137FPLFG	KSC244J SP DELTA LFG	Gold	J	3.55±0.9	Min 30%	800,000	0.4	3.1±0.2
✓	Y31B51137FPLFS	KSC251J SP DELTA LFS	Silver	J	6.2±1.55	Min 35%	100,000	0.55	2.95±0.2
✓	Y31B53137FPLFG	KSC253J SP DELTA LFG	Gold	J	6.2±1.55	Min 35%	100,000	0.55	2.95±0.2

Notes: Supply status: ✓: Available for ordering;
ORO: Available On Request Only. Please contact your Littelfuse representative for details.

For long life version, please consult the specific Tireless Endurance datasheet : KSC2 TE

Liability Limitation

This datasheet does not provide enough information for applications that require a certain level of quality or safety such as automotive, medical systems, or safety equipement. Please contact customer service for the contractual specification package.

Disclaimer Notice - Information furnished is believed to be accurate and reliable. However, users should independently evaluate the suitability of and test each product selected for their own applications. Littelfuse products are not designed for, and may not be used in, all applications. Read complete Disclaimer Notice at http://www.littelfuse.com/disclaimer-electronics.

© 2026 Littelfuse, Inc.
Specifications are subject to change without notice.
Revised: VL 01/23/26