20GN compact DC Motor Gearhead

The Igarashi 20GN motor gearhead combination is designed for applications where small package size is a major design parameter. The 12V version of this extremely compact package will be stocked in large quantities in ratios of 50:1, 150:1 and 380:1. Other versions with supply voltages from 4 to 24V and alternative gear ratios are available to order.
Measuring only 40mm long and weighing 30g the 20GN has a maximum axial load of 2N and the spur gearhead creates a maximum peak torque of 180mNm.

The 20GN is ideal for applications such as card reader mechanisms, small drawer actuators and general instrumentation equipment.

Weight 30g
DC permanent magnet motor
Spur gearhead
Voltage: 4 to 24V
RFI suppression by capacitor
Radial load max: 2.5N at 5mm from mounting surface
Axial load max: 2N
Axial play max: 0.5mm

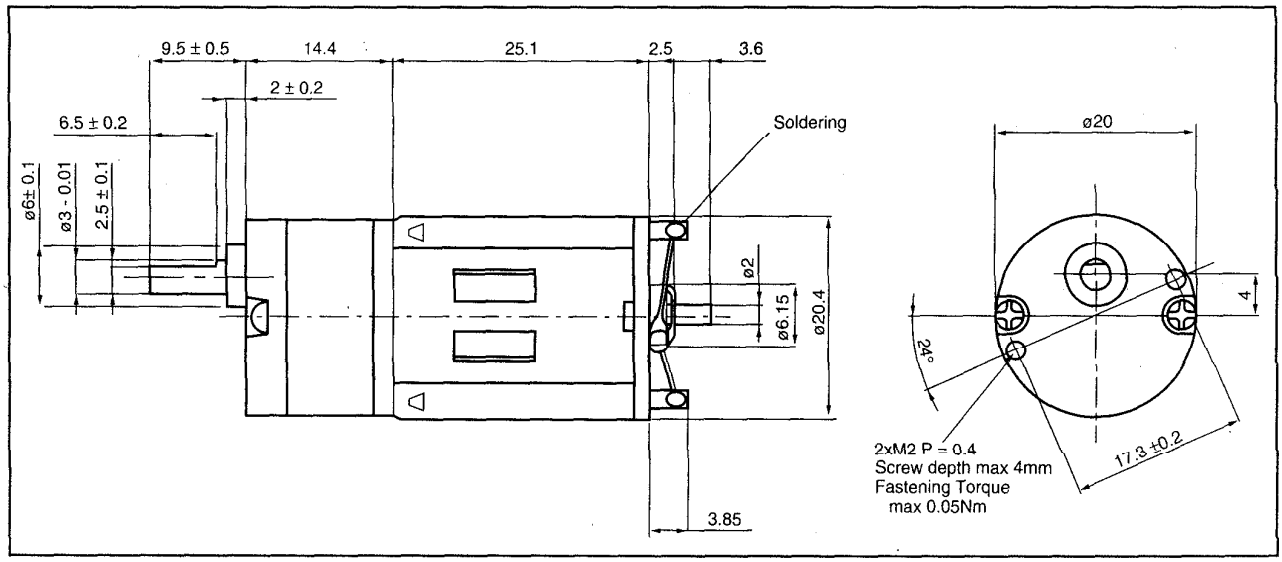

Technical Data

Motor Gear Type	Nominal Voltage DC	Gear Ratio i	No-Load Speed rpm	Continuous Operation At Maximum Efficiency			Gear Peak Torque max. mNm
				Speed rpm	Current A	Torque mNm	
330-050	12	50	200	175	0,13	30	90
330-150	12	150	67	60	0,11	60	180
330-380	12	380	25	23	0,08	60	180

Trident Engineering Limited
Trident House, King Street Lane, Winnersh, Wokingham, Berkshire RG41 5AS
Tel: 0118 9786444 Fax: 0118 9776345 email: sales@tridenteng.co.uk www.tridenteng.co.uk

TRIDENT

12mm coreless DC motor fitted with spur gearheads

The SC12G is a high quality combination of a coreless DC motor and spur gearhead, that provides a extremely cost effective drive solution.
Available in 12 volts with 9 ratios providing a maximum rated torque of 19.6mNm it is ideally suited to a wide range of applications.

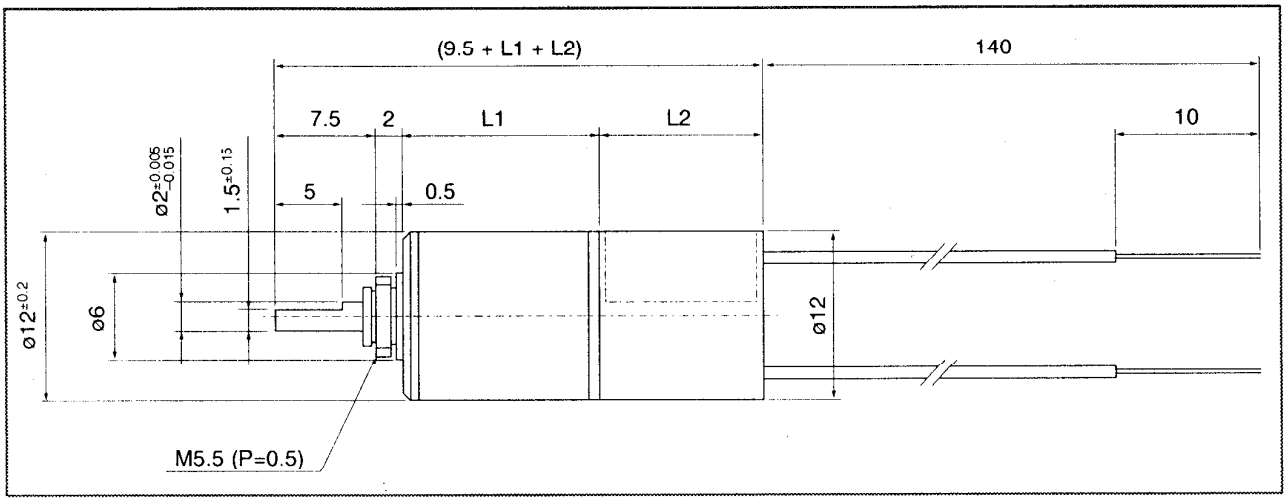

Part number	Ratio	Rated torque mNm	Rated torque kg-cm	Rated speed rpm	Rated current mA	No load speed rpm	No load current mA	L1 mm	L2 mm
SC12G-12-0015	15:1	2.45	0.025	889	55	1087	15	12	20
SC12G-12-0032	32:1	4.90	0.050	413	55	509	15	14.2	20
SC12G-12-0052	52:1	8.33	0.085	251	55	313	15	14.2	20
SC12G-12-0070	70:1	9.81	0.10	194	50	234	15	14.2	20
SC12G-12-0103	103:1	14.7	0.15	127	55	158	15	15.6	20
SC12G-12-0144	144:1	19.6	0.20	92	55	113	15	15.6	20
SC12G-12-0209	209:1	19.6	0.20	68	40	78	15	15.6	20

Trident Engineering Limited
Trident House, King Street Lane, Winnersh, Wokingham, Berkshire RG41 5AS
Tel: 0118 9786444 Fax: 0118 9776345 email: sales@tridenteng.co.uk www.tridenteng.co.uk

PLANETARY GEARHEAD

Metal Version

GP32._ _ _ _

TRIDENT ENGINEERING LIMITED
Trident House, King Street Lane,
Winnersh, Wokingham,
Berkshire, RG41 5AS

Telephone: 0118 978 6444
Fax: 0118 977 6345
Email: sales@tridenteng.co.uk
www.tridenteng.co.uk

General data

Planetary gearhead	straight teeth
Bearing at output	ball bearing
Radial play, 5mm from flange	max. 0.08mm
Axial play	max. 0.7mm
Max. permissible axial load	120N
Max. permissible force for press fits	120N
Average backlash lo load per stage	<0.9°
Recommended input speed	<4000rpm
Recommended temperature range	-20/+80°C

	1 stage	2 stages	3 stages
Max radial load 12mm from flange	70N	140N	210N
Efficiency	80%	75%	70%

Product combinations

2-29/02
3-30/05
3-38/14

Gearhead Order No	Ratio reduction	No of stages	Max Torque continuous Nm	Max Torque intermittent Nm	Weight G	L1 Length
GP32 0005	5.2:1	1	0.75	1.12	130	26.6
GP32 0019	19.2:1	2	2.25	3.37	170	36.10
GP32 0027	27:1	2	2.25	3.37	170	36.10
GP32 0035	35:1	2	2.25	3.37	170	36.10
GP32 0071	71:1	3	4.50	6.75	215	45.60
GP32 0100	100:1	3	4.50	6.75	215	45.60
GP32 0139	139:1	3	4.50	6.75	215	45.60
GP32 0181	181:1	3	4.50	6.75	215	45.60
GP32 0236	236:1	3	4.50	6.75	215	45.60

The ratios shown are stock ratios, there are many more options available please contact our technical department for more details.

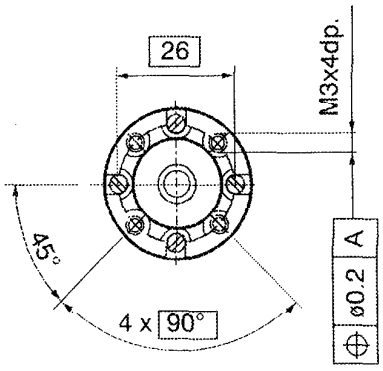

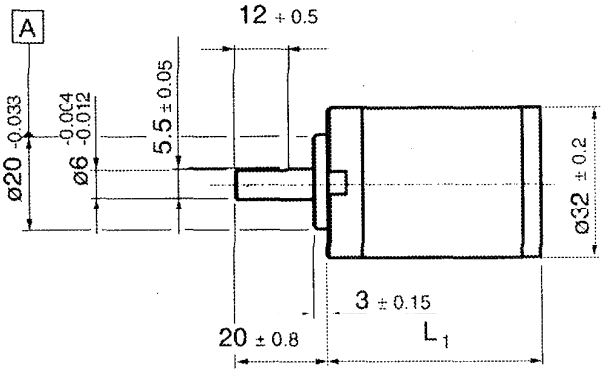

Notes

DC MOTOR

14 watt

3-38/14 _ _

TRIDENT ENGINEERING LIMITED
Trident House, King Street Lane,
Winnersh, Wokingham,
Berkshire, RG41 5AS

Telephone: 0118 978 6444
Fax: 0118 977 6345
Email: sales@tridenteng.co.uk
www.tridenteng.co.uk

Stock Voltages		12	24
1. Voltage	V	12	24
2. Power Output	W	13.9	13.2
3. Rated Torque	mN-m	24.5	24.5
	g-cm	250	250
4. Rated Speed	r/min	5,400	5,150
5. Rated Current	mA	1,660	850
6. No load Speed	r/min	6,600	6,300
7. No. load Current	mA	205	110
8. Starting Torque	mN-m	137	134
	g-cm	1,400	1,370
9. Torque Constant	mN-m/A	16.9	33.1
	g-cm/A	172	338
10. Voltage Constant	V/1000r/min	1.8	3.5
11. Winding Resistance	Ω	1.7	5.9
12. Winding inductance	m H	0.9	3.7
13. Moment of Inertia	g-cm²	39	39
14. Mechanical Constant	mS	23	21
15. Thermal Resistance	°C/W	17	17

Product combinations

Gearheads GP32, GS40, GPP32, GS38

Encoders HEDS

Front Mounting Face

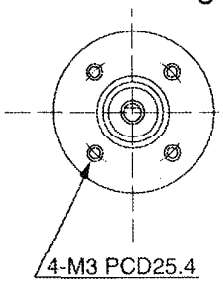

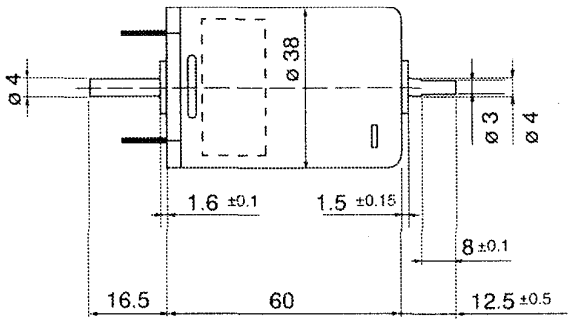

Notes

