E40624

Welding adapters EN10357 series C (ASME BPE)

ADAPT EN10357-C DN65

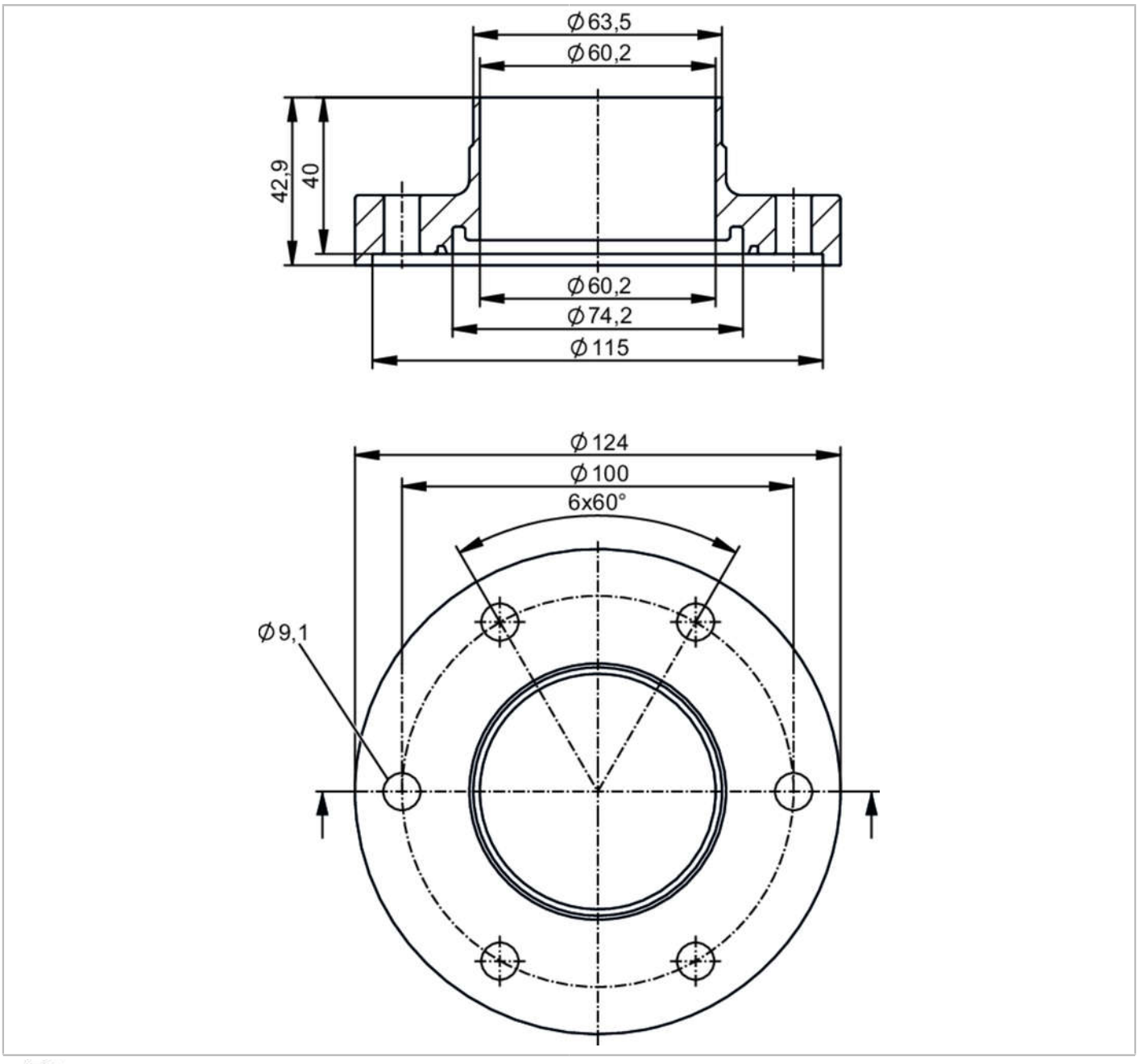

EC 1935/2004 FCM

Application		
Design	for volumetric flow meters SMF	
Application	food and beverage industry; hygienic systems	
Pressure rating	25 bar	2.5 MPa
Tests / approvals		
Pressure Equipment Directive	A possible classification to PED depends on the application and has to be carried out by the user / operator.	
Safety instructions	The compatibility between medium and product material has to be checked in all applications.	

E40624

Welding adapters EN10357 series C (ASME BPE)

ADAPT EN10357-C DN65

Mechanical data		
Weight	[g]	3473.4
Materials		stainless steel (316L/1.4404)
Nominal diameter		DN65 (2 1/2“)
Sensor connection		ifm-specific device flange
Process connection		welding adapter EN10357 series C (ASME BPE)
Process connection suitable for pipe standard		(DIN EN 10357 series C); (DIN EN 10357 series D); (DIN 11866 series C); (BS 4825 Part 1); (ISO 2037)
Surface characteristics Ra/Rz of the wetted parts		Ra ≤ 0.4 µm
Accessories		
Items supplied		screws 12
Remarks		
Pack quantity		2 pcs.