PERFORMANCE
MADE
SMARTER

Product Manual
5202
Pulse isolator

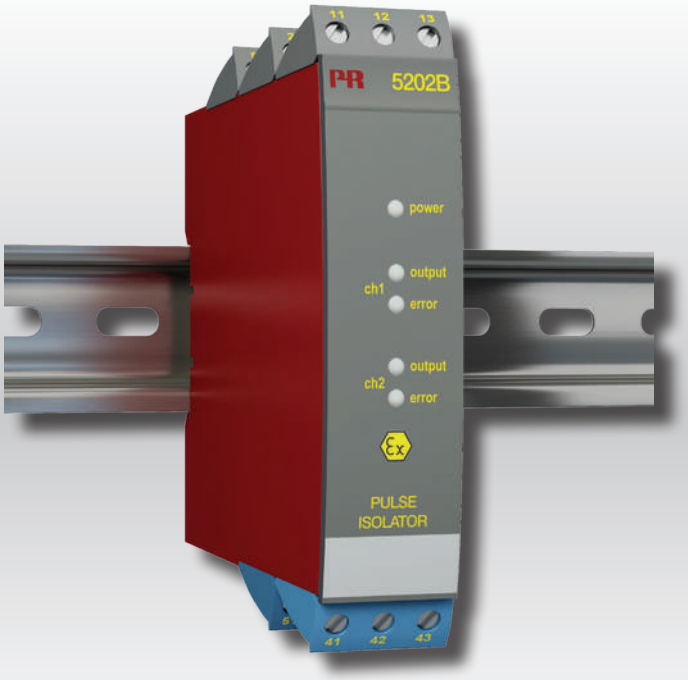

TEMPERATURE | I.S. INTERFACES | COMMUNICATION INTERFACES | MULTIFUNCTIONAL | ISOLATION | DISPLAY

No. 5202V108-UK
From serial no.: 030481661

PR electronics

6 Product Pillars
to meet your every need

Individually outstanding, unrivalled in combination

With our innovative, patented technologies, we make signal conditioning smarter and simpler. Our portfolio is composed of six product areas, where we offer a wide range of analog and digital devices covering over a thousand applications in industrial and factory automation. All our products comply with or surpass the highest industry standards, ensuring reliability in even the harshest of environments and have a 5-year warranty for greater peace of mind.



Temperature

Our range of temperature transmitters and sensors provides the highest level of signal integrity from the measurement point to your control system. You can convert industrial process temperature signals to analog, bus or digital communications using a highly reliable point-to-point solution with a fast response time, automatic self-calibration, sensor error detection, low drift, and top EMC performance in any environment.



I.S. Interface

We deliver the safest signals by validating our products against the toughest safety standards. Through our commitment to innovation, we have made pioneering achievements in developing I.S. interfaces with SIL 2 Full Assessment that are both efficient and cost-effective. Our comprehensive range of analog and digital intrinsically safe isolation barriers offers multifunctional inputs and outputs, making PR an easy-to-implement site standard. Our backplanes further simplify large installations and provide seamless integration to standard DCS systems.



Communication

We provide inexpensive, easy-to-use, future-ready communication interfaces that can access your PR installed base of products. All the interfaces are detachable, have a built-in display for readout of process values and diagnostics, and can be configured via push-buttons. Product specific functionality includes communication via Modbus and Bluetooth and remote access using our PR Process Supervisor (PPS) application, available for iOS and Android.



Multifunction

Our unique range of single devices covering multiple applications is easily deployable as your site standard. Having one variant that applies to a broad range of applications can reduce your installation time and training, and greatly simplify spare parts management at your facilities. Our devices are designed for long-term signal accuracy, low power consumption, immunity to electrical noise and simple programming.



Isolation

Our compact, fast, high-quality 6 mm isolators are based on microprocessor technology to provide exceptional performance and EMC-immunity for dedicated applications at a very low total cost of ownership. They can be stacked both vertically and horizontally with no air gap separation between units required.



Display

Our display range is characterized by its flexibility and stability. The devices meet nearly every demand for display readout of process signals, and have universal input and power supply capabilities. They provide a real-time measurement of your process value no matter the industry, and are engineered to provide a user-friendly and reliable relay of information, even in demanding environments.

Pulse isolator
5202

Contents

Warning 2
Symbol identification 2
Safety instructions 3
How to demount system 5000 4
Applications 5
Technical characteristics 5
Mounting / installation 5
Applications 6
Order 7
Electrical specifications 7
Jumper programming 9
Function description 9
Block diagram: 5202A1 and 5202A2 10
Block diagram: 5202A4 10
Block diagram: 5202B1 and 5202B2 11
Block diagram: 5202B4 11
Connections 12
UL Control Drawing 5202QU01 13
Document history 14

Warning



GENERAL

This device is designed for connection to hazardous electric voltages. Ignoring this warning can result in severe personal injury or mechanical damage.
To avoid the risk of electric shock and fire, the safety instructions of this manual must be observed and the guidelines followed.
The specifications must not be exceeded, and the device must only be applied as described in the following.
Prior to the commissioning of the device, this manual must be examined carefully.
Only qualified personnel (technicians) should install this device.
If the equipment is used in a manner not specified by the manufacturer, the protection provided by the equipment may be impaired.

Warning



HAZARD-OUS VOLTAGE

Until the device is fixed, do not connect hazardous voltages to the device. The following operations should only be carried out on a disconnected device and under ESD-safe conditions:

- Dismantlement of the device for setting of DIP-switches and jumpers.
- General mounting, connection and disconnection of wires.
- Troubleshooting the device.

Repair of the device replacement of circuit breakers must be done by PR electronics A/S only.



Warning



INSTAL-LATION

5202B4:
To keep the safety distances, one relay must not be connected to hazardous voltage at the same time as the other relay on the same channel is connected to non-hazardous voltage.

Symbol identification



Triangle with an exclamation mark: Warning / demand. Potentially lethal situations.



The CE mark proves the compliance of the device with the essential requirements of the directives.



The **double insulation symbol** shows that the device is protected by double or reinforced insulation.



Ex devices have been approved according to the ATEX directive for use in connection with installations in explosive areas.

Safety instructions

Definitions

Hazardous voltages have been defined as the ranges: 75 to 1500 Volt DC, and 50 to 1000 Volt AC.
Technicians are qualified persons educated or trained to mount, operate, and also trouble-shoot technically correct and in accordance with safety regulations.
Operators, being familiar with the contents of this manual, adjust and operate the knobs or potentiometers during normal operation.

Receipt and unpacking

Unpack the device without damaging it and check whether the device type corresponds to the one ordered. The packing should always follow the device until this has been permanently mounted.

Environment

Avoid direct sun light, dust, high temperatures, mechanical vibrations and shock, and rain and heavy moisture. If necessary, heating in excess of the stated limits for ambient temperatures should be avoided by way of ventilation.
All devices fall under Installation Category II, Pollution Degree 1, and Insulation Class II.

Mounting

Only technicians, who are familiar with the technical terms, warnings, and instructions in the manual and who are able to follow these, should connect the device. Should there be any doubt as to the correct handling of the device, please contact your local distributor or, alternatively,

PR electronics A/S
www.prelectronics.com

Mounting and connection of the device should comply with national legislation for mounting of electric materials, i.e. wire cross section, protective fuse, and location. Descriptions of input / output and supply connections are shown in the block diagram and on the side label.

The following apply to fixed hazardous voltages-connected devices:

The max. size of the protective fuse is 10 A and, together with a power switch, it should be easily accessible and close to the device. The power switch should be marked with a label indicating that it will switch off the voltage to the device.

Year of manufacture can be taken from the first two digits in the serial number.

Calibration and Adjustment

During calibration and adjustment, the measuring and connection of external voltages must be carried out according to the specifications of this manual. The technician must use tools and instruments that are safe to use.

Normal operation

Operators are only allowed to adjust and operate devices that are safely fixed in panels, etc., thus avoiding the danger of personal injury and damage. This means there is no electrical shock hazard, and the device is easily accessible.

Cleaning

When disconnected, the device may be cleaned with a cloth moistened with distilled water.

Liability

To the extent the instructions in this manual are not strictly observed, the customer cannot advance a demand against PR electronics A/S that would otherwise exist according to the concluded sales agreement.

How to demount system 5000

First, remember to demount the connectors with hazardous voltages.

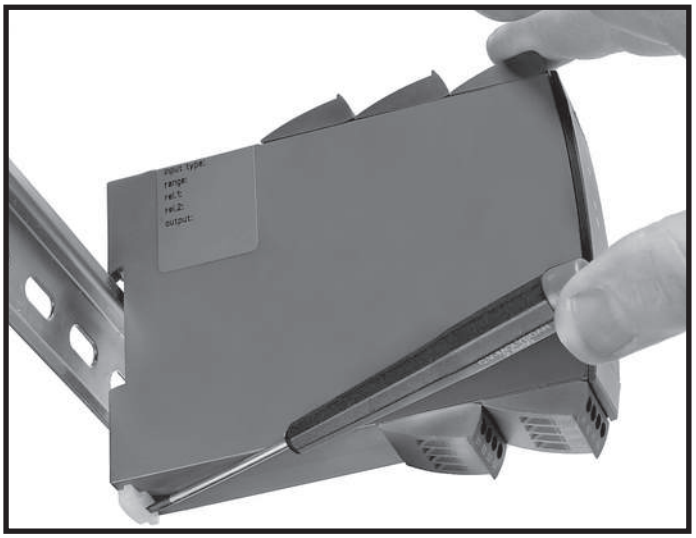

Picture 1:
The device is detached from the DIN rail by moving the bottom lock down.

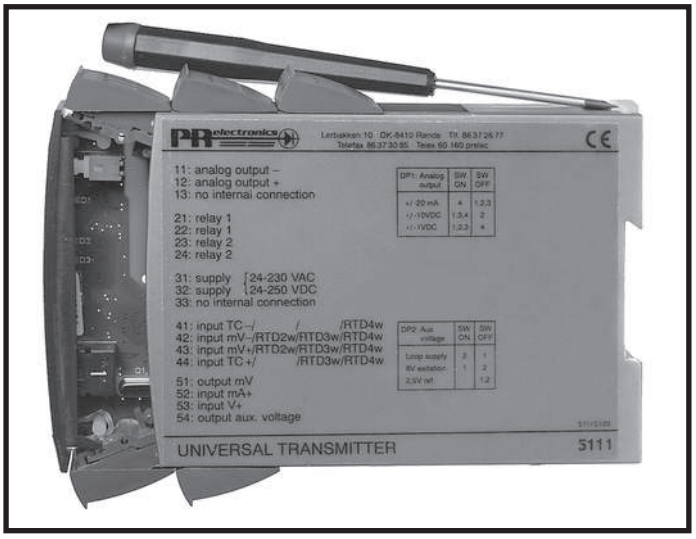

Picture 2:
Then, by lifting the upper lock and pulling the front plate simultaneously, the PCB is removed.
Switches and jumpers can now be adjusted.

Pulse isolator
5202

- B2 channels - 2 or 4 outputs
- 5-port 3.75 kVAC galvanic isolation
- Dual output
- Cable error detection
- Universal AC or DC supply

Applications

- Pulse isolator for the supply of NAMUR sensors. 5202B1, -B2 and -B4 have a safety barrier for the supply of NAMUR sensors installed in hazardous area.
- Pulse isolator for the detection of mechanical contacts. 5202B1, -B2 and -B4 have a safety barrier for the detection of mechanical contacts installed in hazardous area.
- One input signal can be used on two separate outputs.
- A cable error alarm can be detected on a separate output.

Technical characteristics

- PR5202A1, -A2, -B1 and -B2 have relays with change-over contacts or open NPN collectors. For 5202B1 and -B2 these are available in the safe area.
- PR5202A4 and -B4 have 4 SPST relays, which are activated simultaneously two and two. Each relay can be programmed to the function N.O. or N.C. For 5202B4 the relays are available in the safe area.
- Inputs, outputs, and supply are floating and galvanically separated.
- The 5202 is designed according to strict safety requirements and is thus suitable for application in SIL 2 installations.

Mounting / installation

- Mounted vertically or horizontally on a DIN rail. Up to 84 channels per metre can be mounted.

Applications

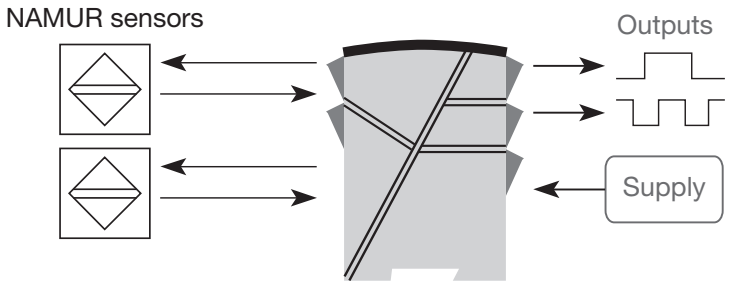

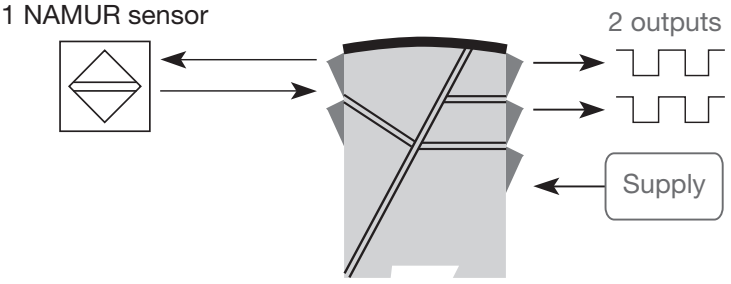

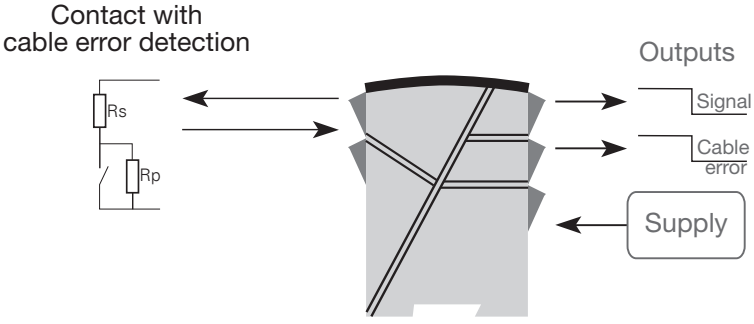

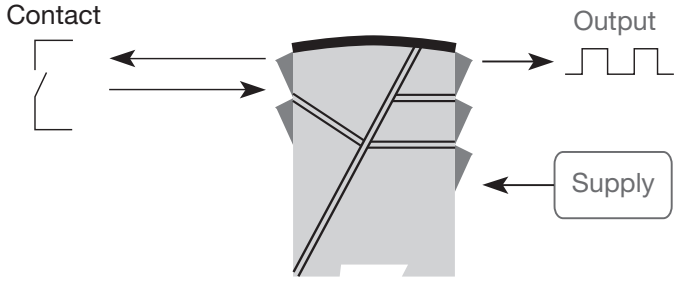

Order

Type	Version		Output	
5202	Standard	: A	Open collector NPN	: 1
			2 x 1 relay	: 2
	ATEX Ex	: B	2 x 2 relays	: 4

Electrical specifications

Environmental conditions:

Operating temperature . . . . . -20°C to +60°C
Calibration temperature . . . . . 20...28°C
Relative humidity . . . . . < 95% RH (non-cond.)
Protection degree IP20

Mechanical specifications:

Dimensions (H x W x D) . . . . . 109 x 23.5 x 130 mm
Weight approx. . . . . 230 g
DIN rail type. . . . . DIN 46277
Max. wire size. . . . . 1 x 2.5 mm^2 stranded wire
Screw terminal torque. . . . . 0.5 Nm

Common electrical specifications:

Supply voltage, universal . . . . . 21.6...253 VAC, 50...60 Hz
or 19.2...300 VDC
Internal consumption, 5202A1, -A2, -B1 and -B2 . . . . . ≤ 1.5 W (2 channels)
Max. consumption, 5202A1, -A2, -B1 and -B2 . . . . . ≤ 1.5 W (2 channels)
Internal consumption, 5202A4 and -B4 . . . . . ≤ 2.0 W (2 channels)
Max. consumption, 5202A4 and -B4 . . . . . ≤ 2.0 W (2 channels)
Fuse . . . . . 400 mA T / 250 VAC
Isolation voltage, test / operation. . . . . 3.75 kVAC / 250 VAC

EMC immunity influence . . . . . < ±0.5%
Extended EMC immunity:
NAMUR NE 21, A criterion, burst . . . . . < ±1%

Auxiliary voltage:
NAMUR supply . . . . . 8 VDC / 8 mA

Inputs:

Sensor types:

NAMUR acc. to . . . . . EN 60947-5-6
Mechanical contact
Frequency range . . . . . 0...5 kHz
Pulse length . . . . . > 0.1 ms
Input resistance . . . . . 1 kΩ
Trig level, signal . . . . . < 1.2 mA, > 2.1 mA
Trig level, cable error . . . . . < 0.1 mA, > 6.5 mA

Outputs:

Relay outputs:

Max. frequency . . . . . 20 Hz
Max. voltage . . . . . 250 VRMS
Max. current. . . . . 2 A / AC
Max. AC power . . . . . 100 VA
Max. load at 24 VDC . . . . . 1 A

Open NPN collector outputs:

Max. frequency	5 kHz
Pulse length	> 0.1 ms
Load, max. current / voltage	80 mA / 30 VDC
Voltage drop at 25 mA / 80 mA	< 0.75 VDC / < 2.5 VDC

Ex / I.S. data:

Terminal 41...43, (51...53)

U_m	250 V
U_o	10.6 VDC
I_o	13.8 mADC
P_o	38 mW
L_o	160 mH
C_o	1.9 µF

Observed authority requirements:

EMC	2014/30/EU
LVD	2014/35/EU
ATEX	2014/34/EU
RoHS	2011/65/EU
PELV/SELV	IEC 364-4-41 and EN 60742

Approvals:

UL	UL 508
EAC	TR-CU 020/2011

I.S. / Ex approvals:

ATEX	DEMKO 99ATEX127186
UL	UL 913
EAC Ex TR-CU 012/2011	RU C-DK.GB08.V.00410

Functional Safety:

Hardware assessed for use in SIL applications
FMEDA report - www.prelectronics.com

Jumper programming

Signal transmission	Channel 1 JP 11	Channel 2 JP 21
Direct	 1 2 3	 1 2 3
Inverted	 1 2 3	 1 2 3

Cable error detection	Channel 1 JP 12	Channel 2 JP 22
ON	 1 2 3	 1 2 3
OFF	 1 2 3	 1 2 3

Channel 1 signal to channel 2	Channel 1 JP 13
Cable error	 1 2 3
Signal	 1 2 3

Channel 2 function	Channel 2 JP 23
Channel 1 to channel 2 ON, input 2 disabled	 1 2 3
Channel 1 to channel 2 OFF, input 2 active	 1 2 3

5202B4			
Relay function		**N.O.**	**N.C.**
Channel 1	Relay 1, JP41	 N.O. N.C.	 N.O. N.C.
	Relay 2, JP42	 N.O. N.C.	 N.O. N.C.
Channel 2	Relay 1, JP51	 N.O. N.C.	 N.O. N.C.
	Relay 2, JP52	 N.O. N.C.	 N.O. N.C.

- When a channel 1 signal or cable errors are transmitted to channel 2, JP 22 must be in position 2-3, and JP 23 must be in position 1-2.
- Signal transmission to channel 2: If the channel 1 signal is inverted (JP11 in position 2-3), the channel 2 signal will also be inverted. In this case, the
  inversion on channel 2 can be reversed by inverting the channel 2 signal (JP21 in position 2-3).
- When channel 2 is used individually, input 2 is activated by JP 23 in position 2-3.

Function description

Examples of connections on block diagram (1)...(4)

(1) NAMUR sensor with cable error detection in case of cable disconnection or short-circuit.
(2) Mechanical contact with cable error detection in case of cable disconnection or short-circuit, when Rs and Rp are mounted on the contact.
(3) Mechanical contact with cable error detection in case of cable disconnection, when Rp is mounted on the contact.
(4) Mechanical contact without cable error detection.

Block diagram: 5202A1 and 5202A2

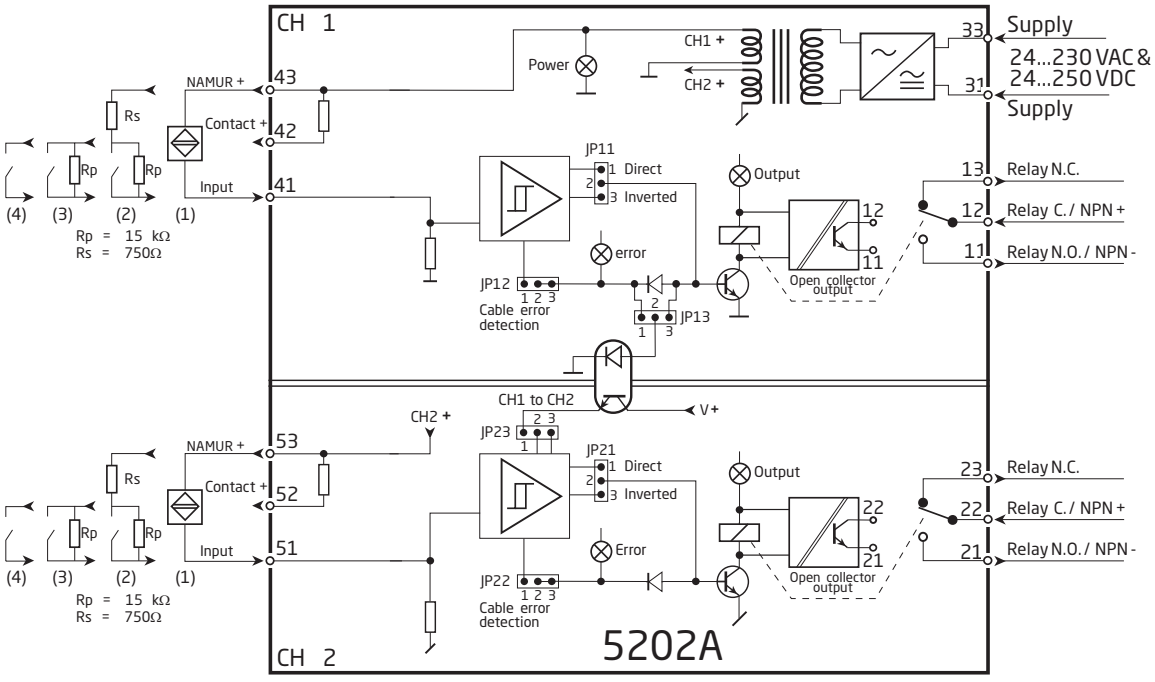

Block diagram: 5202A4

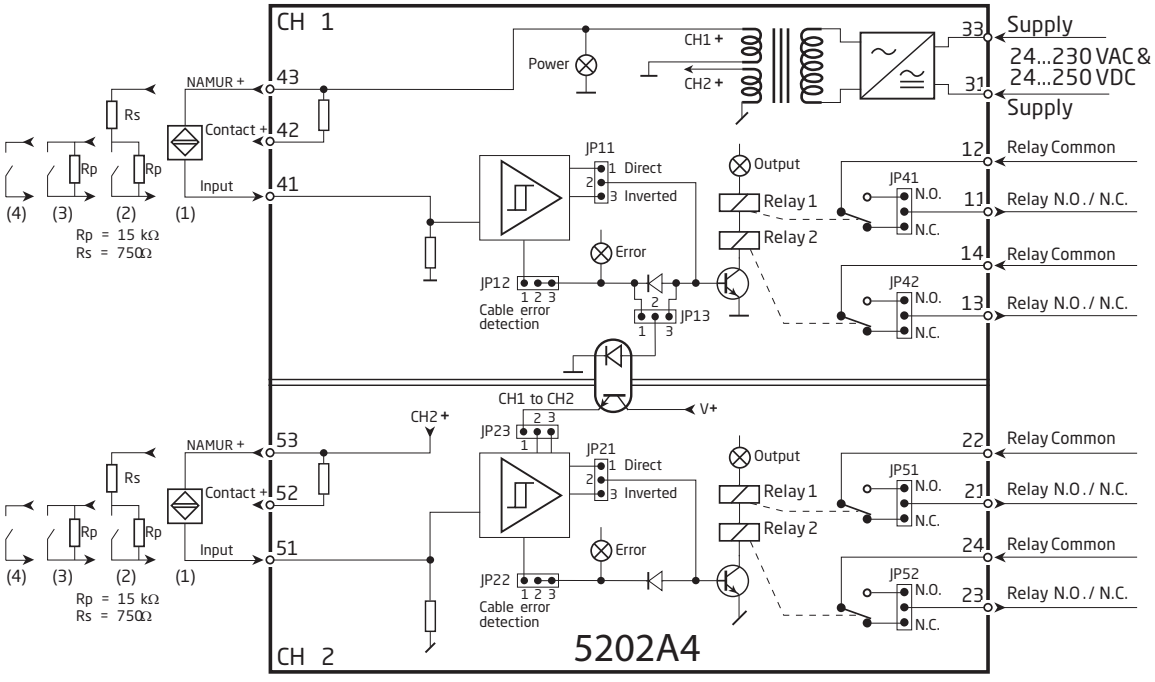

Block diagram: 5202B1 and 5202B2

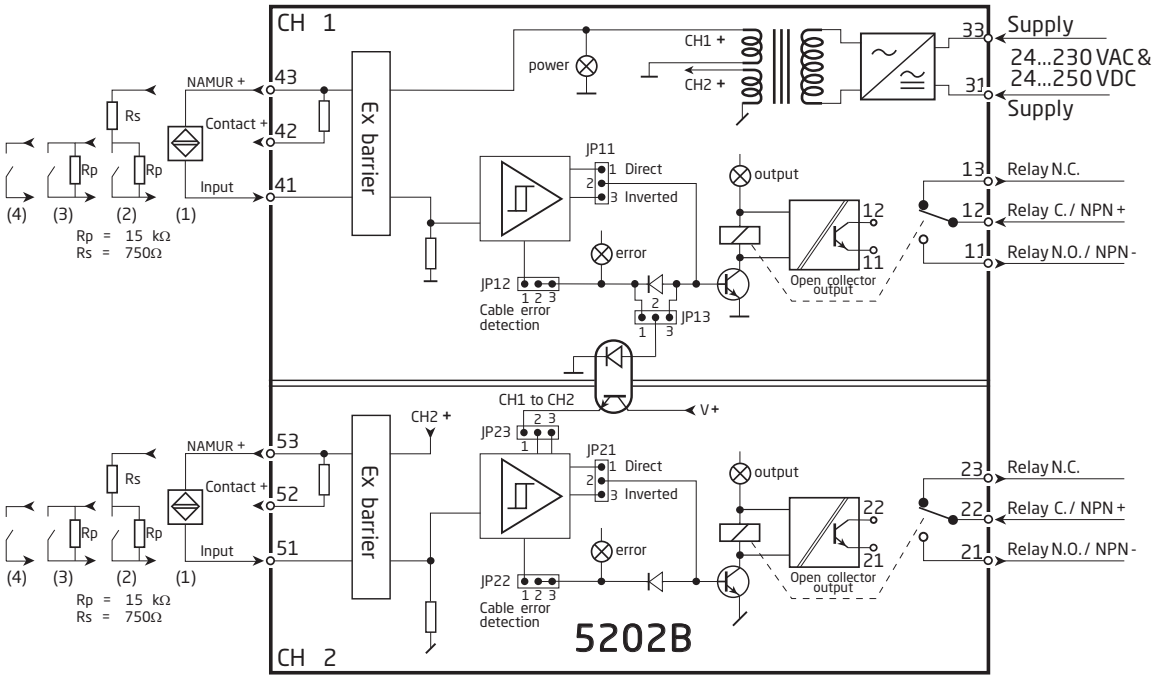

Block diagram: 5202B4

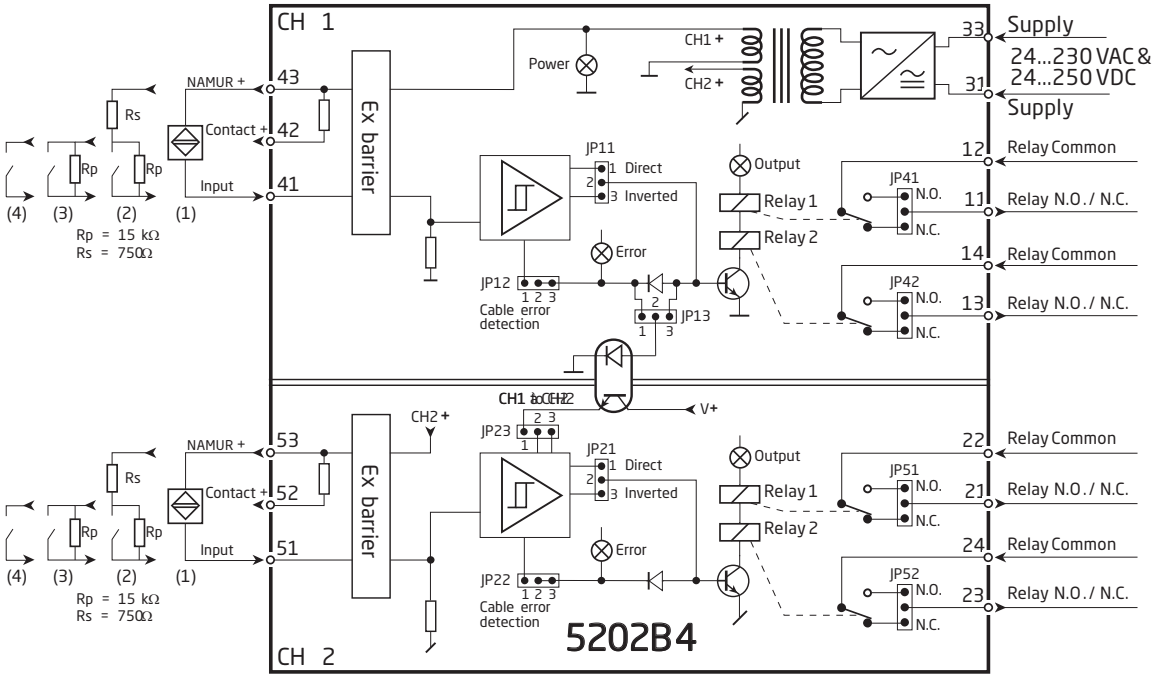

Connections

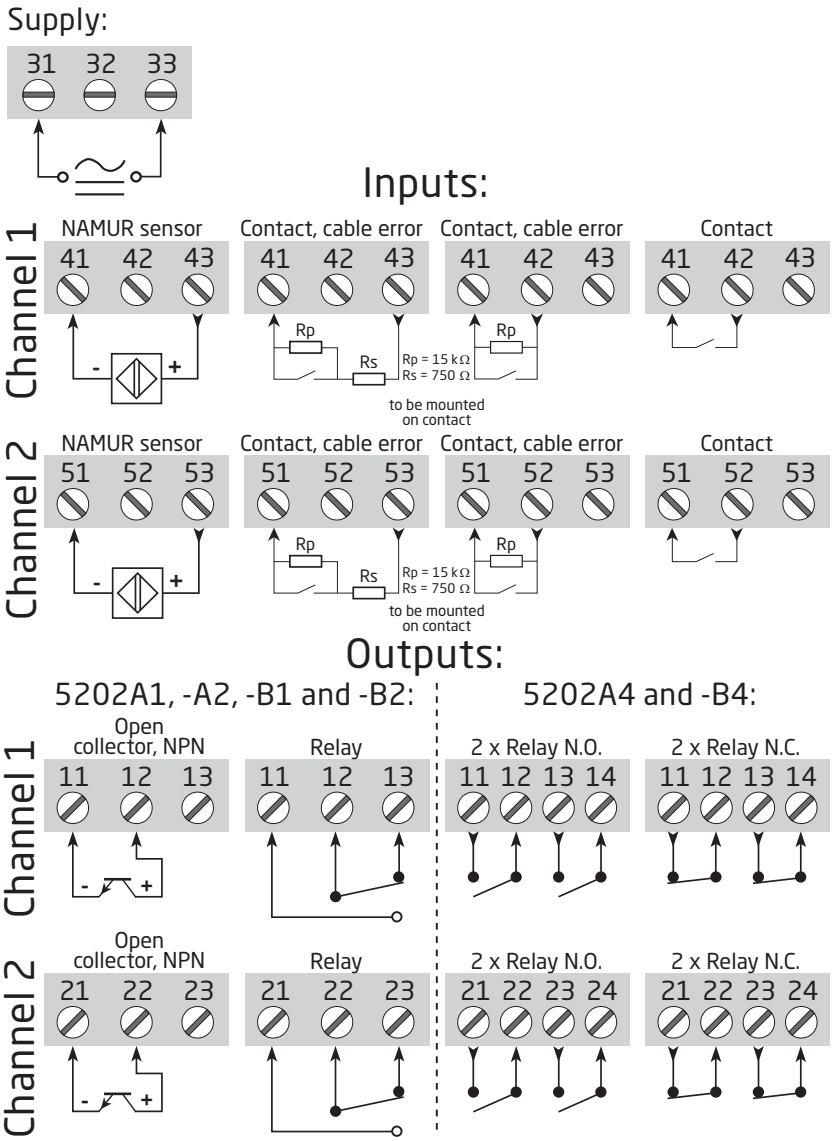

Control Drawing 5202QU01

Hazardous (Classified) Location

Class I, Division 1, Group A,B,C,D
Class I , Zone 0 and 1, Group IIC
Class II, Division 1 Group E, F, G

Nonhazardous

Associated apparatus
Galvanic Isolated

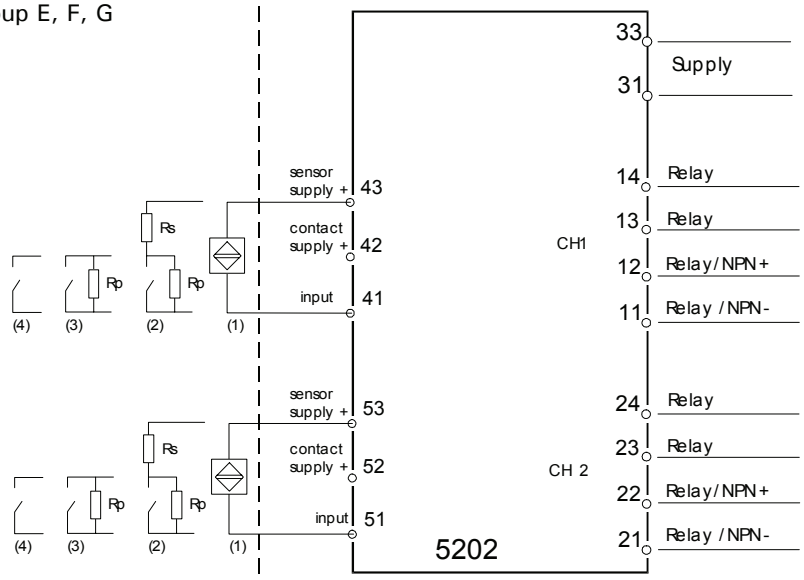

5202B Associated apparatus parameters			
CH1	Terminals 41 to 43		
CH2	Terminals 51 to 53		
Vt Uo)	10.6 V		
It (Io)	13.8 mA		
Po	0.038 W		
	IIC / grp. A,B	IIB / grp. C	IIA / grp.D
Ca (Co)	1.9 µF	4.0 µF	50 µF
La (Lo)	160 mH	600 mH	1 H
Relay output 11 - 14 , 21 - 24			
Voltage	250V AC, 100 VA		
Current	2 A AC, 100 VA		
24VDC	1 A DC		
Pilot Duty	120/240 V AC, 100V AC		
NPN output 11 - 12, 21 - 22			
General purpose	30V DC, 80 mA		
Pilot duty	30V DC, 80 mA		

Intrinsically safe apparatus entity parameters:

Vmax (Ui) ≥ Vt (Uo)
Imax (Ii) ≥ It (Io)
Pi ≥ Po
$Ca \geq C_{cable} + Ci$
$La \geq L_{cable} + Li$

The sum of capacitance and inductance of cable and intrinsic safe equipment must be less or equal to Ca and La

Installation notes:

1) The maximum nonhazardous location voltage is 250Vac/dc.
2) The installation shall be in accordance with the National Electrical Code NFPA 70, Articles 504 and 505.
3) The terminals of the two individual channels shall not be interconnected in any way.
4) Install in Pollution degree 2 or better
5) Use 60 / 75 °C Copper Conductors with Wire Size AWG: (26 – 14).
6) Warning: Substitution of components may impair intrinsic safety.
7) If cable parameters are unknown C_{cable} may be set to 60pF/ft and L_{cable} may be set to 0.20 µH/ft

Rev. AA 2003-09-19

Document history

The following list provides notes concerning revisions of this document.

Rev. ID	Date	Notes
108	1510	GOST approval replaced with EAC approval

We are near you, *all over the world*

Our trusted red boxes are supported wherever you are

All our devices are backed by expert service and a 5-year warranty. With each product you purchase, you receive personal technical support and guidance, day-to-day delivery, repair without charge within the warranty period and easily accessible documentation.

We are headquartered in Denmark, and have offices and authorized partners the world over. We are a local business with a global reach. This means that we are always nearby and know your local markets well.
We are committed to your satisfaction and provide PERFORMANCE MADE SMARTER all around the world.

For more information on our warranty program, or to meet with a sales representative in your region, visit prelectronics.com.

Benefit today from
PERFORMANCE MADE SMARTER

PR electronics is the leading technology company specialized in making industrial process control safer, more reliable and more efficient. Since 1974, we have been dedicated to perfecting our core competence of innovating high precision technology with low power consumption. This dedication continues to set new standards for products communicating, monitoring and connecting our customers' process measurement points to their process control systems.

Our innovative, patented technologies are derived from our extensive R&D facilities and from having a great understanding of our customers' needs and processes. We are guided by principles of simplicity, focus, courage and excellence, enabling some of the world's greatest companies to achieve PERFORMANCE MADE SMARTER.