EMAX E1.2 LOW VOLTAGE AIR CIRCUIT-BREAKERS

Sace Emax 2

Installation, operation and maintenance instructions for the installer and the user



Sace Emax 2
DOC. N° 1SDH000999R0002 - ECN000297030

© 2022 ABB | 1SDH000999R0002 - ECN000297030

Contents

Glossary **3**

Introduction **4**

1 - Contents 4

2 - Safety 5

3 - Regulations 6

Management operations **7**

1 - Transport and checking on receipt 7

2 - Unpacking and handling 10

3 - Description 12

4 - Environmental conditions 20

5 - Installation 20

Ekip Dip **29**

1 - General characteristics 29

2 - Operator interface 30

3 - Protections - Introduction 32

4 - List of alarms and signals 38

5 - Default parameters 39

Accessories **40**

1 - Overview 40

Putting into service and maintenance **41**

1 - Putting into service 41

2 - Identification of alarms or failures 46

3 - Maintenance 50

4 - Decommissioning and treatment at end of life 50

Glossary

Term	Description
SACE Emax 2	New series of ABB SACE air circuit-breakers
CB	Circuit-breaker
Trip unit	Electronic unit connected to the CB, which provides measuring, monitoring and protection functions for the CB if faulty operating conditions occur. In the event of an alarm, it commands a TRIP
Ekip Dip	Trip unit SACE Emax 2 CBs, equipped with dip-switch type interface
Trip coil	CB opening actuator controlled directly by Trip unit
TRIP	Concluding action of protection timing or a test command which, except in special configurations applicable to the trip unit, coincides with activation of the trip coil, which instantly opens the bars of each pole and interrupts the circulating current
Vaux	Auxiliary power supply
4P / 3P / 3P + N	CB configuration: four-pole (4P), three-pole (3P) and three-pole with external neutral (3P + N)
If	Fault current measured by Trip unit, useful for calculating the trip time t_t

Introduction

1 - Contents

Overview

This manual contains instructions on the operations to be performed on EMAX circuit-breakers E1.2 throughout their life cycle, from reception to installation, and from commissioning to subsequent maintenance during operation, with particular attention to the environment at the end of the life cycle of the product.

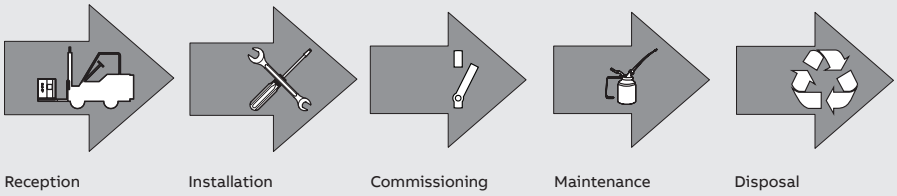

Figure 1

Integrated informations

A full description of Emax 2 circuit-breakers is available in document 1SDH001330R1002 (Emax 2 engineering manual) available on the website ABB library.

IMPORTANT: all codes and documents mentioned in this document refer to Emax 2 configured with Trip unit Firmware version= 3.xx.

If the Firmware version of the Trip unit on the Emax 2 circuit-breaker =2.xx, consult document 1SDH001330R0002 available on the website ABB library.

recipients

This manual refers to two user profiles, as defined by standard IEC 60050:

- Electrically Skilled Person (IEV 195-04-01): person with relevant education and experience to enable him or her to perceive risks and to avoid hazards which electricity can create.
- Trained Persons in the electrical field (IEV 195-04-02): person adequately advised or supervised by electrically skilled persons to enable him or her to perceive risks and to avoid danger which electricity can create.

IMPORTANT: This manual specifically indicates what operations can be performed by people trained in the field of electricity. All the remaining operations described in the handbook must be performed by skilled persons, in the electrical field. ABB declines all liability for damage to persons or property caused by failure to comply with the instructions in this document.

Specifications and supporting documents

To ensure that the Emax 2 circuit-breaker is installed and configured correctly, please read the information in this manual and in the technical documentation of the product, supplied with the circuit-breaker or available in the website ABB LIBRARY

Document	Description
1SDH001330R1002	Manual for design engineers with full information about the trip units and accessories for Emax 2
1SDH001316R1002	Manual of Ekip Touch trip units for Emax 2 circuit-breakers
1SDC200023D0906	Sace Emax 2 CBs General catalog
1SDM000091R0001	Sace Emax 2 CBs Circuit diagrams
1SDH001140R0001	Communication System Interface for Emax 2 CBs

Design notes

The information in this manual was written in Italian and then translated into other languages to conform to the laws and/or commercial requirements concerning the product.

2 - Safety

Warnings



Figure 2

The following warnings must be respected:

- **READ THE INSTRUCTIONS CAREFULLY BEFORE TRYING TO INSTALL, OPERATE OR REPAIR THE CIRCUIT BREAKER.**
- Store these instructions along with other documents for instruction, maintenance and installation, drawings and descriptive notes on the circuit-breaker.
- Keep these documents available during the installation, operation and maintenance of the appliance. The use of these instructions facilitates proper maintenance.
- install the circuit-breaker within the limits of the project described in the instruction manual shipped with the unit. These circuit-breakers are designed to operate with values of voltage and current within the limits of plate ratings. Do not install this equipment in systems operating at nominal values exceeding these limits.
- follow the safety procedures indicated by Your Company.
- Do not open any covers or doors, do not work on devices before removing power from all circuits, and after making sure of that with a measuring instrument.

WARNING!

- Detailed descriptions of standard procedures for installation, use, maintenance and principles for safe operation are not included. It is important to note that this document contains safety instructions and caution against certain methods (installation, operation and maintenance) that could cause injury to personnel, damage equipment, or make them unsafe.
- these warnings and alarms do not include all the conceivable methods of performing the installation, operation and maintenance operations recommended by ABB and others, which could be performed, or the possible consequences and complications of each conceivable method, neither will ABB investigate all those methods.
- anyone using maintenance procedures or devices, recommended by ABB or not, must check thoroughly that neither personal safety nor the safety devices are endangered by mode of installation, use, maintenance or the instruments used. For more information, questions or specific problems contact your nearest ABB representative.
- This manual is written for qualified personnel only and is not intended as a substitute for a proper course, or experience about safety procedures for this device.
- regarding products equipped with communication systems, the purchaser, installer or end customer are responsible for applying all the IT security measures to prevent risks deriving from connection to communication networks; among others, these risks include use of the product by unauthorized persons, alteration of its normal operation, access to and modification of the information.
- the purchaser, installer or end customer are responsible for ensuring that safety warnings and notices are affixed and moreover, that all points of access and operating devices are securely blocked when the switchgear is left even momentarily unattended.
- all the information contained in this document reflects the latest product information available at the time of printing. We reserve the right to edit the document at any time and without notice

3 - Regulations

Standards

The SACE Emax 2 circuit-breakers and their accessories comply with the following international standards:

- IEC 60947
- EN 60947
- CEI EN 60947
- IEC 61000
- UL 1066

They comply with the following EC directives:

- "Low Voltage Directives" (LVD) No. 2006/95/EC
- "Electromagnetic Compatibility Directive" (EMC) No. 2004/108/EC

The SACE Emax 2 circuit-breakers also feature a range certified according to these standards:

- Russian - GOST (Russia Certificate of Conformity)
- Chinese - China CCC (China Compulsory Certification)

Management operations

1 - Transport and checking on receipt

Introduction

The SACE Emax 2 circuit-breakers, on account of their weight, require special attention during transport and handling.

They are distributed with following packages:

- one package for fixed circuit-breaker
- two packages for withdrawable circuit-breakers (one package for the fixed part and one for the mobile part).

WARNING! comply with the following instructions during each transport phase:

- **The movable part of the circuit-breaker must be removed from the switchgear and/or from the relative fixed part even if this latter is not installed in the switchgear.**
- **The circuit-breaker must be in the open position.**
- **The circuit-breaker must be protected and fastened in its original packing.**
- **The closing springs of the circuit-breaker must be completely discharged.**

Weight of the circuit-breakers with packaging

The following table specifies the weights of the circuit-breakers with packaging:

	Fixed		Moving part of withdrawable device		Fixed part of withdrawable device	
	III	IV	III	IV	III	IV
E1.2	16 Kg / 35 lbs	18 Kg / 39 lbs	20 Kg / 44 lbs	23 Kg / 51 lbs	23 Kg / 51 lbs	26 Kg / 57 lbs
E1.2-A	16 Kg / 35 lbs	18 Kg / 39 lbs	22 Kg / 48 lbs	25.5 Kg / 56 lbs	24 Kg / 52 lbs	27 Kg / 59 lbs

NOTE:

- *weights are indicated with reference to the basic circuit-breakers including protection trip unit and its sensors, without terminals and without accessories.*
- *the weights of the fixed part of withdrawable circuit-breakers refer to the version with horizontal rear terminals.*

Transport of the packaged circuit-breaker

Consult the table "Weight of the circuit-breakers with packaging" before proceeding with the transport.

WARNING! improper lifting can result in death, serious injury to persons and damage to the equipment. Never lift a circuit-breaker and/or a fixed part above other people.

IMPORTANT: The trained personnel in charge of handling and lifting must use appropriate safety equipment.

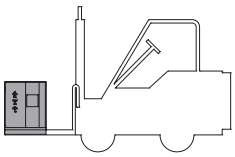

Identification of packaging

Examine the state of the packaging and check that:

- The data from the packaging nameplate match the data in the order.
- The box is intact and perfectly closed.

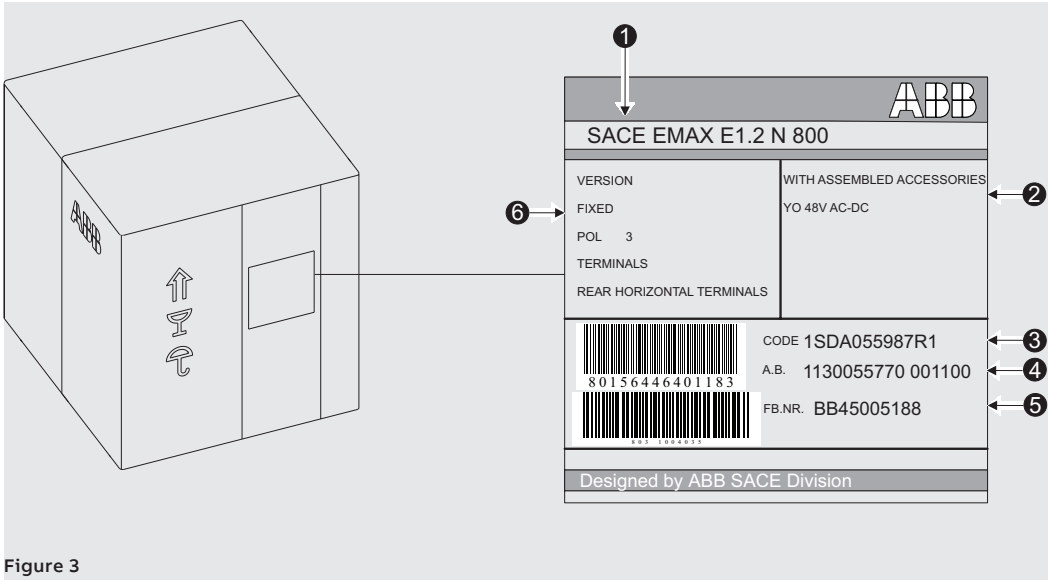

Figure 3

Pos.	Description
1	Short description of the circuit-breaker
2	Description of accessories
3	Commercial code
4	Confirmation number and location
5	Circuit-breaker serial number
6	Features of the circuit-breaker

Packaging checks

Examine the state of the material received and verify that:

- The circuit-breaker or the fixed part are consistent with the order.
- The circuit-breaker or the fixed part are completely intact.

IMPORTANT:

- **check the material before any storage. For opening the packaging, follow the procedures outlined in the section "Unpacking and handling - opening the packages" on page** 10
- **in the case of inconsistencies report it within five days of receipt. See the paragraph "Damage and Discrepancy Report" in this chapter.**

Damage and Discrepancy Report

If there is any damage to the packaging upon receipt and / or inconsistencies between order and product identification label or product please contact ABB. Damage to the packaging must be reported no later than seven days from receipt of the material.

NOTE: *The notification must indicate the Packing List number.*

Storage method

Place the packaging (circuit-breakers and / or fixed parts) on a horizontal plane, not in contact with the floor. If the circuit-breaker has been removed and reinserted in the package ensure, prior to storage that:

- the circuit-breaker is in the open position and springs discharged. See the chapter "Description - circuit-breaker opening/closing operations" on page 15
- the circuit-breaker is protected and locked in its original packaging

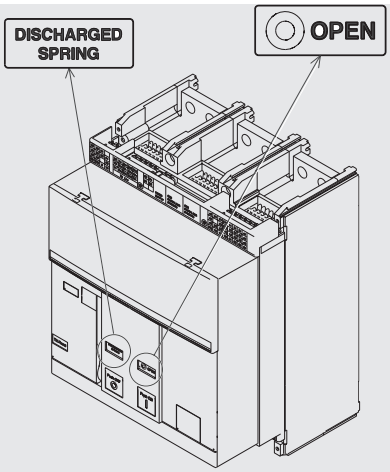

Figure 4

2 - Unpacking and handling

Opening the packaging

NOTE: *to unpack the circuit-breaker safely refer to the instruction sheet in the zipped packaging pouch.*

The following is the procedure for opening the packaging:

1. Cut the tape that seals the box. See Figure 5 and Figure 6.

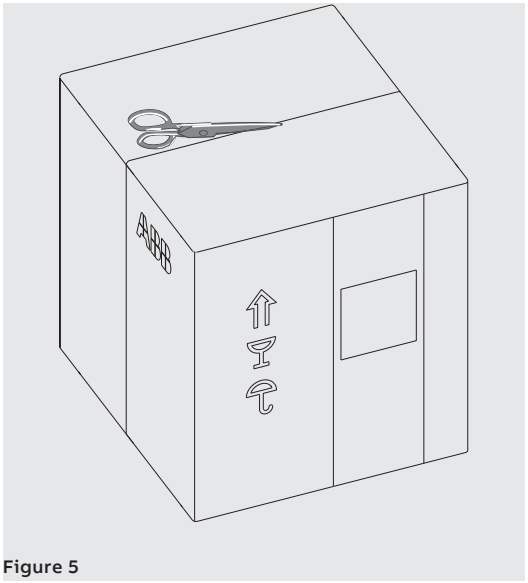

Figure 5

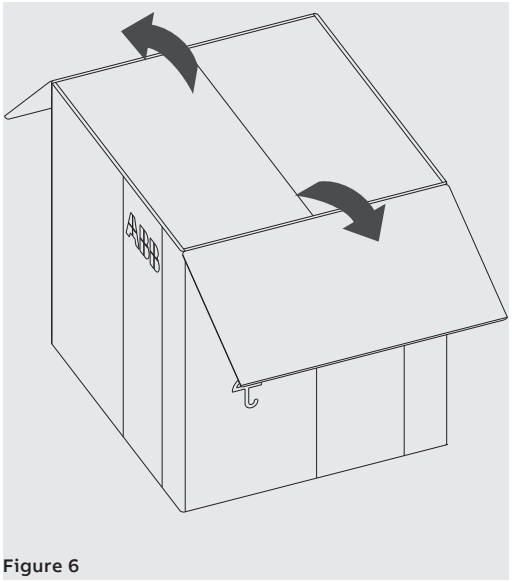

Figure 6

2. Open the upper part of the packing box and remove the upper containment protection. See Figure 7 and Figure 8.

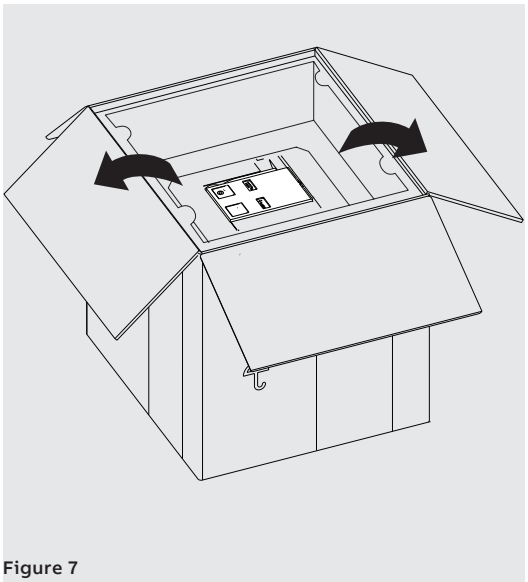

Figure 7

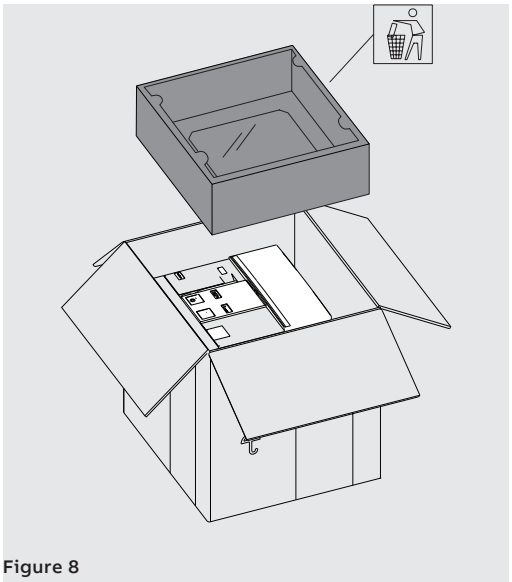

Figure 8

Continued on the next page

3. Remove the side containment protections from the packing box. See Figure 9.

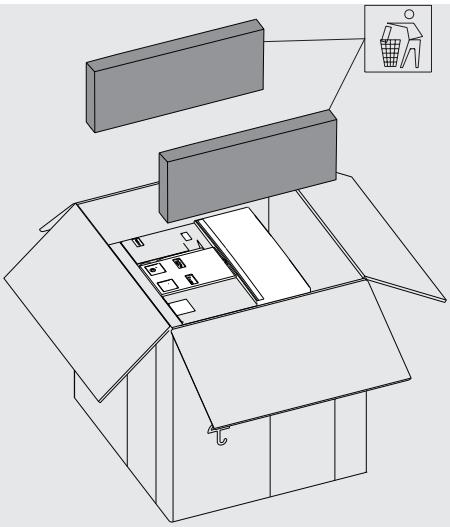

Figure 9

Weight of circuit-breakers without packaging

The following table specifies the weights of the circuit-breakers without packaging:

	Fixed		**Moving part of withdrawable device**		**Fixed part of withdrawable device**	
	III	IV	III	IV	III	IV
E1.2	14 Kg / 31 lbs	16 Kg / 35 lbs	18 Kg / 40 lbs	20 Kg / 44 lbs	20 Kg / 44 lbs	23 Kg / 51 lbs
E1.2-A	14 Kg / 31 lbs	16 Kg / 35 lbs	20 Kg / 44 lbs	22.5 Kg / 49 lbs	21 Kg / 46 lbs	24 Kg / 52 lbs

Disposal of packing materials

For disposal of the packaging materials see the chapter " 4 - Decommissioning and treatment at end of life " on page 50.

3 - Description

Description of circuit-breaker

Emax E1.2 circuit-breakers consist of a structure containing the poles, the operating mechanism and the auxiliary parts. Each pole, enclosed in a plastic box, consists of a breaking part and a current transformer.

The circuit-breaker is available in two types:

- fixed version
- withdrawable

The circuit-breaker in fixed version (see Figure 10) has its own terminals for connection to the power circuit.

The withdrawable circuit breaker consists of a mobile part (see Figure 11 for IEC and Figure 12 for UL) and of a fixed part (see Figure 13 for IEC and Figure 14 for UL) for connection through its own terminals to the power circuit.

The coupling between the mobile part and the fixed part is via disconnection contacts mounted on the fixed part.

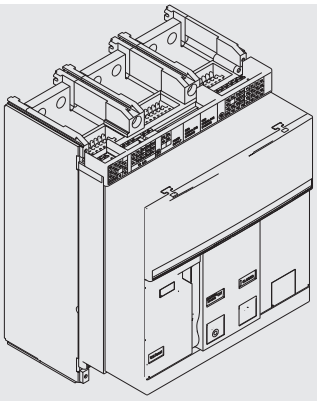

Figure 10

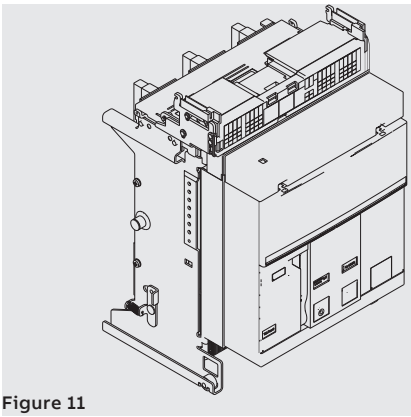

Figure 11

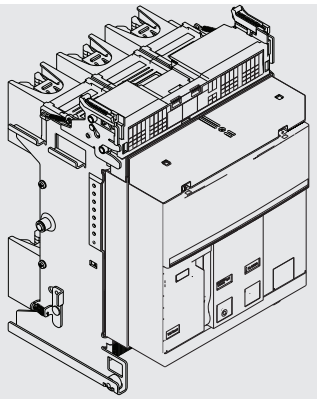

Figure 12

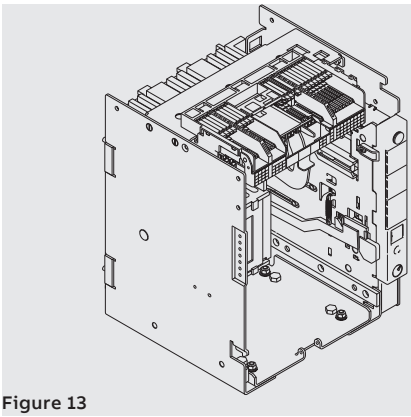

Figure 13

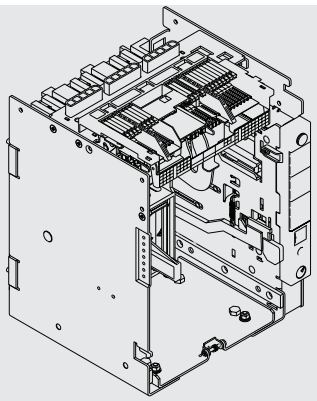

Figure 14

Description of the circuit-breaker front panel

The following are the main components of the circuit-breaker:

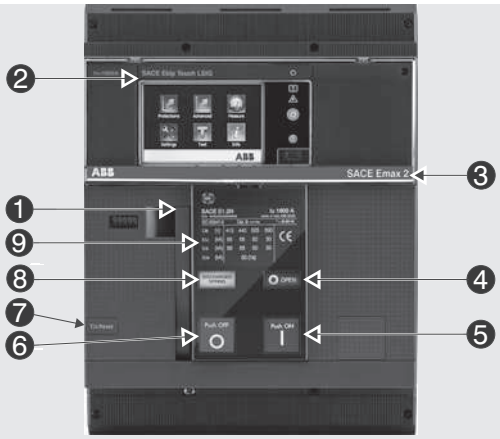

Figure 15

Pos.	Description
1	Lever for manually charging the closing springs
2	SACE Ekip protection trip unit
3	Name of the circuit-breaker
4	CB open (O) / closed (I) indicator
5	Closing pushbutton
6	Opening pushbutton
7	Mechanical signalling of tripped TU
8	Springs charged-discharged signalling device
9	Electrical data plate

Description of electrical data plate IEC

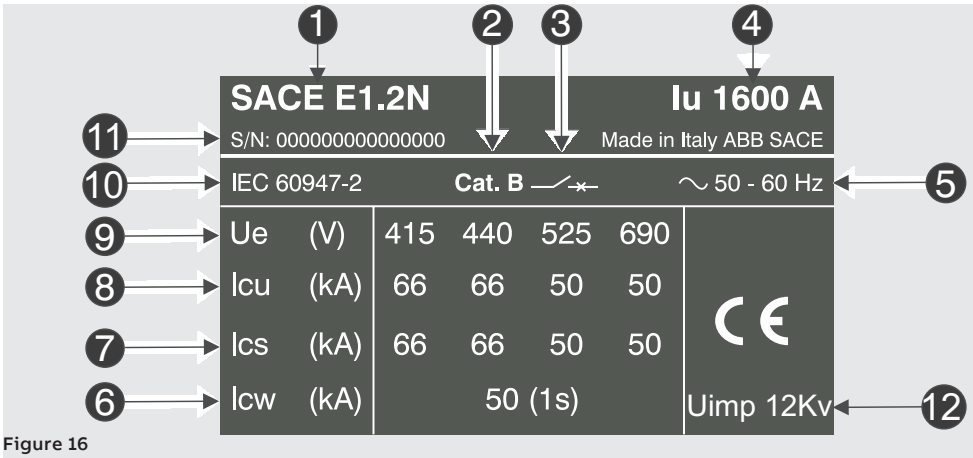

Figure 16

Pos.	Description
1	Type of circuit-breaker
2	Utilization category
3	Device type: Circuit-breaker or switch-disconnector
4	Rated current
5	Rated operating frequency
6	Admissible rated short-time current
7	Rated duty short-circuit breaking capacity
8	Rated ultimate short-circuit breaking capacity
9	Rated service voltage
10	Standards
11	Circuit-breaker serial number
12	Impulse voltage

Continued on the next page

Description of electrical data plate UL

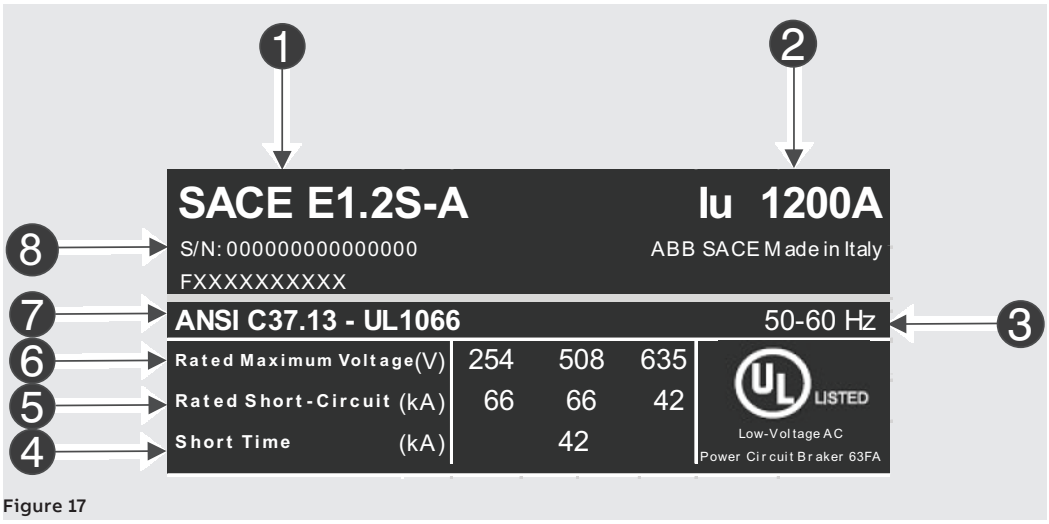

Figure 17

Pos.	Description
1	Type of circuit-breaker
2	Rated current
3	Rated operating frequency
4	Admissible rated short-time current
5	Rated short-circuit breaking capacity
6	Rated service voltage
7	Standards
8	Circuit-breaker serial number

Manual operations for opening and closing the circuit-breaker

The following is the sequence of steps for closing and opening the circuit-breaker:

1. Check that the circuit-breaker is open (open / closed indicator "O - OPEN"), and check that the springs are discharged (spring signalling device "white - DISCHARGED SPRING") as indicated in Figure 18.
2. Charging the springs - Pull the lever [A] downwards several times until the springs charged signalling device [B] is “yellow - CHARGED SPRING” as indicated in Figure 19.

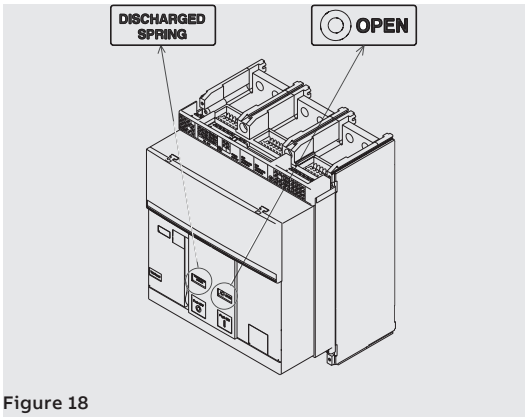

Figure 18

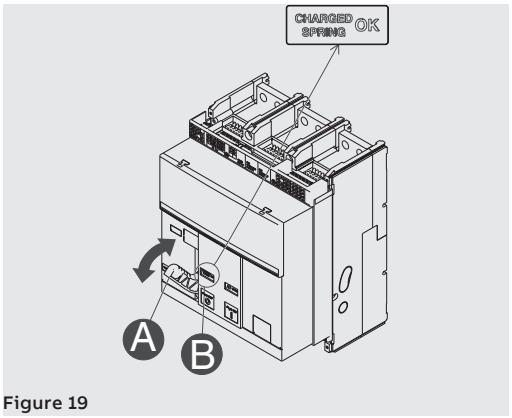

Figure 19

3. Check that the circuit-breaker is open (open/closed signalling device “O - OPEN”), and check that the springs are charged (springs signalling device “yellow - CHARGED SPRING”) as indicated in Figure 20.
4. Closing - Press the closing pushbutton “I - Push ON” as indicated in Figure 21.

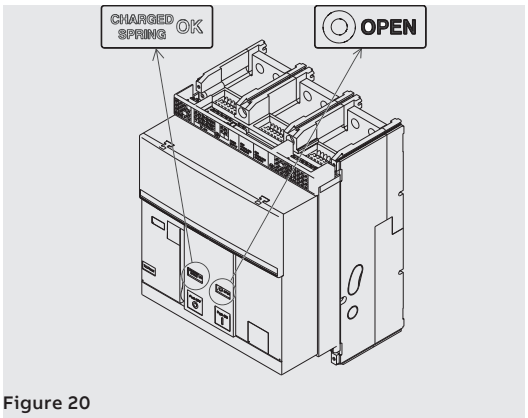

Figure 20

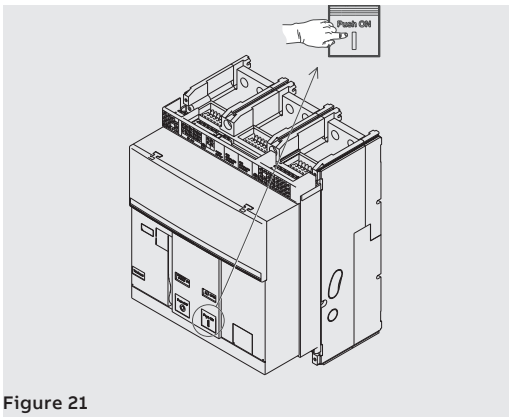

Figure 21

5. Check that the circuit-breaker is closed (open/closed indicator "I - CLOSED"), and check that the springs are discharged (spring signalling device "white - DISCHARGED SPRING" as indicated in Figure 22.
6. Opening - Press the opening pushbutton “O - Push OFF” as indicated in Figure 23.

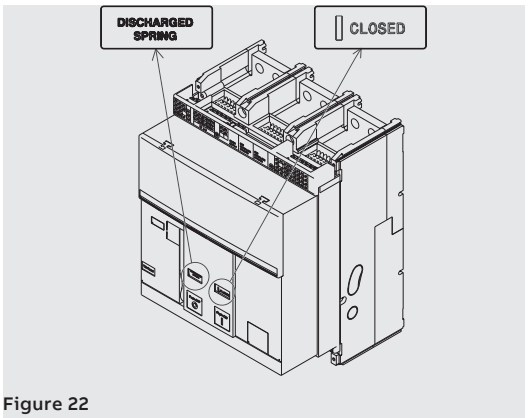

Figure 22

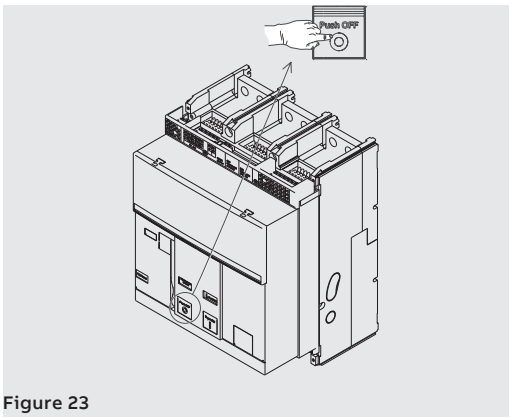

Figure 23

Continued on the next page

7. Check that the circuit-breaker is open (open / closed indicator "O - OPEN"), and check that the springs are discharged (spring signalling device "white - DISCHARGED SPRING") as indicated in Figure 24.

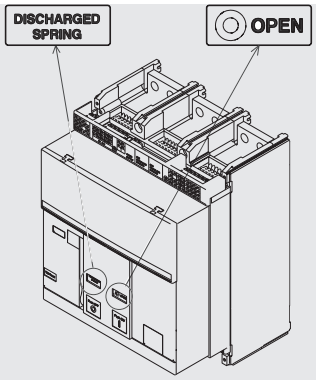

Figure 24

Mechanical status indicators

The following are the possible states in which you can find the circuit-breaker:

1. Circuit-breaker open with springs discharged (see Figure 25).
2. Circuit-breaker open with springs charged (see Figure 26).
3. Circuit-breaker closed with springs discharged (see Figure 27).
4. Circuit-breaker closed with springs charged (see Figure 28). This state occurs when after closing (see step 4 - Figure 28) the springs are recharged manually or automatically by the gearmotor (if provided).

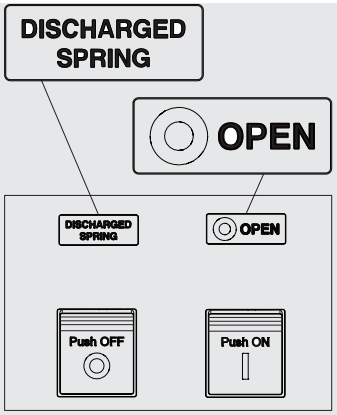

Figure 25

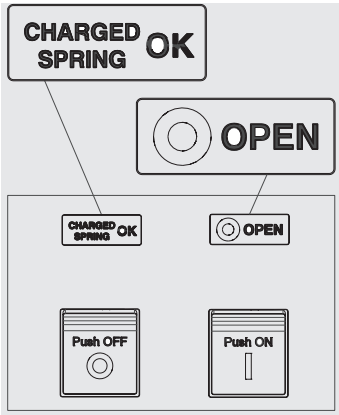

Figure 26

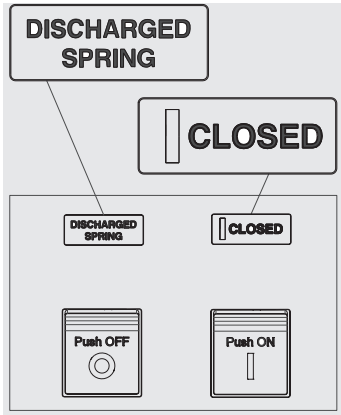

Figure 27

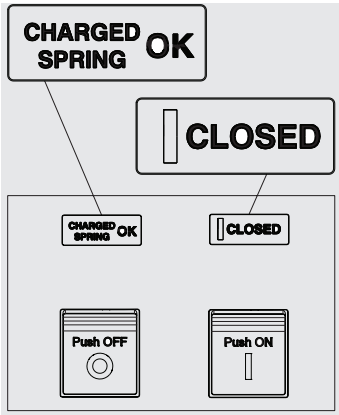

Figure 28

Circuit breaker racking-in/ racking-out operations

The following is the procedure for the insertion of the moving part in the fixed part:

WARNING!

- **Make sure the circuit-breaker is disconnected from all sources of energy.**
- **Switch the circuit-breaker to the open position with springs discharged.**

WARNING! Before proceeding, remove all equipment used during the work and remove processing waste and materials used.

1. Turn plate through 90° before inserting the moving part.

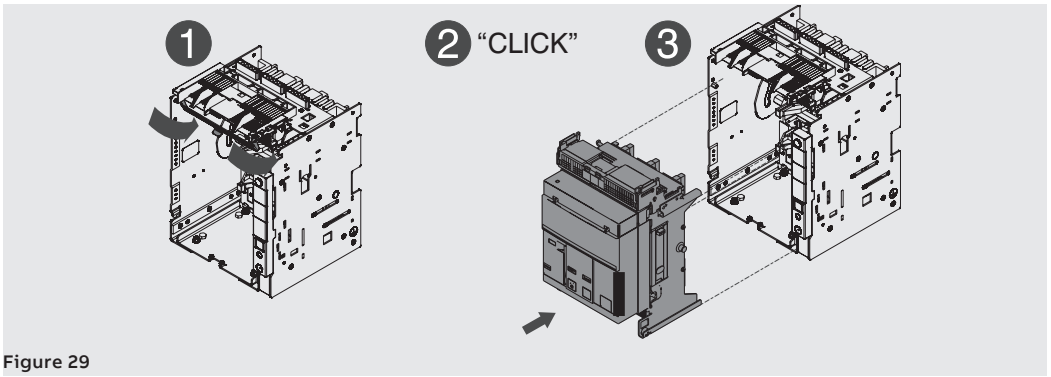

Figure 29

2. Make sure that signalling device on the fixed part indicates the **DISCONNECT** position. See Figure 30.

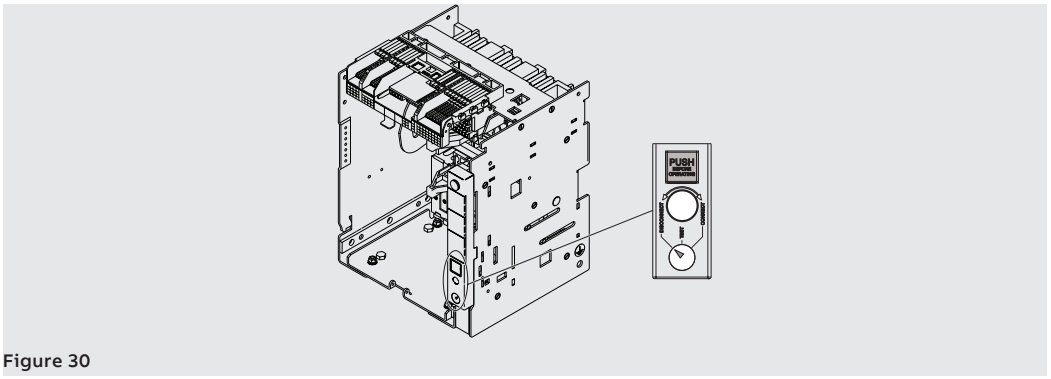

Figure 30

3. Position the moving part in the fixed part and push until it comes to a stop. See Figure 31 and Figure 32.

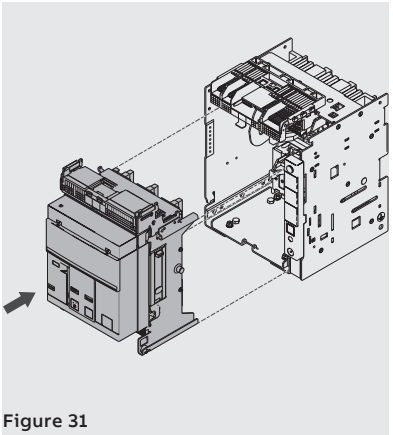

Figure 31

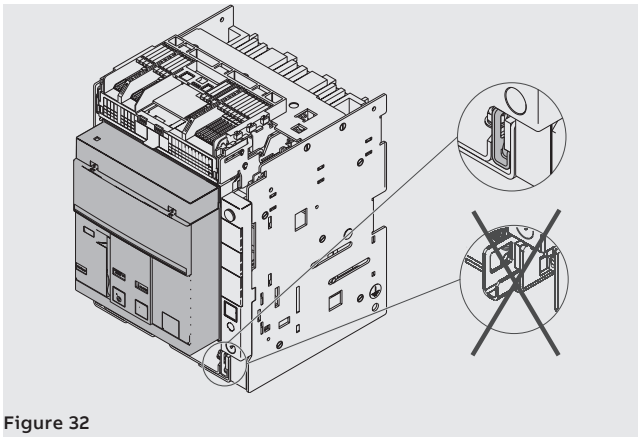

Figure 32

Continued on the next page

4. Extract the disconnection crank from its housing See Figure 33.
5. Press the lock pushbutton and fit the handle into the moving part. In this phase, the moving part will still be in the **DISCONNECT** position. See Figure 34.

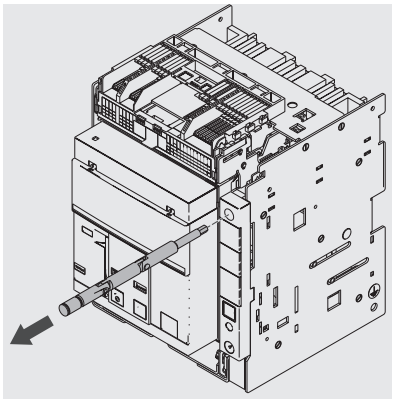

Figure 33

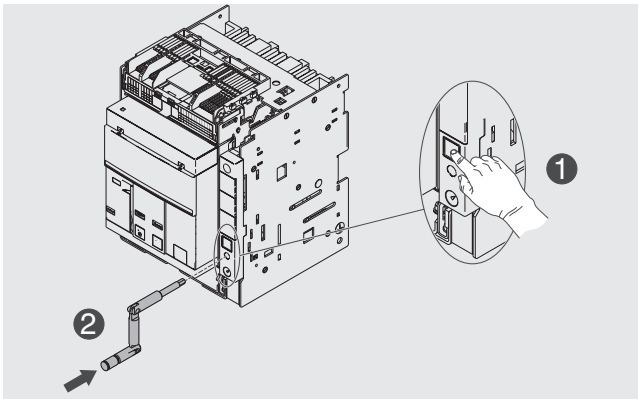

Figure 34

6. Keep breaker pushed. Turn the crank clockwise until the pushbutton comes out and the indicator shows that the circuit-breaker is in **TEST** position. See Figure 35.

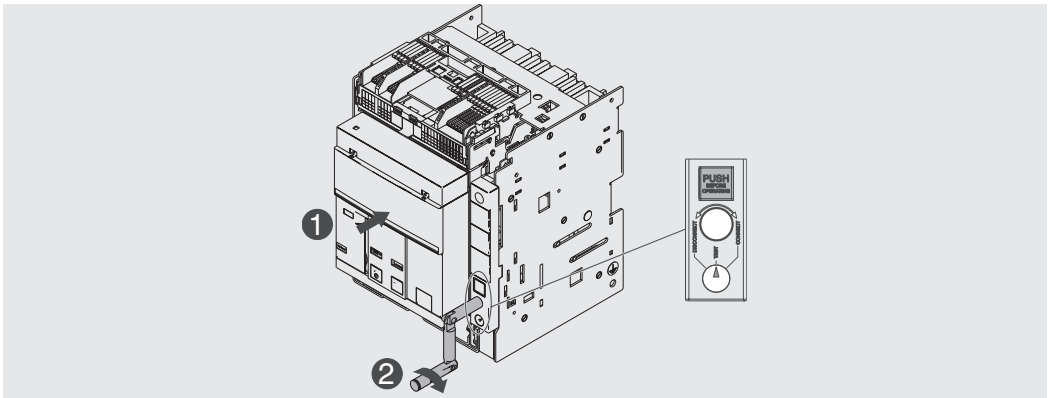

Figure 35

7. Press the lock button and then rotate the crank clockwise until the button comes out and the indicator shows that the circuit-breaker is in the **CONNECT** position. See Figure 36.

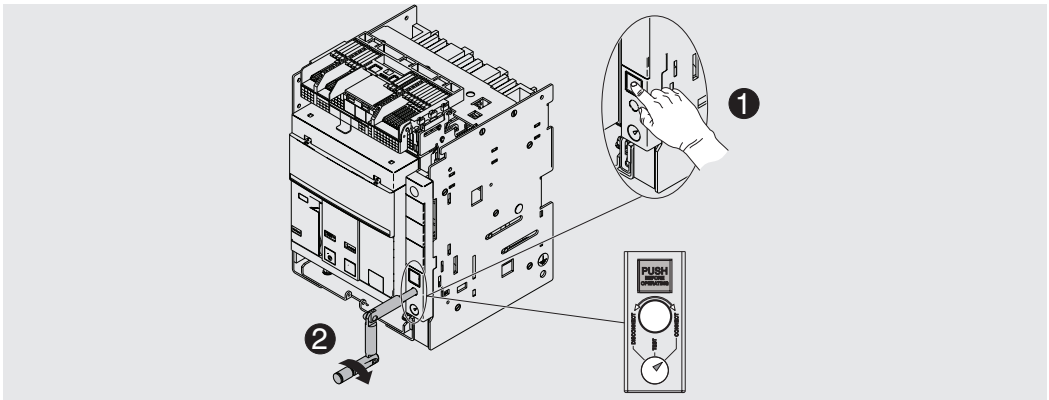

Figure 36

Continued on the next page

8. Extract the crank. See Figure 37.
9. Replace the crank in its housing See Figure 38.

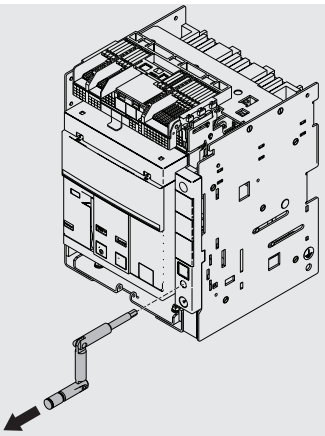

Figure 37

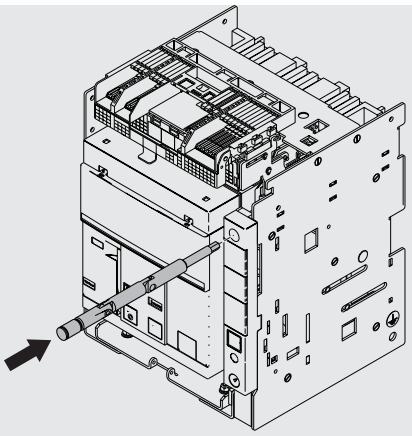

Figure 38

To extract the moving part from the fixed part, perform the same steps indicated for insertion in reverse order.

After extraction, in order to remove the moving part, unlock the safety lock. See Figure 39.

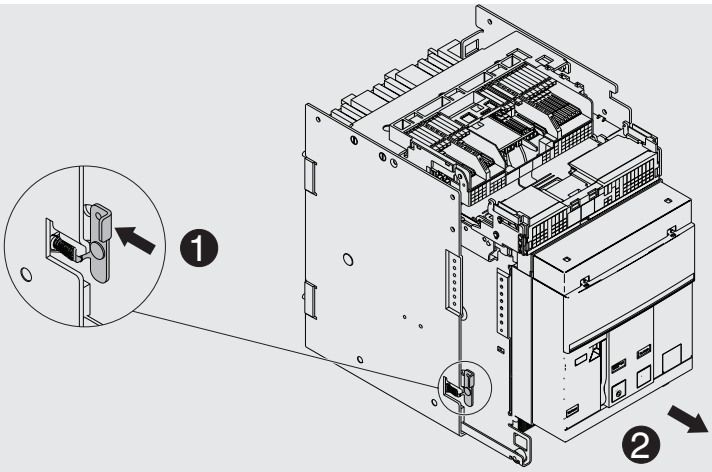

Figure 39

⚠ **WARNING! The inserted circuit-breaker must be opened in order to be able to reach the test position. On the UL version, the fail safe prevents the removal of the circuit-breaker from the fixed part with springs charged. Discharge the springs before removing the circuit-breaker from the fixed part. For further details, consult the Mechanical safety accessories chapter in the document 1SDH001330R1002.**

Mechanical position indicators

The following are the possible positions where you can find the mobile part of a withdrawable circuit-breaker during its use:

- circuit breaker in DISCONNECT position (see Figure 40).
- circuit-breaker in test position (see Figure 41).
- circuit-breaker in CONNECT position (see Figure 42).

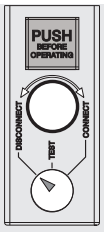

Figure 40

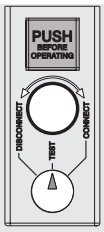

Figure 41

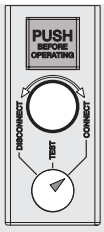

Figure 42

4 - Environmental conditions

Details related to this chapter are available in the manual **1SDH001330R1002** (Emax 2 engineering manual) available on the website ABB library.

5 - Installation

Warnings and precautions before the installation

The following warnings and precautions must be respected before installing the circuit-breaker in the switchgear

WARNING!

- **Disconnect the power from the circuit-breaker (power circuit and auxiliary circuits)**
- **Make sure the circuit-breaker is disconnected from all sources of energy**
- **Switch the circuit-breaker to the open position with springs discharged**

NOTE: *The trained personnel in charge of handling and lifting must use appropriate safety equipment.*

Mounting of the fixed circuit-breaker

Fix the circuit-breaker to a horizontal surface using four M5 x 25 screws (see Figure 43). Lock the screws with tightening torque 4 Nm - 35 lb in.

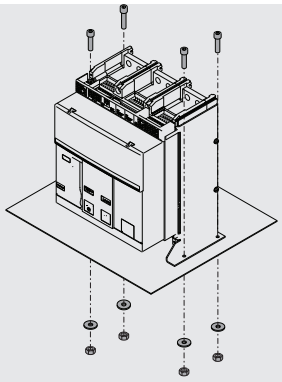

Figure 43

Mounting anti-insertion locks

Before installing the fixed part it is necessary to fit the lock that prevents the insertion of circuit-breakers into fixed parts with different electrical characteristics (see Figure 44).

Information on the assembly is available on the website http://www.abb.com/abblibrary/DownloadCenter/, in particular with the kit sheet **1SDH000999R0701**.

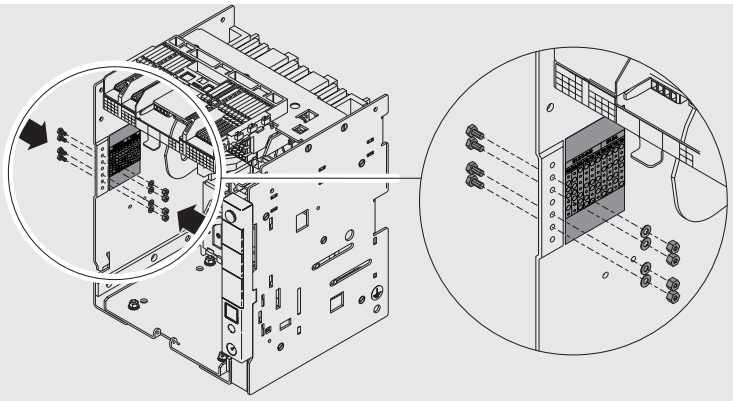

Figure 44

Mounting the fixed part of the withdrawable circuit-breaker

Fix the fixed part to a horizontal surface using four M8 x 25 screws (see Figure 45). Tighten the screws with tightening torque = 21 Nm - 186 lb in.

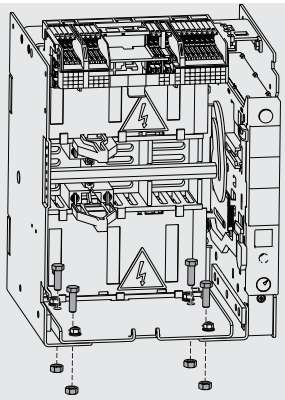

Figure 45

Types of terminal

The following are the different types of terminal:

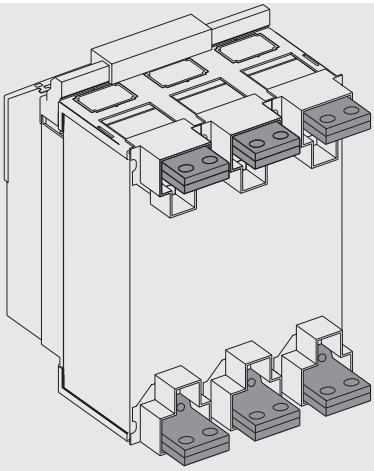

Figure 46 - F - HR - Horizontal rear IEC

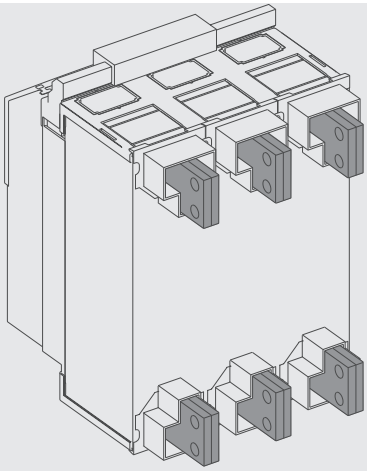

Figure 47 - F - VR - Vertical rear IEC

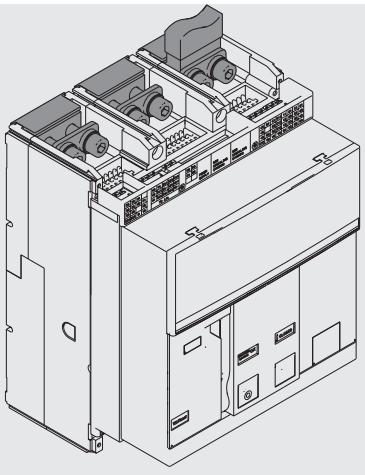

Figure 48 - F - F - Front IEC-UL

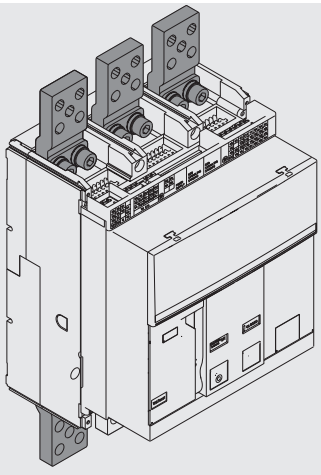

Figure 49 - F - EF - Extended front IEC-UL

Continued on the next page

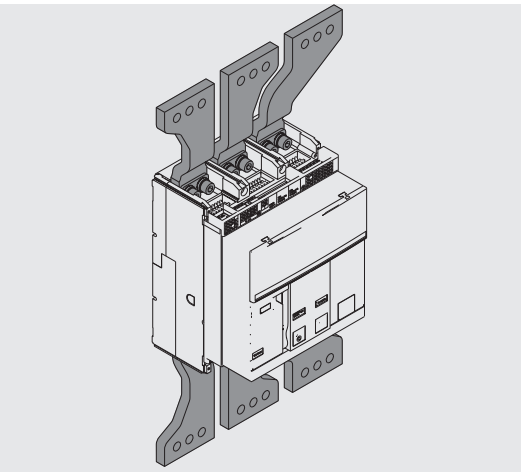

Figure 50 - F - ES - Spread front IEC-UL

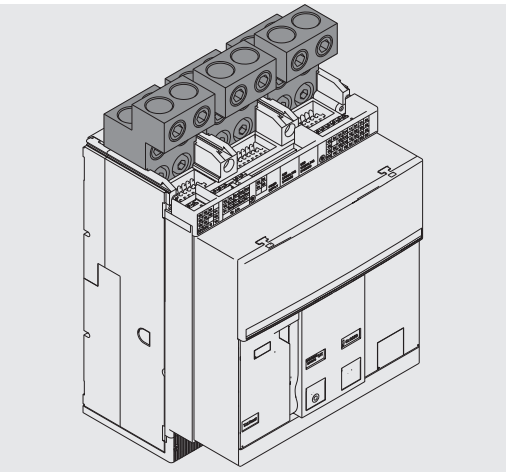

Figure 51 - F - FC - Terminals for cables IEC-UL

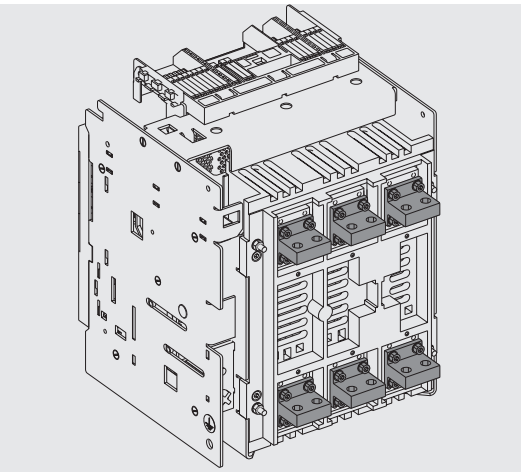

Figure 52 - W - HR - Horizontal rear IEC

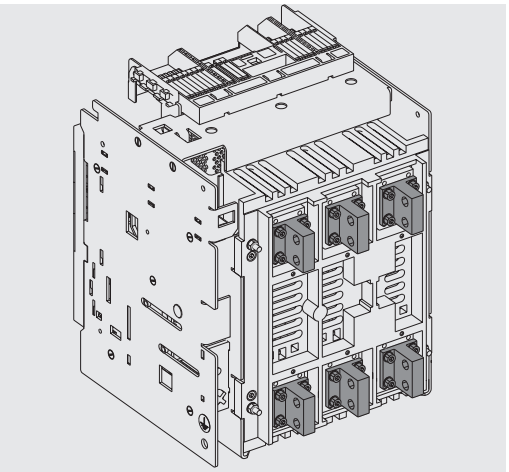

Figure 53 - W - VR - Vertical rear IEC

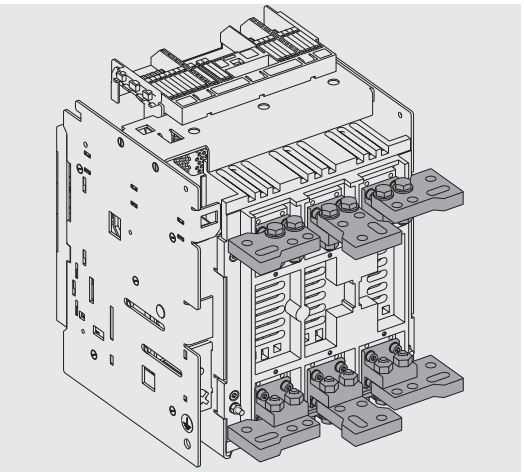

Figure 54 - W - SHR - Spread horizontal rear IEC

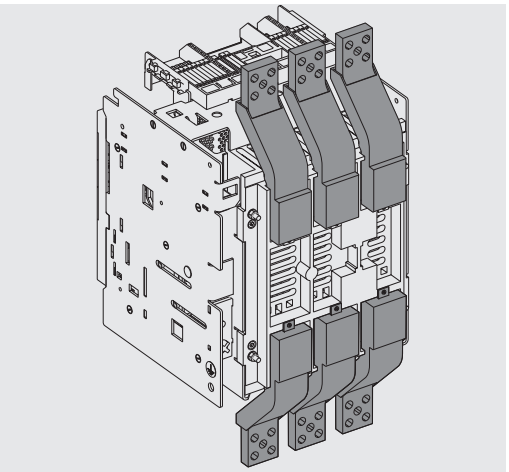

Figure 55 - W - EF - Extended front IEC-UL

Continued on the next page

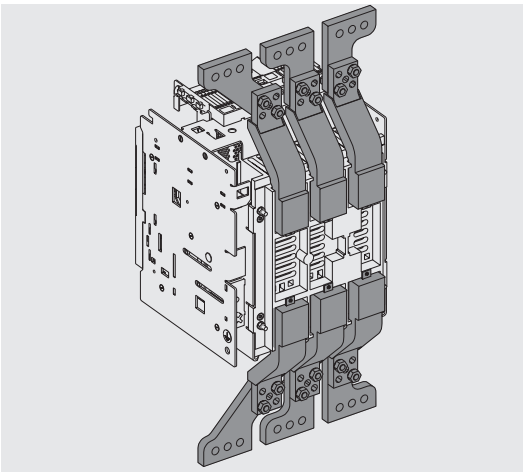

Figure 56 - W - ES - Spread front IEC-UL

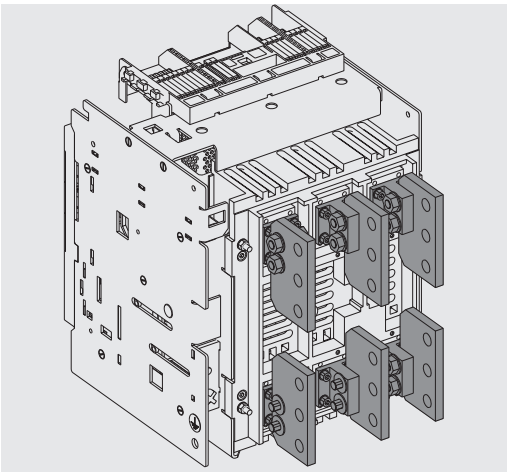

Figure 57 - F - FC - Terminals for cables IEC-UL

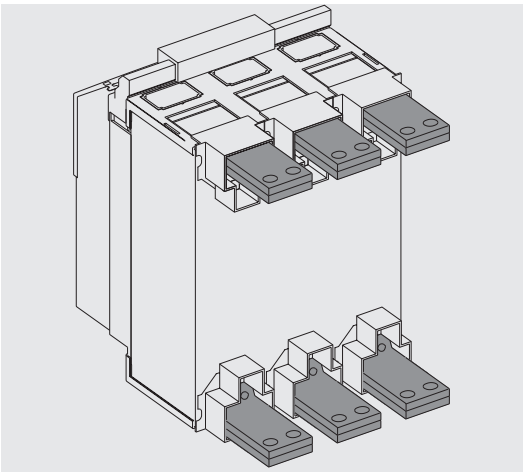

Figure 58 - F - HR - Horizontal rear UL Listed

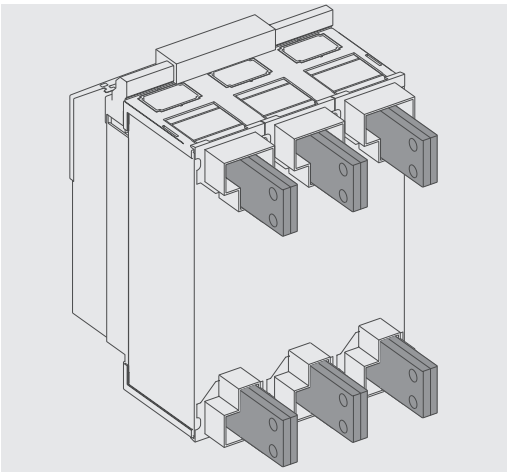

Figure 59 - F - VR - Vertical rear UL Listed

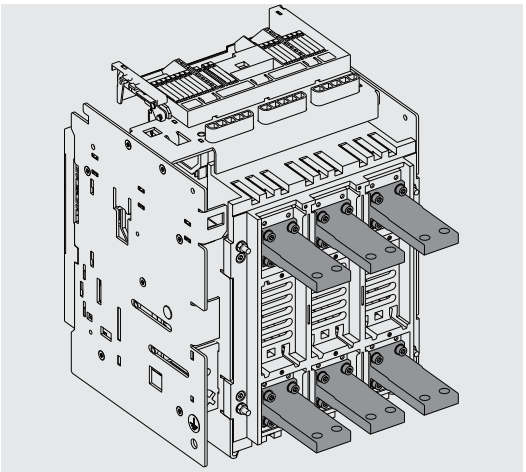

Figure 60 - W - HR - Horizontal rear UL Listed

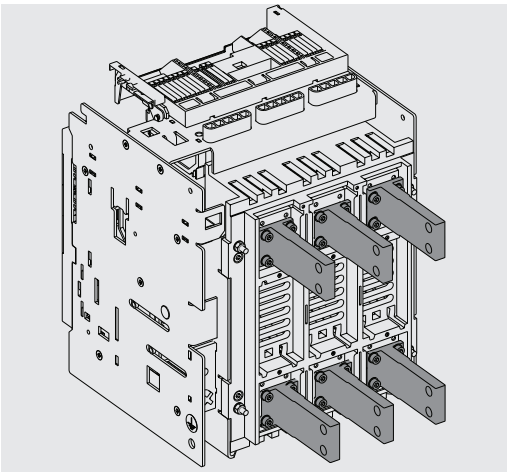

Figure 61 - W - VR - Vertical rear UL Listed

Change of position of the vertical/horizontal terminals

If the circuit-breaker is supplied equipped with terminals of the horizontal/rear type, it is possible at any moment to switch from horizontal to vertical and vice versa. (see Figure 62 and Figure 63). Lock the screws with tightening torque 20 Nm - 177 lb in.

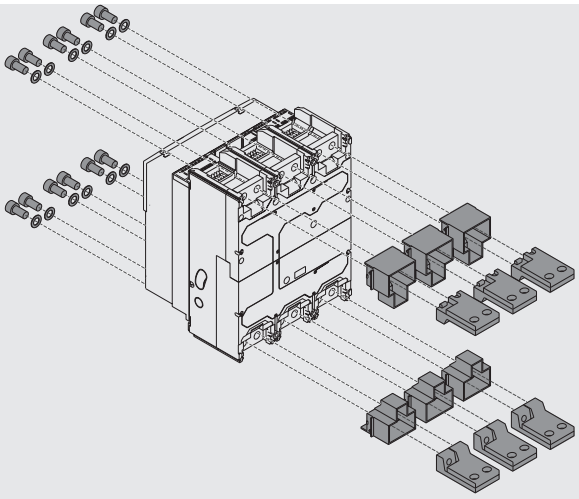

Figure 62

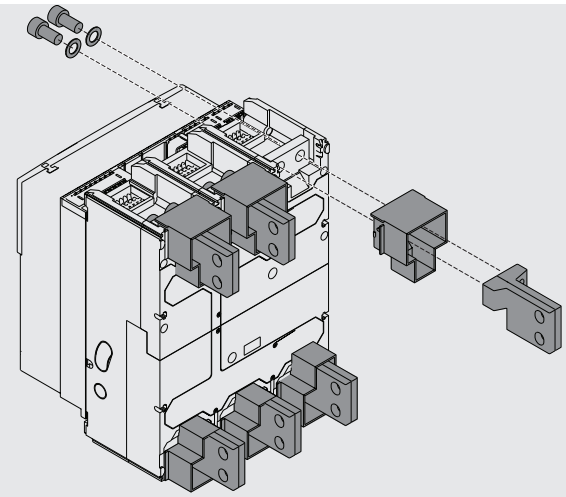

Figure 63

Connection to the power circuit

A circuit-breaker is connected to the power circuit using the connection busbars of the switchboard fixed to the circuit-breaker terminals.

Emax 2 circuit-breakers are tested in accordance with standards IEC 60947.2-3 and UL 1066.

The switchboard designer is responsible for busbar sizing, which must be validated by application of the tests provided for by the pertinent standards.

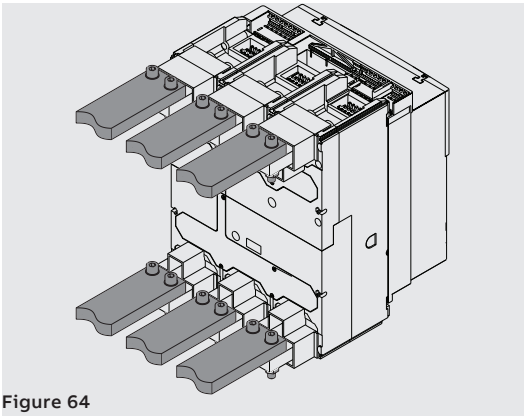

Figure 64

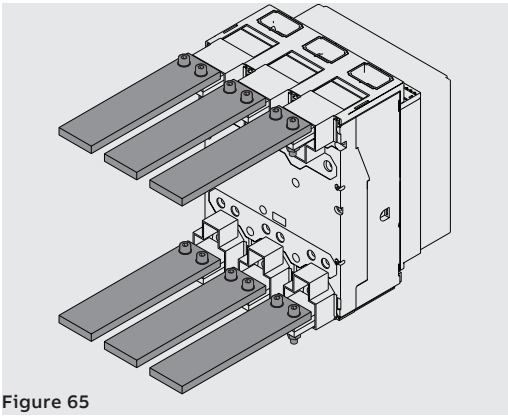

Figure 65

IMPORTANT: it is possible to obtain different capacities for the connections by altering the thickness and number of busbars in parallel.

The following tables provide some examples of the quantity and the sizes of the connections that can be used for each type of circuit-breaker:

circuit-breaker IEC 60947	Iu (A)	Dimension of busbars (mm)	
		Horizontal terminals	Vertical terminals
E1.2	630	2x40x5	2x40x5
E1.2	800	2x50x5	2x50x5
E1.2	1000	2x50x10	2x50x8
E1.2	1250	2x50x10	2x50x8
E1.2	1600	3x50x8	2x50x10

circuit-breaker UL 1066	Iu (A)	Horizontal terminals		Vertical terminals	
		Q.ty	Dimension of busbars (in)	Q.ty	Dimension of busbars (in)
E1.2-A	800	2	1/4 x 2	1	1/4 x 3
E1.2-A	1200	4	1/4 x 2	2	1/4 x 3

Continued on the next page

IMPORTANT: Before proceeding with the connection between terminals and connection busbars:

- **make sure that the contact surfaces of the busbars are free of burrs, dents, traces of rusting, dust or traces of grease.**
- **make sure, if aluminium busbars are used, than they are tin plated in the contact areas.**
- **make sure that the busbars do not exert forces in any direction on the terminal.**
- **for tightening use M10 screws with resistance class 8.8 equipped with spring washers and lock them with a torque of 45 Nm - 400 lb in.**

Overall dimensions

Information on the overall dimensions is available on the website:

http://www.abb.com/abblibrary/DownloadCenter/.

The following drawings are also available in .dxf format:

- 1SDH000999R0101 - E1.2 III-IV Fixed F EF IEC-UL
- 1SDH000999R0102 - E1.2 III-IV Fixed FC IEC-UL
- 1SDH000999R0103 - E1.2 III-IV Withdrawable EF IEC-UL
- 1SDH000999R0104 - E1.2 III-IV Withdrawable ES IEC-UL
- 1SDH000999R0105 - E1.2 III-IV Withdrawable SHR IEC
- 1SDH000999R0106 - E1.2 III-IV Withdrawable FC IEC
- 1SDH000999R0107 - E1.2 III-IV Fixed HR-VR Positionable IEC
- 1SDH000999R0108 - E1.2 III-IV Fixed ES IEC-UL
- 1SDH000999R0109 - E1.2 III-IV Withdrawable HR-VR IEC
- 1SDH000999R0120 - E1.2 Flange Fixed Withdrawable IEC-UL
- 1SDH000999R0121 - E1.2 Floor mounting IEC-UL
- 1SDH000999R0303 - E1.2 III-IV Withdrawable Rear Terminals HR-VR UL
- 1SDH000999R0307 - E1.2 III-IV Fixed Rear Terminals HR-VR UL

Positioning anchor plates

The diagram below indicates the distance for positioning the first anchor plate according to the circuit-breaker type and the peak current:

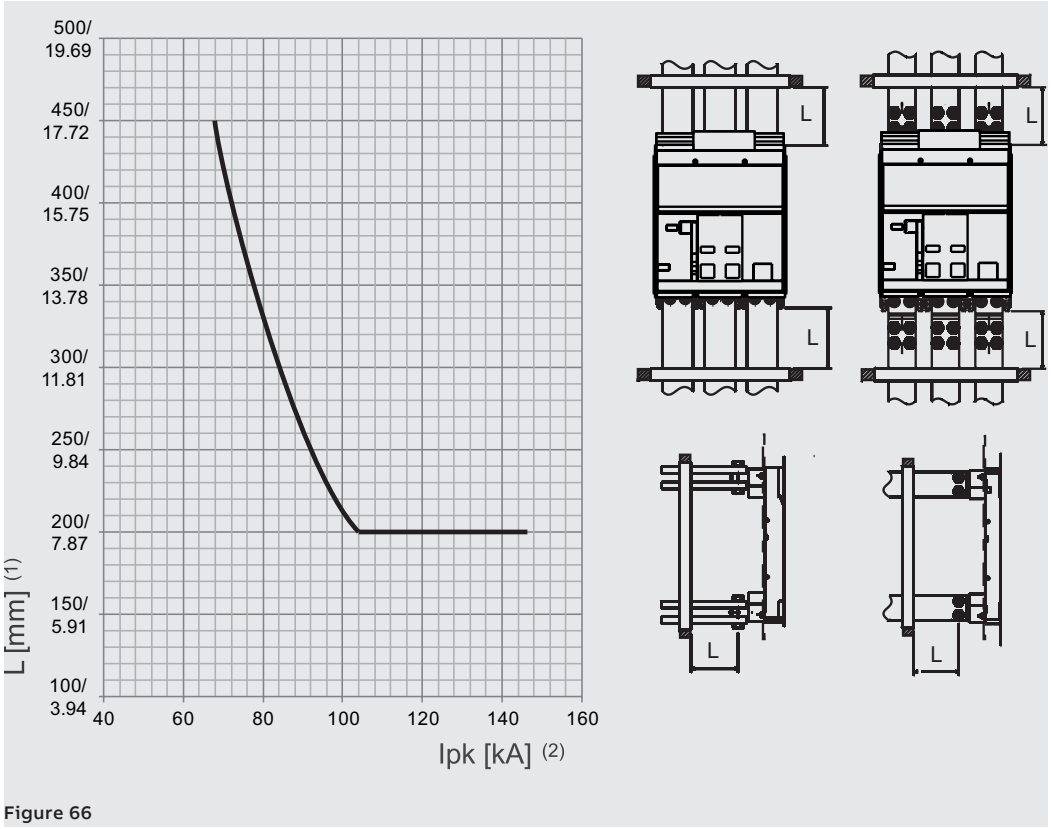

Figure 66

(1): distance of the first anchor plate from the circuit-breaker terminals
(2): peak current

>690V version IEC circuit-breakers

>690V disconnectors and circuit-breakers are available in the following configurations:

Circuit-breaker	Voltage	Version
E1.2/E9	800 V	F (1)-W (2)

(1) Mandatory provision with front terminals (F) and high terminal covers (HTC)
(2) Mandatory provision with positionable rear terminals (HR/VR) and phase separators (PB)

Grounding

The fixed part of withdrawable circuit-breakers has a screw for the earth connection.

The connection must be implemented by means of a conductor of suitable cross-section according to the IEC 61439-1 Standard.

Clean and degrease the area around the screw before making the connection.

After assembly of the conductor, tighten the screw with a torque of 2 N m - 17.7 lb in.

Alternatively, no connection will be required if circuit-breaker frame continuity with the switchgear earthing is provided by the metal contact (support) between the circuit-breaker and the metal structure of the switchgear (or a part of the protection circuit) (as long as there are no insulating panels between the circuit-breaker and the metal frame of the switchgear).

The fixed circuit-breaker version does not need an earth connection.

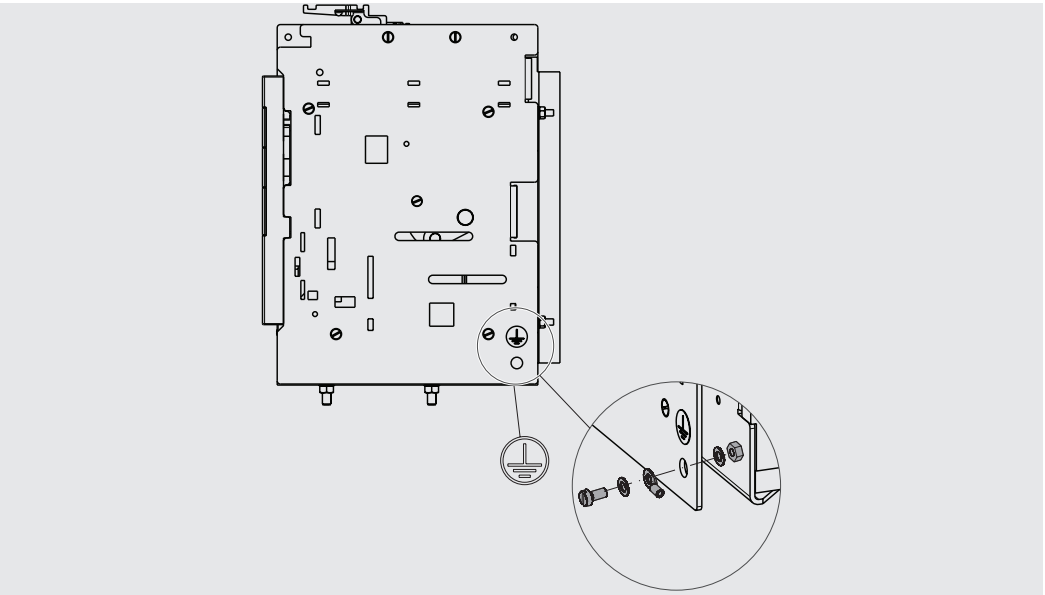

Figure 67

Ekip Dip

1 - General characteristics

Versions and main functions

SACE Emax 2 can be configured with the Ekip Dip Trip unit. This unit is available in three versions (Ekip Dip LI, Ekip Dip LSI, Ekip Dip LSIG) and can support and provide various functionalities:

- *protections for current and other quantities*
- *measurements, historical data and operation counters*
- *trip unit test*
- *interfacing with support software for configuring and customizing additional parameters*
- *mechanical accessories, electronic and test.*

Detailed information is available in the manual **1SDH001330R1002**.

Electrical characteristics

The Ekip Dip measurement and protection functions described in this document are guaranteed with current values within the following nominal ranges:

Parameter	Rated operating range
Primary current	0,004 ÷ 16 In [1]
Rated frequency	45 ... 55 Hz (with fn= 50 Hz) / 54 ... 66 Hz (with fn= 60 Hz)
Peak factor	Complying with standard IEC 60947-2

[1] range with reference to each phase; In refers to the rated size defined by the Rating plug installed on the Trip unit, available in models from 100 A to 6300 A

Self-supply

The internal current sensors are able to supply the Trip unit directly

Parameter	Operating limits
Minimum three-phase turn-on current	> 30 A (with Rating Plug < 400 A)
	> 80 A (with Rating Plug ≥ 400 A)

Auxiliary power supply

Ekip Dip can be connected to an external auxiliary supply source, which is useful when certain functions such as communication via Local Bus, recording manual operations, certain measurements and the datalogger must be activated.

Auxiliary power supply can be provided by modules from the Ekip Supply range or by direct connection to the terminal box; a direct connection can also be made. Details are available in the manual **1SDH001330R1002**.

2 - Operator interface

Introduction

The operator interface of the Ekip Dip protection release allows you to:

- Set the parameters relating to the available protections.
- View the status of the trip unit and alarms.
- Connect to the frontal connector to communicate and perform the opening test.

Components of the interface

The Ekip Dip operator interface appears as follows:

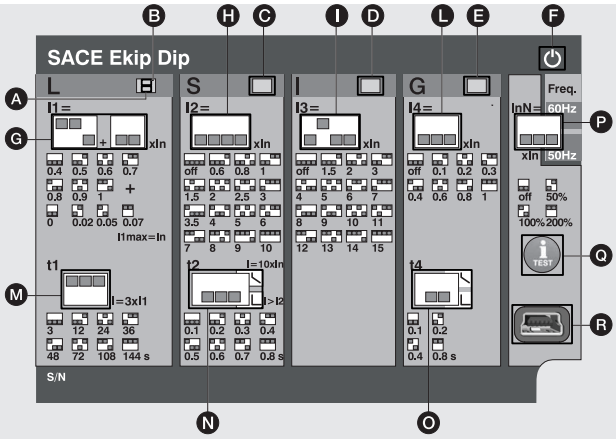

Figure 68

The following table provides a description of the components of the interface:

Position	Type	Description
A	**LED**	L Protection LED (alarm and trip)
B		L Protection LED (pre-alarm)
C		S Protection LED (alarm and trip)
D		I Protection LED (trip)
E		G Protection LED (alarm and trip)
F		Power-on LED (trip unit powered and on)
G	**Protections: thresholds**	L Protection dip-switch (threshold I1)
H		S Protection dip-switch (threshold I2)
I		I Protection dip-switch (threshold I3)
L		G Protection dip-switch (threshold I4)
M	**Protections: times**	L Protection dip-switch (time t1)
N		S Protection dip-switch (time t2 and type of curve)
O		G Protection dip-switch (time t4 and type of curve)
P	**Settings**	Neutral and frequency dip-switch
Q	**Test**	Test pushbutton
R		Test connector

IMPORTANT: the figure above refers to an Ekip Dip, LSIG version. In the case of Ekip Dip LI or LSI versions, LEDs and dip-switches related only to the protections present are available.

LED

The LEDs are useful on Ekip Dip in order to distinguish and identify various types of information on the protection trip unit, the circuit-breaker and state of the line currents.

The LEDs combined with the protections provide various information, through different combinations of lighting and blinking.

NOTE: *all the combinations related to protection LED signals are described in chapter* **Self-diagnosis and signalling** *, on page* **38.**

Protections: Thresholds and timing

The thresholds of all the protections can be modified with various dip-switches, as specified on the serigraph of the interface.

The values of the protections make reference to the current In, a nominal value defined by the Rating Plug.

The times and the curves of the protections can be modified with various dip-switches, as specified on the serigraph of the interface.

IMPORTANT:

- **Changes to the thresholds and times must be made in the absence of protection alarms.**
- **Modifications carried out in alarm conditions are accepted by the trip unit when resting condition is restored (absence of protection alarms).**

Settings

Two further settings are available:

- **Neutral** allows activation and adjustment of the protections on the neutral pole.
- **Frequency** allows the selection of the installation frequency.

iTest pushbutton

The iTest pushbutton is useful for three operations:

- Perform tests (circuit-breaker opening test and LED test).
- Reset the signal of the tripped protection. This operation can be performed when the circuit-breaker is both open and closed and with currents present, by pressing the push-button for about 1 second (the signal disappears when the push-button is released).
- With the trip unit off, check the information relating to the switch-off or tripping event.

NOTE: *with the trip unit off, pressing of the iTest button switches on (for approximately 4 seconds):*

- the power-on LED, if the trip unit is off due to an energy drop (primary current less than the minimum level of operation, removal of auxiliary power supply with circuit-breaker open, etc...).
- the protection tripped LED if the trip unit is off due to a protection trip.

Test connector

The test connector allows the connection of Ekip TT and Ekip T&P modules (purchased separately), in order to perform the following operations:

- The release can be provided with temporary power supply for state verification and conduction of trip tests and LED tests (option available with all front interface modules).
- Analysis, supervision and setting of additional parameters through external communication test units (Ekip T&P).

3 - Protections - Introduction

Operating principle

The protection functions are available with all Ekip Dip versions.

1. If the signal measured exceeds the set **threshold**, the specific protection activates (prealarm and/or **alarm** condition).
2. The **alarm** appears on the display and, after a period of time (timing t_t), depending on the protection parameters set, can convert into a **trip command (TRIP)** transmitted to the internal Trip Coil of the CB.

NOTE:

- if the signal measured drops below the set threshold before the trip time has elapsed, Ekip Dip quits the alarm and/or timing state and returns to the normal operating condition
- all protections have a default configuration: check the parameters and change to suit the installation requirements before putting into service
- to allow circuit-breaker tripping to be controlled by a specific protection, the protection itself must be enabled

L Protection

L protection protects against overloads

NOTE: *the protection is available and active for all the versions of the trip unit.*

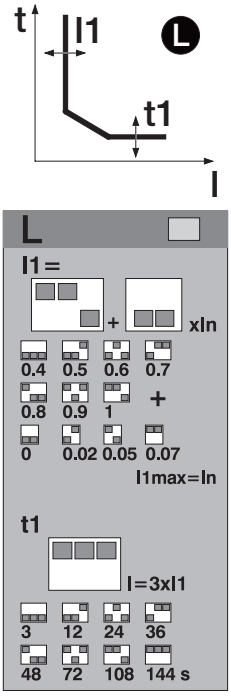

When the activation threshold is exceeded, the protection trips in a time that decreases as the current read increases.

Parameters

All the parameters that can be modified by the user affect the response curve, and related tripping times.

Parameter	Description
Threshold I1	The value I1 contributes in calculating the tripping time, and also defines the current value that, if exceeded, activates the protection (with reference to the curve, it is the part parallel to the y-axis). **IMPORTANT:** **• The protection is activated and starts timing for currents between 1.05 and 1.2 of the threshold I1 set** [(1)]. **• The delay is interrupted if the current drops below the activation threshold.**
Time t1	The value t1 contributes in calculating the tripping time (with reference to the curve, T1 affects the entire curve by shifting it as a whole along the y-axis). **IMPORTANT:** **The protection limits the tripping time to 1 second in two cases:** **• if, according to the calculation, the time is less than 1 second.** **• If the fault current is greater than 12 In.**

[(1)] *Example (with I1 set to 400 A): the protection is activated for currents between 420 A and 480 A.*

With the module Ekip T&P and with the Ekip Connect software, it is possible to activate the function **Thermal Memory**, and adjust the threshold of **Pre-alarm**.

S Protection

S protection protects against selective short circuit.

NOTE: *the protection is available for LSI and LSIG versions of the trip unit.*

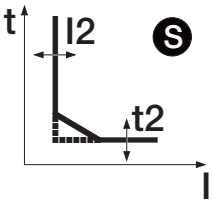

When the activation threshold is exceeded, the protection trips within a fixed or dynamic time (the time decreases as the current reading increases).

Parameters

All the parameters that can be modified by the user affect the response curve, and related tripping times.

Parameter	Description
Enable	By setting the threshold dip-switches to the Off position, the protection is disabled.
Type of curve	It determines the dynamic of the curve and the tripping time, fixed or dynamic according to the selection: **NOTE:** calculation of the tripping time of the inverse time curve is based on a mathematical expression. The details are provided in the table on page37.
Threshold I2	It defines the current value that activates the protection when exceeded (with reference to the curve, it is the part parallel to the y-axis). **IMPORTANT:** **• The I2 threshold set must be higher than the I1 threshold. An incorrect configuration returns an alarm signal.** **• The delay is interrupted if the current drops below the activation threshold.**
Time t2	The selected function determines the contribution of t2: • Fixed time: t2 is the delay time between exceeding the I2 threshold and sending the opening command. • Dynamic time: t2 contributes in calculating the tripping time (with reference to the curve, t2 affects the entire curve, shifting it as a whole along the vertical axis). **IMPORTANT:** **• The minimum tripping time of the protection is t2. If, according to the calculation, the tripping time is less, it is automatically limited to t2.** **• For all the UL versions, the maximum time allowed is 0.4 s. If a higher value is set, the trip unit signals the error and forces the parameter to 0.4 s.**

With the module Ekip T&P and with the Ekip Connect software, it is possible to activate the function **Thermal Memory**.

I Protection

I protection protects against instantaneous short circuit.

When the activation threshold is exceeded, the protection trips within a fixed non-adjustable time.

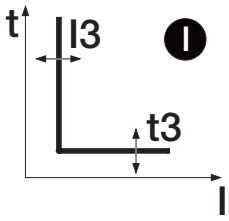

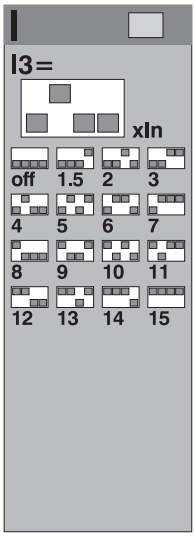

Parameters

The user can set the intervention threshold.

Parameter	Description
Enable	By setting the threshold dip-switches to the Off position, the protection is disabled.
Threshold I3	It defines the current value that activates the protection when exceeded (with reference to the curve, it is the part parallel to the y-axis). **IMPORTANT: The I3 threshold set must be higher than the I2 threshold. An incorrect configuration returns an alarm signal.**

G Protection

G protection protects against a ground fault.

NOTE: *the protection is available for the LSIG version of the trip unit.*

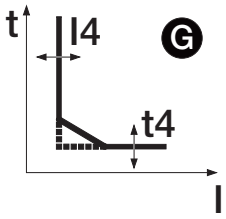

When the activation threshold is exceeded, the protection trips within a fixed or dynamic time (the time decreases as the current reading increases).

Parameters

All the parameters that can be modified by the user affect the response curve, and related tripping times.

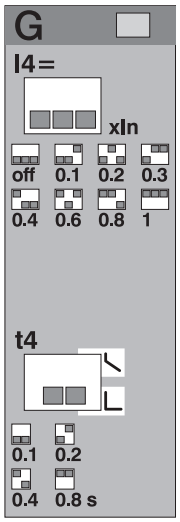

Parameter	Description
Enable	By setting the dip-switches of the threshold in one of the available combinations other than Off, the protection is enabled. If enabled, the protection is inhibited automatically by the trip unit under two conditions: • Disconnection of one or more current sensors. • Current measured on one of the phases higher than a maximum value. **IMPORTANT: the maximum current value that deactivates G protection varies according to the threshold set:** **• 8 In (with I4 ≥ 0.8 In)** **• 6 In (with 0.5 In ≤ I4 < 0.8 In)** **• 4 In (with 0.2 In ≤ I4 < 0.5 In)** **• 2 In (with I4 < 0.2 In)**
Type of curve	It determines the dynamic of the curve and the tripping time, fixed or dynamic according to the selection: **NOTE:** calculation of the tripping time of the inverse time curve is based on a mathematical expression. The details are provided in the table on page37.
Threshold I4	It defines the current value that activates the protection when exceeded (with reference to the curve, it is the part parallel to the y-axis). **IMPORTANT:** **• The delay is interrupted if the current drops below the tripping threshold.** **• For all the UL versions the maximum threshold allowed by the trip unit is 1200 A. If a higher value is set, the trip unit signals the error and forces the parameter to 1200 A.**
Time t4	The selected function determines the contribution of t4: • Fixed time: t4 is the delay time between the exceeding of the I4 threshold and the sending of the opening command. • Dynamic time: t4 contributes in calculating the tripping time (with reference to the curve, t4 affects the entire curve, shifting it as a whole along the y-axis). **IMPORTANT:** **• The minimum tripping time of the protection is t4. If, according to the calculation, the tripping time is less, it is automatically limited to t4.** **• For all the UL versions, the maximum time allowed by the trip unit is 0.4s. If a higher value is set, the trip unit signals the error and forces the parameter to 0.4 s.**

With the Ekip T&P module and with the Ekip Connect software it is possible to adjust the threshold of **Pre-alarm**.

Neutral and frequency

Adjusting of the neutral setting is used to customize the L, S and I protections on the Neutral pole with a control factor different from the other phases.

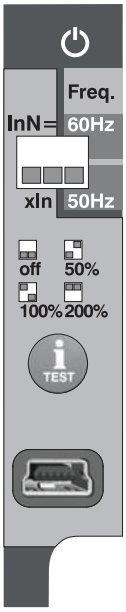

NOTE: *use the adjustment of the neutral setting only with four-pole or three-pole circuit-breakers with external neutral: with three-pole circuit-breakers and neutral protection active, the trip unit signals the absence of the current sensor.*

The adjustment of the frequency is used in order to set the installation frequency (between 50 and 60 Hz).

Neutral parameters

The user can activate the protection and set the percentage for calculation of the protection thresholds.

Parameter	Description
Enable	By setting the threshold dip-switches to the Off position, the protection on the Neutral is disabled.
Threshold InN	It establishes the multiplication factor applied to the trip thresholds of the protections: • 50%: trip threshold of the neutral current lower than other phases. • 100%: same trip thresholds for all poles. • 200%: trip threshold of the neutral current higher than other phases.

Limitations

The adjustment of the Neutral threshold to value of 200 % must be performed considering the following formula: (I1 * InN) ≤ Iu.

I1 indicates the threshold of L protection in amperes (example: In = 1000 A; I1 = 0.45 In = 450 A), InN is the neutral threshold expressed as a multiplication factor (example: 2), Iu indicates the size of the circuit-breaker (example: 1000 A).

WARNING! With 200% threshold and measured neutral current exceeding 16In, the Trip unit resets the protection to 100% by itself

Additional protections

The Ekip T&P module, and the Ekip Connect software, allow you to set some protections not available via dip-switch:

- Thermal Memory
- T Protection
- Prealarm threshold
- Hardware Trip

Thermal Memory

See the manual **1SDH001330R1002** for details.

Summary table of protections

ABB	ANSI [5]	Threshold [1]	Threshold tolerance [3]	Time [1]	Calculation formula t_t [2]	Calculation example t_t [2]	Tolerance t_t [3]
L	49	I1 = 0.4…1 In	activation for If in the range (1.05...1.2) x I1	t1 = 3…144 s	t_t = (9 t1) / (If / I1)^2	t_t = 6.75 s with: I1 = 0.4 In; t1 = 3 s; If = 0.8 In	± 10 % with If ≤ 6 In ± 20 % with If > 6 In
S (t = k)	50 TD	I2 = 0.6...10 In	± 7 % with If ≤ 6 In ± 10 % with If > 6 In	t2 = 0.1…0.8 s	t_t = t2	-	The better of the two values: ± 10 % or ± 40 ms
S (t = k / I^2)	51	I2 = 0.6...10 In	± 7 % with If ≤ 6 In ± 10 % with If > 6 In	t2 = 0.1…0.8 s	t_t = (100 t2) / (If)^2	t_t = 5 s con: I2 = 1 In; t2 = 0.8 s; If = 4 In	± 15 % with If ≤ 6 In ± 20 % with If > 6 In
I	50	I3 = 1.5...15 In	± 10 %	Not adjustable	t_t ≤ 30 ms	-	-
G (t = k)	50N TD	I4 [4] = 0.1...1 In	± 7 %	t4 = 0.1…0.8 s	t_t = t4	-	The better of the two values: ± 10 % or ± 40 ms
G (t = k / I^2)	51N	I4 [4] = 0.1...1 In	± 7 %	t4 = 0.1…0.8 s	t_t = 2 / (If / I4)^2	t_t = 0.32 s with: I4 = 0.8 In; t4 = 0.2 s; If = 2 In	± 15 %
Iinst	-	Defined by ABB	-	Instantaneous	-	-	-

[1] See the serigraph for the available combinations.
[2] t_t calculation is valid for If values that have exceeded the trip threshold of the protection. Use fault current and threshold values expressed in In to calculate t_t, as shown in the example.
[3] Tolerances valid with trip unit energized in service conditions or with the auxiliary; tripping time ≥ 100 ms, temperature and currents within operating limits. If these conditions are not guaranteed, the tolerances in the table shown below apply.
[4] In the presence of auxiliary power supply, you can select all the thresholds. In self-supply mode the minimum threshold is limited to: 0.3 In (with In = 100 A), 0.25 In (with In = 400 A) or 0.2 In (for all other sizes).
[5] ANSI / IEEE C37-2 encoding.

Key

- (t=k) - Fixed time curve
- *(t=k/I²)* - Dynamic time curve
- t_t - Tripping time
- *If* - Primary fault current

Tolerances in particular cases

If the conditions defined in point [3] of the above table are not guaranteed, the following tolerances apply:

Protection	Tolerance threshold	Tolerance t_t
L	Activation for If in the range (1.05...1.2) x I1	± 20 %
S	± 10 %	± 20 %
I	± 15 %	≤ 60 ms
G	± 15 %	± 20 %

4 - List of alarms and signals

LED view

Ekip Dip continuously monitors its own operating condition and that of all the devices to which it is connected. All the signals are available with the front LEDs. The protection LEDs provide information by means of different lighting and flashing combinations, while the power-on LED indicates the power-on state of the release.

NOTE: *the number of LEDs depends on the version of Ekip Dip (LI, LSI, LSIG).*

Summary table of LED signals

The following table summarises the signals available with the protection LEDs and the operations to be carried out in response to alarms or fault conditions signalled.

Type of Information	**Slow flashing (0.5Hz)**			**Fast flashing (2 Hz)**				**On and fixed**			**2 flashes every 2 s**		**3 flashes every 3 s**	**4 flashes every 4 s**	**HELP**
Colour and LED	All R	G	All R+G	All R	R (single)	G	All R+G	All R	R (single)	G	All R	G	G	G	
Internal configuration error [5].			x				x	x							A
Trip coil disconnected or trip command failed				x											B
Current sensors disconnected	x														B
Rating Plug error											X				B+E
Protection delay					x										C
Temperature alarm [1]					x										C
Pre-alarm L										x					C
Trip [2]									x						C
Hardware Trip [3]									x	x					B
Installation error						x									E
Parameter error												x			D
Circuit-breaker state not defined or in error		x													B
Error on Local Bus														x	F
Maintenance alarm													x		F
Software incompatibility								x		x					G
Low battery (during self-test) [4]						x									H

[1] The temperature alarm is signalled by lighting of the protection L and I red LEDs.
[2] The last trip can also be displayed with trip unit off, by pressing the iTest key.
[3] The Hardware Trip is signalled by lighting of the pre-alarm L yellow LED and the protection I red led.
[4] Five flashes when self-test is started up
[5] Error present with one of the three flashing options displayed alongside.

Key to LED colours

The above table lists the colors of the LEDs, to be interpreted as follows:

- R = red LED (alarm LED L, S, I, G).
- G = yellow LED (pre-alarm LED L).

NOTE: *for further details refer to the table listing the components of the interface, available on page* **30.**

HELP

Some LED signals indicate connection errors or operational errors that require corrective or maintenance operations. The following are the suggestions for checking with reference to the preceding LED table:

HELP note	Operation
A	Contact ABB and give details about the state of the LEDs on the unit.
B	Check the connections between trip unit and accessories (Rating Plug, trip coil, sensors, etc).
C	Normal operation/signalling provided by the trip unit.
D	Error in setting of the dip-switches. Check and correct the following conditions: • I1 ≥ I2 or I2 ≥ I3. • Iu < (2 * In * I1) in the case where InN = 200 %. • I4 < 0.3 In (con In = 100 A), 0.25 In (con In = 400 A) or 0.2 In (for all other sizes), in the absence of auxiliary power supply. • t2 > 0.4s (in the case of UL circuit-breaker) • t4 > 0.4s (in the case of UL circuit-breaker) • I4 > 1200 A (in case of UL circuit-breaker)
E	Install by pressing and holding the itest pushbutton for at least 5s.
F	Connect via Ekip Connect in order to set the Local Bus or to confirm maintenance.
G	Replace the battery.

5 - Default parameters

Ekip Dip default parameters

The Ekip Dip trip units are supplied with the following default parameters, some adjustable with the front DIPs (protections, Frequency, Neutral), other via front bus.

Protection/Parameter	Value
L	1 In; 144 s
S (1)	Off; 0.1 s
I	4 In
G (1)	Off; 0.1 s
Frequency	50 Hz (IEC) / 60 Hz (UL)
Neutral	Off (for three-pole circuit breakers). 50 % (for four-pole circuit-breaker)
Hardware Trip	Disabled
Local Bus	Off
LED Alive	Disabled (Power-on LED fixed)
Maintenance	Off

(1) S Protection available with LSI and LSIG versions of the trip unit. G Protection available with LSIG version.

Accessories

1 - Overview

Electrical and mechanical accessories

Electrical and mechanical accessories for E1.2:

Type of accessory	Accessory	Circuit-breakers	Switch-disconnec-tors
Electrical signalling	AUX 4Q	S	R
	AUX 15Q	R	R
	Ekip AUP (1)	R	R
	Ekip RTC	R	R
	S51	S	-
	S33 M/2	R	R
Electrical control	YO (4) - YC	R	R
	YO2 (4)	R	R
	YU (2)(4)	R	R
	M	R	R
	YR	R	-
Security mechanical	KLC - PLC	R	R
	KLP - PLP (1)	R	R
	SL (1)	S	S
	DLC	R	R
	Anti-insertion lock	S	S
	MOC	R	R
	FAIL SAFE (3)	R	R
Protection mechanical	PBC	R	R
	IP54	R	R
	HTC-LTC	R	R
	PB	R	R
Interlocks	MI	R	R

S: Standard. R: on request.
(1) For withdrawable version only.
(2) Incompatible with FAIL SAFE. Can be ordered for UL on request
(3) Incompatible with YU; standard for UL version.
(4) A maximum of two accessories are available for YO and YU.

Putting into service and maintenance

1 - Putting into service

Introduction

The general check is necessary:

- when the circuit-breaker is put into service for the first time
- after prolonged inactivity of the circuit-breaker

HAZARD! RISK OF ELECTRIC SHOCK! Test the circuit-breaker with all switchgear apparatus de-energized.

IMPORTANT: The verifications involve procedures which must only be performed by persons skilled in the electrical field (IEV 195-04-01): person with sufficient training and experience to enable him or her to perceive risks and avoid the dangers potentially created by electricity).

Terminal wiring

Indication of cable size for wiring terminals:

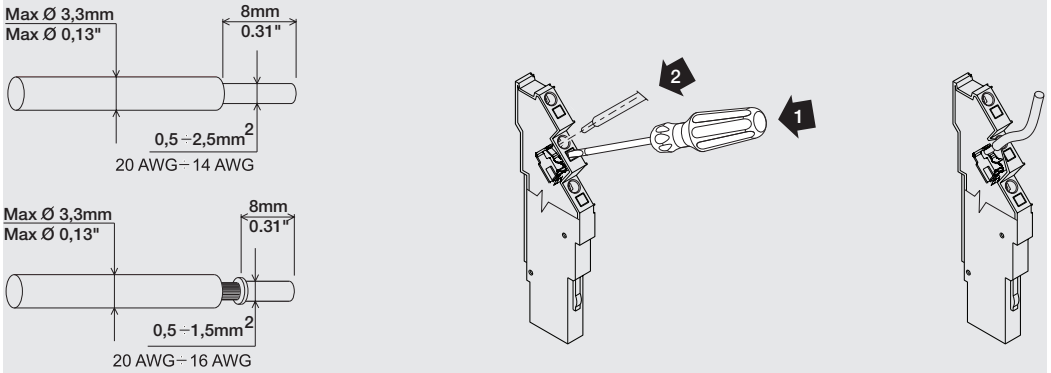

Figure 69

General checks

Before putting it into service for the first time or after a prolonged period of inactivity, some checks must be carried out on the circuit-beaker and the environment in which it is installed:

Points to be checked	Checks
Switchgear	1. Sufficient change of air to avoid overtemperatures
	2. Clean location, free of all installation refuse (e.g.: cables, tools, metal splinters)
	3. Circuit-breaker mounted correctly (tightening torques, clearances respected)
	4. The installation environmental conditions must be consistent with the “Environmental conditions” specifications on page20
Connections	1. Power connections tightened to the terminals of the circuit-breaker
	2. Cables and busbars with adequate cross-section
	3. Correct ground connections
	4. Maximum distances of separators respected
Operations	Perform some opening and closing operations (See chapter "Description of the product - circuit-breaker opening/closing operations on page15). The spring loading lever must move with regularly
	⚠ **WARNING! in the presence of an undervoltage coil the circuit-breaker can be closed only after the trip unit is energized**
Trip unit alarm	Connect the protection device Ekip TT to the trip unit and verify that there are no alarms present
State of the circuit-breaker with Ekip Dip	With Ekip Dip, the circuit-breaker state must not be in error (see table on page38). Perform a circuit-breaker closing/opening operation and make sure that there are no alarms (see table on page38)
State of the circuit-breaker with Ekip Touch	With Ekip Touch, the circuit-breaker state must be read correctly (see table on page38). Perform a circuit-breaker closing/opening operation and make sure that change of state is read correctly
Trip Test	With circuit-breaker closed and in conditions of rest (without circulating currents), carry out a Trip test, and verify the opening of the circuit-breaker
Ekip Dip parameters	Check and modify the protection dip switches, presence of external neutral and frequency to suit your installation requirements
Ekip Touch parameters	Connect the Ekip TT device. Check and make the necessary changes to: protection parameters, circuit-breaker configuration, frequency, PIN, date and language

NOTE: *for security reasons, ABB strongly advises you to change the PIN right from the first access and to keep it with care.*

Wizard

When powered, the Ekip Touch shows the Wizard window, a user-friendly procedure for immediate adjustment of certain parameters: language, date, time, voltage of the installation (if Measurement enabler is present) and PIN.

After the procedure has terminated, the window will no longer appear unless it is reset by Ekip Connect (Reset Wizard command): in this case, it will appear the first time the apparatus is powered after the command has been sent.

Check accessories

The following procedures for checking the accessories are to be performed before they are put into service:

Accessories (*) to be checked	**Procedure**
Gearmotor	1. Power the gearmotor to charge the springs at the relevant rated voltage.
	Result: The springs are charged correctly. The signals are normal. When the springs are charged the gearmotor stops.
	2. Perform some closing and opening operations.
	Result: The gearmotor recharges the springs after every closing operation.
	NOTE: *If present, power the undervoltage coil in advance.*
Undervoltage coil	1. Power the undervoltage coil at the relevant rated voltage and perform the closing operation on the circuit-breaker.
	Result: The circuit-breaker closes correctly; the signals are normal.
	2. Turn off the voltage supply to the trip unit. The circuit-breaker opens.
	3. Power the undervoltage coil at the relevant rated voltage and perform the closing operation on the circuit-breaker.
	Result: The circuit-breaker closes; the signal switches over.
	WARNING! If the undervoltage coil has been tripped by a power failure, the circuit-breaker can be closed only after the coil has been energized electrically. Make sure that the coil has effectively been tripped due to a power failure. Otherwise, examine the circuit-breaker and the associated equipment to make sure that they are in a good condition.
Opening coil	1. Close the circuit-breaker.
	2. Power the opening coil at the relevant rated voltage.
	Result: The circuit-breaker opens correctly; the signals are normal.
Closing coil	1. Open the circuit-breaker.
	2. Charge the springs manually or electrically.
	3. Power the closing coil at its rated voltage.
	Result: The circuit-breaker closes correctly; the signals are normal.
Opening coil with Ekip Com Actuator	1. Power the protection trip unit with the Vaux auxiliary power supply.
	2. Power the Ekip Com Actuator contacts.
	3. Close the circuit-breaker
	4. Select **"open CB"** from the Ekip Touch menu
	Result: The circuit-breaker opens correctly; the signals are normal.
	NOTE: *The test can be performed if the trip unit and the coils are energized.*

(*) if present.
(**) withdrawable versions only.

Continued on the next page

Accessories (*) to be checked	Procedure
Closing coil with Ekip Com Actuator	1. Power the protection trip unit with the Vaux auxiliary power supply.
	2. Power the Ekip Com Actuator contacts.
	3. Charge the springs.
	4. Select **"close CB"** from the Ekip Touch menu
	Result: The circuit-breaker closes correctly; the signals are normal.
	NOTE: *The test can be performed if the protection trip unit and the coils are energized.*
Lock for circuit-breaker in open position (key or padlock)	1. Open the circuit-breaker
	2. Keep the opening pushbutton pressed
	3. Turn the key and remove it
	4. Attempt the circuit-breaker closing operation.
	Result: Both manual and electrical closing is prevented.
Auxiliary open/ closed contacts of the circuit-breaker	1. Connect the auxiliary contacts to appropriate signalling circuits or to the multimeter.
	2. perform some closing and opening operations on the circuit-breaker.
	Result: signalling occurs normally.
Circuit-breaker connected, isolated for test, disconnected auxiliary contacts	1. Connect the auxiliary contacts to appropriate signalling circuits.
	2. bring the circuit-breaker to the connected, isolated for test and disconnected position.
	Result: the signals due to the relative operations are normal.
Locking devices for connected/ test/disconnected positions (**)	1. Perform operating tests.
	Result: the interlocks function correctly.
Interlocks between circuit breakers assembled side by side and stacked	1. Perform operating tests.
	Result: the interlocks function correctly.
Racking-in/out device (**)	1. Perform a few racking-in and racking-out operations.
	Result: in the rack-in operation the circuit-breaker is connected correctly. There is no particular resistance during the first turns of the handle.
Auxiliary accessories and auxiliary voltage	Verify the proper installation. The supply voltage of the auxiliary accessories must be between 85% and 110% of the rated voltage for the auxiliary accessories.
External modules	1. For all modules with terminal box: check connection to *Ekip Supply* in mechanical seat of terminal box For *Ekip Signalling 10K* and *Ekip Multimeter*: check connection of the bus of module (W3-W4) to the respective sockets of *Ekip supply* or terminal box
	2. Power up the Trip unit (and external modules if there is a separate supply) and make sure they are on
	3. Check on menu or via Ekip Connect that the local bus on the Trip unit is enabled
	4. Check that the Power LED on each module is on in the same way as the Power LED of Ekip Touch (steady or synchronous flash)
	5. Check on menu or via Ekip Connect to make sure that all installed modules are present and that there are no alarms
External neutral, single-pole sensor (SGR), residual current sensor (Rc)	1. Make sure that the sensor is connected to the terminal box
	2. Power up the Trip unit and make sure it is on
	3. For *External neutral*: check in the *Settings - Circuit-breaker* menu that *Configuration*= 3P + N; otherwise change the parameter For single-pole and residual current sensors: set presence and size in the *Settings - Circuit-breaker - Earth protection* menu; protection parameters in the *Protections* or *Advanced* menus
	4. Make sure there are no alarms

(*) if present.
(**) withdrawable versions only.

Accessories (*) to be checked	Procedure
Zone selectivity	1. Check selectivity connections (between Ekip Touch and the other units) as shown in circuit diagrams
	2. Provide Ekip Touch with auxiliary power and make sure that CB status is: Open
	3. Check that the protection of the selectivity concerned has been enabled (example: S protection)
	4. Select the *Test - Zone Selectivity* menu and the submenu of the protection concerned; repeat points 5, 6, 7 and 8 for each protection activated **NOTE**: *for selectivity D, consider submenu S for the Forward connections and G for the Backward connections*
	Check **Output**: 5. Select the *Force Output* command and check, on the unit connected to the Ekip Touch output, that the state of its *Input* = **ON** 6. Select *Release Output* and check on the unit that *Input* = **OFF**
	Check **Input**: 7. Select the *Force Output* command in the unit connected to the Ekip Touch input; check on Trip unit: *Input* = **ON** 8. Select *Release Output* and check on Trip unit: *Input* = **OFF**

Final check list

Perform the operations described below after having completed the general inspection procedures and checked the accessories. Print this sheet and use it to make an inspection report in the "Checks" column.

Operation		Description	Check
1	Circuit-breaker OFF	Open the circuit-breaker	
2	Circuit-breaker connected	Switch the circuit-breaker in withdrawable version to the connected position and reposition the crank in its seat	
3	Trip unit Parameters	Adjust the protection trip unit in accordance with the design specifications of the installation (drawn up by design engineer of the installation). If necessary, power the protection trip unit with an Ekip TT unit	
4	Removal of the Ekip TT	If present, remove the Ekip TT unit	
5	Connecting the voltage	Connect the auxiliary voltage	
6	Closing the switchgear	Close the switchgear door	
7	Charging the springs	Charge the closing springs	
8	Undervoltage coil	Make sure that undervoltage coil is energized	
9	Opening and closing coils	Make sure that opening and closing coils are NOT energized	
10	Mechanical interlock of the circuit-breaker	If present, make sure that the mechanical interlock of the circuit-breaker is not active	
11	Locking devices	If present, make sure that the locking devices of the circuit-breaker are not active	
12	Status signals	Make sure that the signalling devices on the front of the circuit-breaker indicate: circuit-breaker open - springs discharged O - OPEN and white spring signalling device DISCHARGED SPRING	

2 - Identification of alarms or failures

Introduction

The protection trip unit is able to identify some faults and to signal them through LEDs or display; you need to identify the cause and eliminate it before re-closing the circuit-breaker, both locally and remotely.

⚠ **WARNING! detecting faults must only be managed by persons skilled in electrical matters (IEV 195-04-01): person with sufficient training and experience to enable him or her to perceive risks and to avoid the dangers potentially created by electricity) This is because it may be necessary to perform insulation and dielectric tests on part or all of the installation.**

Some failures involve partial operation of the circuit-breaker. Consult the paragraphs “Faults, causes and remedies” where the possible causes of the main faults are listed.

Further information on the Ekip Touch and on the accessories mentioned in this chapter and which are not covered in this manual are available on the website http://www.abb.com/abblibrary/DownloadCenter/, with the Ekip Touch manual **1SDH001316R0002**.

Faults, causes and remedies

The following is a list of possible fault situations, their possible causes and suggestions for resolving them.

NOTE: *with Ekip Touch, also make use of the suggestions given in document* **1SDH001316R1002.**

Faults	Possible causes	Suggestions
The circuit-breaker doesn't close when the closing pushbutton is pressed	The trip signal of the protection trip unit has not been reset	Press the TU mechanical reset pushbutton or operate the electrical reset remotely.
	The open-position key lock or padlock is activated	Unlock the lock in open position using the relevant key
	The circuit-breaker is in an intermediate position between connected and isolated for test or between isolated for test and disconnected	Complete the rack-in operation
	The undervoltage coil is not energized	Check the power supply circuit and the power supply voltage
	The opening coil is permanently energized	Correct operating condition.
	The trip unit pushbutton is pressed (withdrawable version)	Rotate the crank to complete
The circuit-breaker doesn't close when the closing coil is powered	The trip signal of the protection trip unit has not been reset	Press the TU Reset button
	The power supply voltage of the auxiliary circuits is too low	Measure the voltage: it should not be lower than 70% of the rated voltage of the coil
	The power supply voltage is different from that indicated on the rating plate	Check the voltage on the rating plate
	The cables of the coil are not inserted correctly in the terminals	Make sure there is continuity between cable and terminal and if necessary reconnect the cables of the coil to the terminals
	The connections in the power supply circuit are wrong	Check the connections using the relevant wiring diagram
	The closing coil is damaged	Replace the coil
	The operating mechanism is blocked	Perform the closing operation manually; if the fault persists contact ABB
	The open position key lock is activated	Unlock the lock in open position using the relevant key
	The circuit-breaker is in an intermediate position between connected and test or the trip unit pushbutton is pressed (withdrawable version)	Complete the rack-in operation
	The undervoltage coil is not energized	Make sure that undervoltage coil is energized properly
	The opening coil is permanently energized	Correct operating condition. If necessary, disconnect the power from the opening coil
	The racking out crank handle is inserted (withdrawable version)	Remove the crank
The circuit-breaker doesn't open when the opening pushbutton is pressed	The operating mechanism is blocked	Contact ABB

Continued on the next page

Faults	Possible causes	Suggestions
The circuit-breaker doesn't open when the opening coil is powered	The operating mechanism is blocked	Contact ABB
	The power supply voltage of the auxiliary circuits is too low	Measure the voltage: it should not be lower than 85 % of the rated voltage of the coil
	The power supply voltage is different from that indicated on the rating plate	Use the correct voltage
	The cables of the coil are not inserted correctly in the terminals	Make sure there is continuity between cable and terminal and if necessary reconnect the cables of the coil to the terminals
	The connections of the power supply circuit are wrong	Check the connections using the relevant wiring diagram
	The opening coil is damaged	Replace the coil
The circuit-breaker doesn't open despite the command of the undervoltage coil	The operating mechanism is blocked	Perform the opening operation manually; if the fault persists contact ABB
It is not possible to charge the closing springs by means of the manual charging lever	The operating mechanism is blocked	Contact ABB
It is not possible to charge the closing springs by means of the gearmotor	The cables of the gearmotor are not inserted correctly in the terminals	Make sure there is continuity between cable and terminal and if necessary reconnect the cables of the gearmotor to the terminals
	The connections of the power supply circuit are wrong	Check the connections using the relevant wiring diagram
	The circuit-breaker is in disconnected position	Switch the circuit-breaker to the test or connected position
	The gearmotor protection internal fuse has tripped	Replace the fuse
	The gearmotor is damaged	Replace the gearmotor
It is not possible to press the button in order to insert the racking out crank handle	The circuit-breaker is closed	Press the opening pushbutton in order to allow the insertion of the crank with the circuit-breaker open
It is not possible to insert the moving part in the fixed part	The racking-in/racking-out operation is not performed correctly	See chapters "Circuit breaker racking-in/racking-out operations" on pages17 See the document 1SDH002013A1001
	The moving part is incompatible with the fixed part	Check the compatibility between the moving part and the fixed part
It is not possible to lock the circuit-breaker in the open position	The opening pushbutton is not being pressed	Press the opening pushbutton and activate the lock
	The lock in open position is defective	Contact ABB
It is not possible to perform the trip test	Trip coil is not connected properly	Check Trip coil connection and messages on display
	CB trip signal has not been reset	Press the reset pushbutton
	The busbar current is greater than zero	Correct operating condition.

Continued on the next page

Faults	Possible causes	Suggestions
It is not possible to remove the circuit-breaker from the disconnected position	Fail Safe lock active	Discharge the closing springs of the command
Trip times different than expected	Wrong threshold/time/curve selected	Correct parameters
	Thermal memory enabled	Disable it if it is not necessary
	Incorrect neutral selection	Modify the neutral selection
Rapid trip with I3 = Off	Iinst trip	Correct operating condition with short circuit at high current
High ground-fault current, but no trip occurs	Function G inhibited owing to high current	Correct operating condition (see use cases in the chapter that describes the protection)
Measurements incorrect or absent (current, etc)	Current below the minimum threshold that can be displayed	Correct operating condition.
	Harmonic distortion and/or crest factor off range	Correct operating condition.
Opening data not displayed	No auxiliary power supply and/or battery low	Correct operating condition.

3 - Maintenance

Details related to this chapter are available in the manual **1SDH001330R1002** (Emax 2 engineering manual) available on the website ABB library.

4 - Decommissioning and treatment at end of life

Safety standards

During the early stages of the process of decommissioning and end of life treatment of SACE Emax 2 circuit-breakers, observe the following safety rules:

- the closing springs, even if discharged, must never to be taken apart.
- for handling and lifting of the circuit-breakers refer to the section "Unpacking and handling" on page 10 .

HAZARD! RISK OF ELECTRIC SHOCK! Unplug or disconnect any power supply, to avoid any potential risk of shock during removal of the circuit-breaker from the service.

WARNING! After dismantling the switchgear, the circuit-breaker must be stored in the open position with the closing springs discharged and with the front cover mounted.

Trained personnel

The operations for decommissioning SACE Emax 2 circuit-breakers involve performing procedures that can be performed by Trained Persons in the electrical field (IEV 195-04-02: person adequately advised or supervised by electrically skilled persons to enable him or her to perceive risks and to avoid danger which electricity can create).

End of life treatment for circuit-breaker materials

The materials used in the production of SACE Emax 2 circuit-breakers are recyclable and should be treated separately as shown in the following table:

TYPE	MATERIAL
A	Plastic parts [1]
B	Metal parts
C	Printed circuits
D	Current sensors, cables, motors, electrical windings

[1] *All the components of significant dimensions bear a mark specifying the type of material.*

NOTE: *refer to the national legislation in force at the time of decommissioning of the product, in the case where it specifies end of life treatment procedures different from those indicated.*

Disposal of packing materials

The materials used for the packaging of SACE Emax 2 circuit-breakers are recyclable and should be treated separately as shown in the following table:

TYPE	MATERIAL
A	Plastic parts
B	Cardboard parts
C	Wooden parts

NOTE: *refer to the national legislation in force at the time of decommissioning of the product, in the case where it specifies end of life treatment procedures different from those indicated.*

We reserve the right to make technical changes or modify the contents of this document without prior notice. ABB does not accept any responsibility whatsoever for potential errors or possible lack of information in this document.

We reserve all rights in this document and in the subject matter and illustrations contained therein. Any reproduction, disclosure to third parties or utilization of its contents – in whole or in parts – is forbidden without prior written consent of ABB.

Copyright© 2022 ABB - All rights reserved.

1SDH000999R0002 - ECN000297030