Spanners and sockets

Easy mounting and dismounting without nut damage



Interference fits on tapered shafts

Bearings mounted on tapered seatings achieve their interference fit by being driven up the tapered shaft. Care should be taken to ensure the bearing is not driven up too far, as all the internal clearance may be removed and damage to the bearing is possible.

Incorrect mounting

Bearing driven up too far and all clearance removed; damage possible.

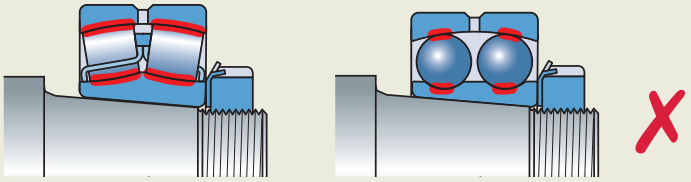

Correct mounting

Bearing driven up the correct distance and the right clearance is achieved.

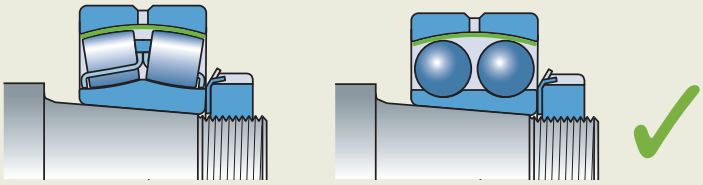

The comprehensive range of SKF spanner and sockets are used to tighten and loosen many types and sizes of bearing lock nuts, for bearings mounted directly on a shaft or on sleeves.



Exact spanner radius reduces the risk of nut damage

SKF Hook Spanners HN series

- Minimises the risk of shaft and nut damage
- Plastic handle is oil, grease and dirt resistant to provide a better grip
- The plastic handle minimises direct metal to skin contact, reducing the risk of corrosion in the handle area
- Spanner designation is laser-engraved allowing for easy identification and selection
- Available as a set: SKF HN 4-16/SET containing 9 spanners for lock nut sizes 4 up to 16

Contents SKF HN 4-16/SET		
HN 4	HN 8-9	HN 14
HN 5-6	HN 10-11	HN 15
HN 7	HN 12-13	HN 16

Selection chart – HN series

Designation	Suitable for the following series of SKF lock nuts						
	KM	N	AN	KMK	KMFE	KMT	DIN 1804 (M)
HN 0	0	0		0			M6×0,75, M8×1
HN 1	1	1		1			
HN 2-3	2, 3	2, 3		2, 3		0	M10×1, M12×1,5
HN 4	4	4		4	4	1, 2	M14×1,5, M16×1,5
HN 5-6	5, 6	5, 6		5, 6	5, 6	3, 4, 5	M22×1,5, M24×1,5, M26×1,5
HN 7	7	7		7	7	6, 7	M28×1,5, M30×1,5, M32×1,5, M35×1,5
HN 8-9	8, 9	8, 9		8, 9	8, 9	8	M38×1,5, M40×1,5, M42×1,5
HN 10-11	10, 11	10, 11		10, 11	10, 11	9, 10	M45×1,5, M48×1,5, M50×1,5
HN 12-13	12, 13	12, 13		12, 13	12, 13	11, 12	M52×1,5, M55×1,5, M58×1,5, M60×1,5
HN 14	14	14		14	14		
HN 15	15		15	15	15	13, 14	M62×1,5, M65×1,5, M68×1,5, M70×1,5
HN 16	16		16	16	16	15	
HN 17	17		17	17	17	16	M72×1,5, M75×1,5, M80×2
HN 18-20	18, 19, 20		18, 19, 20	18, 19, 20	18, 19, 20	17, 18, 19	M85×2, M90×2
HN 21-22	21, 22	22	21, 22		21, 22	20, 22	M95×2, M100×2

Technical data – HN series

Designation	Spanner design DIN 1810	Outer diameter lock nut	
	mm	mm	*in.*
HN 0		16–20	*0.6–0.8*
HN 1	Ø20–Ø22	20–22	*0.8–0.9*
HN 2-3	Ø25–Ø28	25–28	*1.0–1.1*
HN 4	Ø30–Ø32	30–32	*1.2–1.3*
HN 5-6		38–45	*1.5–1.8*
HN 7	Ø52–Ø55	52–55	*2.0–2.2*
HN 8-9		58–65	*2.3–2.6*
HN 10-11	Ø68–Ø75	68–75	*2.7–3.0*

Designation	Spanner design DIN 1810	Outer diameter lock nut	
	mm	mm	*in.*
HN 12-13	Ø80–Ø90	80–90	*3.1–3.5*
HN 14		92	*3.6*
HN 15	Ø95–Ø100	95–100	*3.7–3.9*
HN 16		105	*4.1*
HN 17	Ø110–Ø115	110–115	*4.3–4.5*
HN 18-20	Ø120–Ø130	120–130	*4.7–5.1*
HN 21-22	Ø135–Ø145	135–145	*5.3–5.7*



Four sizes for tightening or loosening up to 24 nut sizes

SKF Adjustable Hook Spanners HNA series

- One hook spanner covers several nut sizes, making it suitable for use with many applications
- Economic solution: 4 hook spanners cover a wide range of nut sizes
- Laser engraved designation, which represents the range of nut sizes covered by each spanner, allows easy selection of the correct spanner
- Versatile: suitable for a wide selection of lock nuts
- Minimises the risk of shaft and nut damage

Selection chart and technical data – HNA series

Designation	Outer diameter lock nut		Suitable for the following series of SKF lock nuts						
	mm	*in.*	KM	KML	N	AN	KMK	KMFE	KMT
HNA 1-4	20–35	*0.8–1.4*	1–4		1–4		0–4	4	0–2
HNA 5-8	35–60	*1.4–2.4*	5–8		4–8		5–8	5–8	3–7
HNA 9-13	60–90	*2.4–3.5*	9–13		9–13		9–13	9–13	8–12
HNA 14-24	90–150	*3.5–6.1*	14–24	24–26		15–24	14–20	14–24	13–24



Easy and quick bearing mounting and dismounting in SNL housings

SKF Hook Spanners HN ../SNL series

- Unique design allows the SKF HN ../SNL series to be used inside SKF SNL, FSNL, SNH and SE bearing housings
- Suitable for tightening and loosening a wide selection of lock nuts, facilitating their use in a wide range of housing and shaft applications
- The large contact area of the spanner around the nut provides excellent grip and force transmission
- Exact fit reduces the risk of shaft, nut and housing damage



Selection chart and technical data

Designation	Outer diameter lock nut		Suitable for SKF housings	Suitable for the following series of SKF lock nuts						
			SNL / FSNL / SNH / SE	KM	KML	N[1]	AN[1]	KMK[1]	KMFE	KMT[1]
	mm	*in.*								
HN 5/SNL	38	*1.50*	505, 506–605	5		5		5	5	5
HN 6/SNL	45	*1.77*	506–605, 507–606	6		6		6	6	6
HN 7/SNL	52	*2.05*	507–606, 508–607	7		7		7	7	7
HN 8/SNL	58	*2.28*	508–607, 510–608	8		8		8	8	8
HN 9/SNL	65	*2.56*	509, 511–609	9		9		9	9	9
HN 10/SNL	70	*2.76*	510–608, 512–610	10		10		10	10	10
HN 11/SNL	75	*2.95*	511–609, 513–611	11		11		11	11	11
HN 12/SNL	80	*3.15*	512–610, 515–612	12		12		12	12	12
HN 13/SNL	85	*3.35*	513–611, 516–613	13		13		13	13	13
HN 15/SNL	98	*3.86*	515–612, 518–615	15			15	15	15	15
HN 16/SNL	105	*4.13*	516–613, 519–616	16			16	16	16	16
HN 17/SNL	110	*4.33*	517, 520–617	17			17	17	17	17
HN 18/SNL	120	*4.72*	518–615	18			18	18	18	18
HN 19/SNL	125	*4.92*	519–616, 522–619	19			19	19	19	19
HN 20/SNL	130	*5.12*	520–617, 524–620	20		22	20, 21	20	20	20
HN 22/SNL	145	*5.71*	522–619	22	24	24	22		22	22
HN 24/SNL	155	*6.10*	524–620	24	26	26	24		24	24
HN 26/SNL	165	*6.50*	526	26	28	28	26		26	26
HN 28/SNL	180	*7.09*	528	28	30	30				
HN 30/SNL	195	*7.68*	530	30	32	34	30			32
HN 32/SNL	210	*8.27*	532	32		36				

[1] Not recommended for use in combination with SNL/SNH housing



Easy mounting and dismounting without nut damage

SKF Axial Lock Nut Sockets TMFS series

- Requires less space around the bearing arrangement than hook spanners
- Inch connections for power tools or torque wrenches
- SKF TMFS fits nuts of series KM, KMK (metric) and KMF
- Special versions are available on request



Selection chart and technical data

Designation	Suitable for the following series of SKF lock nuts			Dimensions						Connection
	KM, KMK	KMFE	DIN 1804 (M)	Outer diameter lock nut		Outer diameter socket		Effective height		
				mm	*in.*	mm	*in.*	mm	*in.*	*in.*
TMFS 0	0 [1]			18	*0.7*	22,0	*0.9*	45	*1.8*	3/8
TMFS 1	1			22	*0.9*	28,0	*1.1*	45	*1.8*	3/8
TMFS 2	2		M10×1	25	*1.0*	33,0	*1.3*	61	*2.4*	1/2
TMFS 3	3		M12×1,5	28	*1.1*	36,0	*1.4*	61	*2.4*	1/2
TMFS 4	4	4	M16×1,5	32	*1.3*	38,0	*1.5*	58	*2.3*	1/2
TMFS 5	5	5		38	*1.5*	46,0	*1.8*	58	*2.3*	1/2
TMFS 6	6	6	M26×1,5	45	*1.8*	53,0	*2.1*	58	*2.3*	1/2
TMFS 7	7	7		52	*2.0*	60,0	*2.4*	58	*2.3*	1/2
TMFS 8	8	8	M38×1,5	58	*2.3*	68,0	*2.7*	58	*2.3*	1/2
TMFS 9	9	9		65	*2.6*	73,5	*2.9*	63	*2.5*	3/4
TMFS 10	10	10		70	*2.8*	78,5	*3.1*	63	*2.5*	3/4
TMFS 11	11	11		75	*3.0*	83,5	*3.3*	63	*2.5*	3/4
TMFS 12	12	12		80	*3.1*	88,5	*3.5*	63	*2.5*	3/4
TMFS 13	13	13		85	*3.3*	94,0	*3.7*	63	*2.5*	3/4
TMFS 14	14	14		92	*3.6*	103,0	*4.1*	80	*3.2*	*1*
TMFS 15	15	15		98	*3.9*	109,0	*4.3*	80	*3.2*	*1*
TMFS 16	16	16		105	*4.1*	116,0	*4.6*	80	*3.2*	*1*
TMFS 17	17	17		110	*4.3*	121,0	*4.8*	80	*3.2*	*1*
TMFS 18	18	18		120	*4.7*	131,0	*5.2*	80	*3.2*	*1*
TMFS 19	19	19		125	*4.9*	137,0	*5.5*	80	*3.2*	*1*
TMFS 20	20	20		130	*5.1*	143,0	*5.7*	80	*3.2*	*1*

[1] KM 0 only



High impact forces without nut damage

SKF Impact Spanners TMFN series

- Designed for safely tightening and loosening a wide selection of larger lock nuts
- Not intended to be used to drive bearings up a tapered seating
- Helps avoid shaft and nut damage
- Safe and user friendly
- Impact applied effectively to the nut
- Special wide impact face
- To be used in combination with a hammer

Suitable for the following series of SKF lock nuts

Designation	KMT ..	KM ..	KML ..	KMFE ..	HM .. (HM .. E)			HM .. T	AN ..	N ..		DIN 1804 (M)
TMFN 23-30	26–30	23–31	26–32	24–28					AN22–AN28	N022–N032		M105x2–M130x3
TMFN 30-40	32–40	32–40	34–40	30–38					AN30–AN38	N034–N040		M140x3–M180x3
TMFN 40-52				40	3044–3052			42–48	AN40	N044–N052	N44	M190x3, M200x3
TMFN 52-64					3056–3064	3160		50, 52, 56		N056–N064		
TMFN 64-80					3068–3084	3164–3176				N068–N084		
TMFN 80-500					3088–3096	3180–3196	30/500			N088–N096	N500	
TMFN 500-600					30/530–30/630	31/500–31/560				N530–N630		
TMFN 600-750					30/670–30/800	31/600–31/750				N670–N800		

Suitable for the following series of SKF adapter sleeves

Designation	H 23..	H 30..	H 31..	H32	H39
TMFN 23-30	H2324–H2332L	H3024E–H3032	H3124–H3130L		H3926–H3932
TMFN 30-40	H2332–H2340	H3030E, H3034–H3040	H3132–H3140L		H3934–H3940
TMFN 40-52	OH2344H, OH2348H	OH3044H–OH3052H	H3144H(HTL)–H3152HTL		H3944H–H3952H
TMFN 52-64	OH2352H, OH2356H	OH3056H–OH3064H	OH3152H–OH3160H	OH3260H	OH3956H–OH3964H
TMFN 64-80		OH3068 H–OH3084H	OH3164H–OH3176H(E)	OH3264H–OH3276 H	OH3968H–OH3984H(E)
TMFN 80-500		OH30/500H, OH3080H–OH3096H	OH3180H(E)–OH3196H(E)	OH3280H–OH3296 H	OH39/500H(E), OH3988H–OH3996H(E)
TMFN 500-600		OH30/530H–OH30/630H	OH31/530H–OH31/560H(E)	OH32/500H–OH32/560H	OH39/530H(E)–OH39/630H(E)
TMFN 600-750		OH30/670H–OH30/800H(E)	OH31/600H–OH31/750H(E)	OH32/600H–OH32/750H	OH39/670H(E)–OH39/800H(E)

Technical data

Designation	d		f		h	
	mm	*in.*	mm	*in.*	mm	*in.*
TMFN 23-30	148	*5.83*	11,5	*0.45*	4,4	*0.17*
TMFN 30-40	193	*7.60*	13,5	*0.53*	5,3	*0.21*
TMFN 40-52	248	*9.76*	16	*0.63*	6,5	*0.26*
TMFN 52-64	316	*12.44*	19	*0.75*	8,5	*0.33*
TMFN 64-80	396	*15.59*	23	*0.91*	11	*0.43*
TMFN 80-500	516	*20.31*	28	*1.10*	13	*0.51*
TMFN 500-600	626	*24.65*	36	*1.42*	16	*0.63*
TMFN 600-750	746	*29.37*	40	*1.57*	19	*0.75*

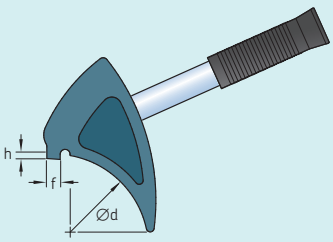



For achieving the correct radial clearance

SKF Bearing Lock Nut Spanner TMHN 7 series

The SKF TMHN 7 set of lock nut spanners is especially designed for mounting self-aligning ball bearings as well as small spherical roller and CARB toroidal roller bearings on tapered seatings. Using the SKF TMHN 7, minimises the risk of over-tightening of the lock nut, which can remove the bearing's radial clearance resulting in bearing damage.

- 7 different-sized spanners to fit nut sizes 5 to 11
- Each spanner is equipped with a protractor and is clearly marked with the correct tightening angle for mounting SKF Self aligning ball bearings
- 4 grip points on each spanner provide a better and safer grip on the nut
- Reduced risk of damaging bearing by over-tightening
- Suitable for use with lock nuts of the KM series either on shaft or in SNL housings

TMHN 7 is suitable for use with:

Bearing designation
1205 EK–1211 EK
1306 EK–1311 EK
2205 EK–2211 EK
2306 K
2307 EK–2309 EK
2310 K–2311 K

Technical data

Designation	TMHN 7
Carrying case dimensions	345 × 255 × 85 mm *(13.6 × 10.0 × 3.3 in.)*
Weight	2,2 kg *(4.7 lb)*

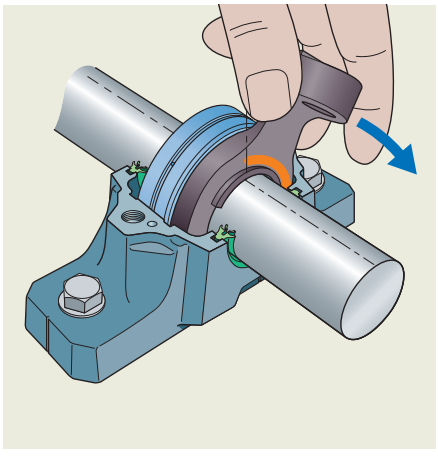

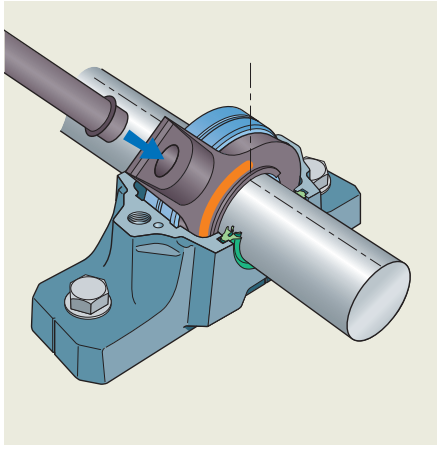

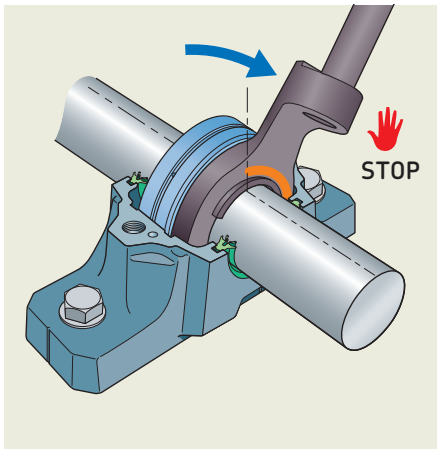

skf.com | mapro.skf.com | skf.com/lubrication

® SKF is a registered trademark of the SKF Group.

© SKF Group 2017
The contents of this publication are the copyright of the publisher and may not be reproduced (even extracts) unless prior written permission is granted. Every care has been taken to ensure the accuracy of the information contained in this publication but no liability can be accepted for any loss or damage whether direct, indirect or consequential arising out of the use of the information contained herein.

PUB MP/P8 13074/2 EN · August 2017