Monitoring Technique

VARIMETER
Speed Monitor
MK 9055N/5_ _, MH 9055/5_ _

0277985



Your Advantage
- Protection of persons, machines and products
- Easy setting
- Universal input, for configuration of different sensors (PNP, NPN, 2-wire, contact, voltage)
- With fast reaction at low speed

Features:
- According to IEC/EN 60 255-1
- Monitoring of 2 frequency levels (e.g. underspeed / standstill and overspeed)
- Separate relay outputs for under- and overfrequency (1 or 2 c/o contacts each)
- As alternative window operating mode (monitoring of a speed range)
- Response value for over- and underspeed / frequency separately adjustable in 10 ranges 1 ... 120.000 IPM or 0,15 ... 20.000 Hz
- Most fast reaction time also at low speed by time period measurement of the input frequency
- As option with input for NAMUR-sensors with sensor and wire protection against interruption and short circuit
- Programmable via termminals:
  - Start up time delay 0 ... 50 s or controllable
  - Alarm delay time of 0 or 0.5 s
  - With manual reset or auto reset
- LED-indication for auxiliary voltage, measuring input and output relay; additional LED for indication of wire- / sensor failure at NAMUR-input
- Auxiliary voltages AC 230 V and DC 24 V in one unit
- MH 9055 with wide input range for auxiliary voltage AC/DC 24 ... 60 V or AC/DC 110 ... 230 V (only 2 x 1 C/O)
- As option with analogue output, proportionally to speed
- 2 possible contacts
  MK 9055N/5_ _ 2 x 1 changeover contacs
  MH 9055/5_ _: 2 x 2 hangeover contacs or wide range aux. voltage
- 2 possible compact designs
  MK 9055N/5_ _: Width 22,5 mm
  MH 9055/5_ _: Width 45 mm

Circuit Diagrams

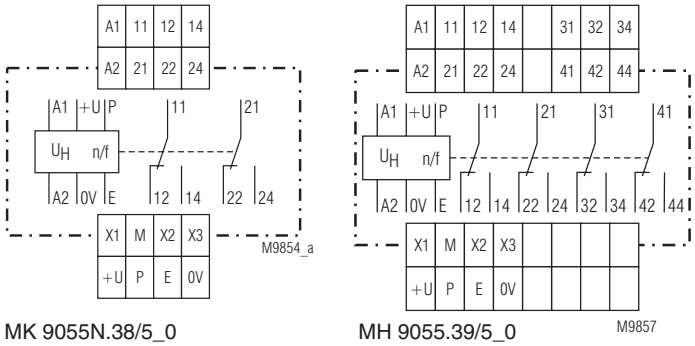

MK 9055N.38/5_0

MH 9055.39/5_0

Connection Terminal

Terminal designation	Signalbeschreibung
A1+, A1	+ / L
A2	- / N
IN+, IN-, P, E	Measuring input
X1, X2, X3	Programming terminals
M	Ref. point programming terminals
UA	Analogue output voltage
IA	Analogue output current
+U / 0V	Sensor supply and alternative external auxiliary voltage DC 24 V
11, 12, 14; 21, 22, 24; 31, 32, 34; 41, 42, 44	Speed error-Indicator relay (4 changeover contacts)

Approvals and Markings

CE

Setting

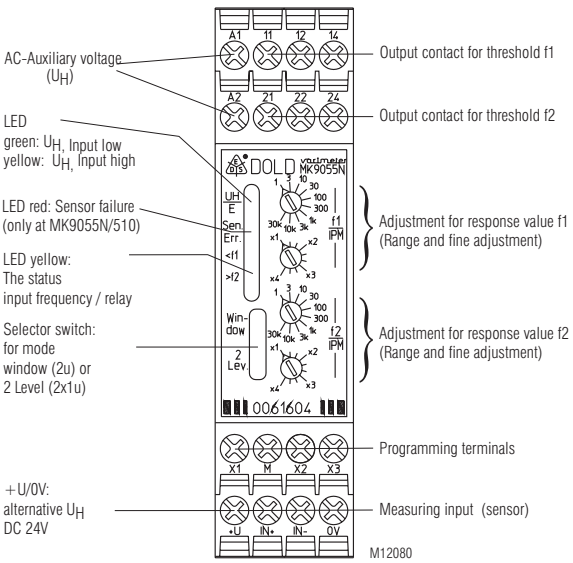

Applications
- Speed monitoring on rotating machine parts
- Monitoring of cyclic movements
- General monitoring of pulse sequences (transportation, conveyors, production systems),
- Monitoring of pulse frequency (e.g. flow sensors, anemometers)

All technical data in this list relate to the state at the moment of edition. We reserve the right for technical improvements and changes at any time

Function Diagram

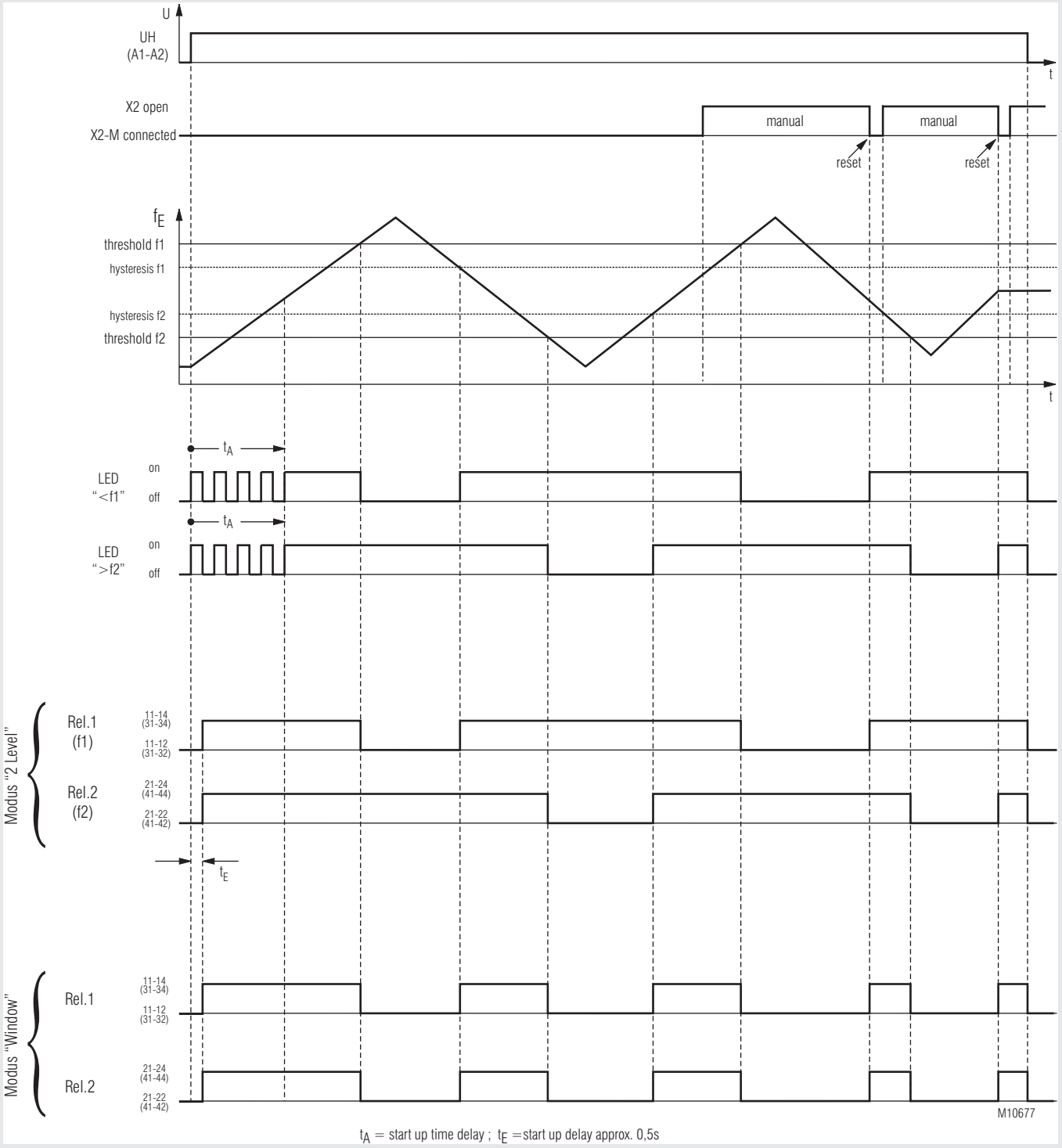

t_A = start up time delay ; t_E =start up delay approx. 0,5s

Function

The auxiliary supply is connected to terminals A1-A2. An operation with alternatively DC 24 V is possible via terminals +U / 0V.
Different sensors can be connected to the measuring input that detects the speed pulses.
The input frequency is compared to the setting value over- and underfrequency (response value f1 or f2 = fine tunig x range).
As the device measures the periods duration the fastest frequency measurement is possible.
If the input frequency is under the threshold f1 (2 upper setting elements on the front) minus hysteresis and over the the threshold f2 (2 lower setting elements on the front) plus hysteresis, both output relays are energized and the Yellow LEDs "<f1" and ">f2" are on.
If the input frequency rises over the threshold f1, in 2-level mode relay 1 de-energizes (contact 11-12 closes); in window mode also relay 2 de-energizes (contact 21-22 closes) the yellow LED "<f1" goes off (alarm state).
Only when the input frequency returns under threshold f1 minus hysteresis the relay (in window mode both relays) energize again and the the yellow LED"<f1" lights up.
If the input frequency goes under the threshold f2, in 2-level mode relay 2 de-energizes (contact 21-22 closes); in window mode also relay 1 de-energizes (contact 11-12 closes) the yellow LED "<f2" goes off (alarm state).
Only when the input frequency returns over threshold f2 plus hysteresis the relay (in window mode both relays) energize again and the the yellow LED"<f2" lights up.
If manual reset is activated (terminal X2 unconnected) the relevant output relays remain in alarm state when the frequency is back in good state and the LED stays off. Reset of the alarm state is the possible by bridging X2-M or by disconnection of the auxiliary supply.
If a start up delay is adjusted, after connection of the auxiliary supply the start up delay elapses. During this time the frequency is not monitored. the yellow LEDs "<f1" and >f2" flash and the output relays are in good state (energized).
During start up delay an alarm signal can be avoided e.g. during the starting period of a motor.

With the sliding switch on the front either 2-level mode or window mode is selected.

"2 level mode":	2 x 1 c/o contact; the output relays switch separately at the corresponding thresholds for f1 and f2.
"Window mode":	2 c/o contacts; the output relays switch simultaneously on threshold f1 and f2 (where f1 > f2), i.e. the relays both de-energise either going over f1 or going under f2.

The variant /510 (NAMUR sensor input) includes broken wire and short circuit monitoring of the sensor and connection wire. A red LED indicates this failure and the output relays switch off.

Indicators

Upper LED "UH/E":
- green: Auxiliary supply is present, measuring input is Low
- yellow: Auxiliary supply is present, measuring input is High
- lintermittent red/green flashing if U_H and impuls sequence present

Red LED "Sen.Err":
(only at NAMUR input) - on, when broken wire or interruption at sensor ciruit detected

Lower LED "<f1" (yellow):- on, when inout frequency lower than f1 (relay 1 energized in 2 level mode)
Lower LED ">f2" (yellow):- on, when input frequency higher than f2 (relay 2 energized in 2 level mode)

LEDs "<f1" and ">f2" flash during start up delay

Notes

Adjustment of threshold f1 and f2 / energized on trip for output relays
Normally the frequency threshold f1 is used for overfrequency and the frequency threshold f2 for underfrequency. The hysteresis works accordingly. Both output relays when adjusted as above work in de-energized on trip mode. in 2 level mode the monitoring and the control of the output relays on both frequency settings f1 and f2 work completely independent. so that f1 can be set higher then f2 when manual reset is not selected. Therefore if F2 is used for overfrequency monitoring the output relay will operate in energized on trip mode as relay 2 (21-22-24) always energises when threshold f2 plus hysteresis is exceeded. Equally the threshold f1 minus hysteresis is used for underfrequency monitoring also now in energized on trip mode for relay 1 (11-12-14). In windows mode with manual reset the frequency threshold f1 must be always adjusted higher than f2 otherwise the output relays will not energize.

Universal measuring input
The universal input of the speed monitor (terminals +U, P, E, 0V) can handle a large variety of sensors (inductive or capacitve proximity sensors, ultra sonic, halleffect, optical sensors, light barriers, reed contacts etc.). The input is suitable for all sensors according to IEC / EN 60947-5-2 (VDE 0660 part 208).
Depending on the sensor that is used (3-wire PNP or NPN, 2-wire, contact) the connection to the input terminals could be different (see Connection Examples).
As the speed monitor is suitable for a very high maximum frequency, RC-elements need to be installed to suppress bouncing of contact sensors (see Connection Examples). It is possible to use standard RC-elements suitable for contact protection or RF interference protection.

NAMUR input
The Variant M_9055N/510 is optimzed for the connection of NAMUR sensors according to IEC / EN 60947-5-6 (VDE 0660 Teil 212; former EN 50227 / DIN 19234). These 2-wire-sensors are connedted to terminals IN+ / IN- (see application example).
Namur sensors have a defined current in ON as well as in OFF state. This allows to detect short circuits and broken wire on sensor and connection wires with this variant. Together with the upper green/yellow LED the type of failure is indicated:
Red LED "Sen..Err" ON and upper LED "UH/E" lights up green:
Broken wire at input circuit
Red LED "Sen..Err" ON and upper LED "UH/E" lights up yellow:
Short circuit at input circuit

Instead of a NAMUR sensor also a contact sensor with correspondent resistor circuit can be used (see Connection Examples).The suggested resistors are necessary to avoid broken wire or short circuit detection alarm. If the resistors are connected directly on the sensor side, the wiring still is monitored. Because of contact bouncing of mechanical contacts a capacitor has to be connected on the measuring input terminals.

Sensor supply, 24V DC auxiliary supply as alternative
The input circuit (+U, P, E, 0V) is galvanic separated to the auxiliary supply A1, A2 (eg. AC 230V). By connecting AC 230V auxiliary voltage on terminals A1-A2 the unit provides a voltage of approx. 24 V max 20mA to supply external sensors. If the auxiliary supply is DC 24V or sensors with higher power consumption are used, the DC 24V auxiliary supply is connected to terminals +U / 0V. The sensors are also supplied from this source. (In this case there is no galvanic separation between auxiliary supply and measuring input).

Monitoring indicator of sensor input
The upper 2-coloure LED shows the connected supply voltage and the electrical state of the measuring input:
Green: input E ist on LOW level
Yellow: input E ion HIGH level
Depending on the type of sensor (PNP, NPN, 2-wire, NO or NC contact) the actual state (active or inactive) is indicated.
Green / yellow: input pulses from sensor present

Several speed monitors on one sensor
Parallel operation of several speed monitors on one sensor is possible the universal input e.g. to monitor several speed levels. The corresponding terminals are all connected in parallel.

Programming terminals (M-X1-X2-X3):

Attention! The terminals M-X1-X2-X3 have no galvanic separation to the measuring circuit (+U / P / E / 0V) e.g. auxiliary voltage DC 24 V

Notes

M: Common connection (Ground) of the programming terminals (identically with 0V

X1: Start up delay with range 0...50 s by bridging X1 with M using a resistor or potentiometer (see Technical Data). If no start up delay is required X1-M has to be bridged

X2: Manual reset with NO contact push button on X2-M, auto reset with terminals X2-M bridged.

X3: With open terminal: alarm delay = 0.5 s, bridged with M no time delay.

Start up delay
A start up delay (t_A , 0 ... 50 s) is adjusted by connecting terminal X1 with M via a resistor 0... 500 kOhm (details see technical data) and it is initiated when the power supply is connected. During this time the frequency is not monitored and both output relays are energised.

If the connection X1-M is interrupted (resistance > 500 kOhm), the start up delay is permanent, this allows to disable the monitoring by an external contact until a system reaches the operational state. Closing the external contact will initiate the start up delay determined by a connected resistor. If no start up delay is required X1-M needs to be bridged.
The X1-M connection is necessary to enable the monitoring of the frequency.
During elapse of the sart up delay the yellow LEDs <f1 and >f2 flash with a 2 Hz frequency. to adjust a certain time in seconds the number of flashes can be counted as setting aid. The number of flashes divided by 2 gives the delay time in seconds.

Manual reset
To store the alarm states for over or underfrequency, the X2 terminal needs to be unconnected. The alarm storing has effect on the relays and corresponding LEDs By bridging X2-M or disconnecting the power supply the alarm state is reset.

Variants with Analogue Output Indicating the Actual Speed / Frequency

With this variant the programming terminal X3 is replaced by terminal UA or IA, that provides an analogue signal proportional to the speed with reference to terminal 0V. This signal is either 0 ... 10 V or 0 ... 20 mA or 4 ... 20 mA. As the X3 terminal is not available, these variants do not have an alarm delay.
With the variant /517 (NAMUR sensor input with analogue output 4 ... 20 mA) the analogue output also indicates a sensor or wiring failure by switching the output to 0 mA.
The analogue output has no galvanic separation to measuring input and the alternative auxiliary supply on terminals +U/0V.

Technical Data

Frequency Measuring Input

Universal Input (+U / P / E 0V)

for PNP-, NPN-, 2-wire sensors, contacts and voltages, connection see application examples;
suitable for all proximity sensors according to IEC / EN 60947-5-2 (VDE 0660 part 208)
built in power supply approx. DC 24 V / max. 20 mA on terminals +U / 0V;
Alternatively external auxiliary voltage supply DC 24 V via terminals +U / 0V

Max. residual current
at 2-wire sensors: 2 mA (OFF state)
Max. voltage drops
at 2-wire sensors: 8 V (ON state)
Voltage control
Input resistance: Approx. 17 kΩ
Low-capability: ≤ 8 V
High-capability: ≥ 11 V

NAMUR Input (Variant /510) IN+ / IN-

for NAMUR sensors according to IEC/EN 60947-5-6 (VDE 0660 part 212)
No-load voltage: Approx. 8.2 V
Input resistance: Approx. 1 kΩ
Short circuit current: Approx. 8 mA
response value
Low: Typ. 1.55 mA
High: Typ. 1.75 mA
Broken wire threshold: ≤ 0.15 mA
short circuit threshold: ≥ 6 mA

Alternatively external auxiliary voltage supply DC 24 V via terminals +U / 0V

Common Data for Inputs

Response value (f1 / f2)
10 ranges each: 1 ... 120.000 IPM

range	1	2	3	4	5	6	7	8	9	10
Imp. / min	1 to 4	3 to 12	10 to 40	30 to 120	100 to 400	300 to 1.200	1.000 to 4.000	3.000 to 12.000	10.000 to 40.000	30.000 to 120.000

oder 0,15 ... 20.000 Hz

range	1	2	3	4	5	6	7	8	9	10
Hz	0.15 to 0.6	0,5 to 2	1,5 to 6	5 to 20	15 to 60	50 to 200	150 to 600	500 to 2.000	1.500 to 6.000	5.000 to 20.000

Fine adjustment: Infinite 1:4 each range
Max. input frequency
(Impuls : Pause = 1 : 1)
Range 1 ... 4: 1.5 kHz
Range 5 ... 7: 5 kHz
Range 8 ... 10: 25 kHz
Min. pulse- and breaktime
Range 1 ... 4: 350 µs
Range 5 ... 7: 100 µs
Range 8 ... 10: 20 µs
the "higher" range of the f1 and f2 determines the above values.

Stability of the setting threshold at variation of auxiliary voltage and temperature: 2 %
Hysteresis: Fixed, approx. 5% at f1 and f2
Reaction time of Frequency monitoring: (Alarm delay set to 0)
Duration of 1 cycle (inverse value of adjusted frequency) + 10 ms
(at over frequency: inverse value of signal frequency + 10 ms)
Response delay:
with terminal X3 open: 0,5 s
with X3-M bridged: No response delay

Technical Data

Start up delay: Adjustable von 0 ... 50 s with resitor/potentiometer across terminals X1-M:

R / kΩ:	0	15	22	33	47	68	100	150	220	470	∞
t_v / s:	0	0.3	0.7	1.3	2.3	5	9	15	25	50	∞

Time between connection of auxiliary supply and ready to mesure Approx. 0,5 s (with start up delay is 0)

Auxiliary Voltage (A1-A2; bzw. +U / 0V)

Auxiliary voltage U_H: AC 115, 230, 400 V + DC 24 V each (via terminals +U / 0V)
(Terminals +U / 0V has no galvanic separation to measuring input)

AC/DC 24 ... 60, 110 ... 230 V (only for MH-version possible)

Voltage range
AC: 0.8 ... 1.1 U_H
DC: 0.85 ... 1.2 U_H
AC/DC: 0.75 ... 1.2 U_H
Frequency range
AC: 45 ... 440 Hz
Nominal consumption:
AC: approx. 4 VA
DC: approx. 2 W

Contact Output (11-12-14, 21-22-24 + 31-32-34, 41-42-44 bei MH 9055.39/5_ _)

Contacts:
MK 9055N.38/5_ _: 2 x 1 changeover contact
1 for over and underfrequency alarm each
MH 9055.39/5_ _: 2 x 2 changeover contacta
2 for over and underfrequency alarm each
Thermal curren I_{th}: 4 A
Switching capacity
to AC 15
NO contacts: 3 A / AC 230 V IEC/EN 60 947-5-1
NC contacts: 1 A / AC 230 V IEC/EN 60 947-5-1
to DC 13
NO contacts: 1 A / DC 24 V IEC/EN 60 947-5-1
NC contacts: 1 A / DC 24 V IEC/EN 60 947-5-1
Electrcal life
to AC 15 at 1 A, AC 230 V: 1,5 x 10^5 switch.cycl. IEC/EN 60 947-5-1
short circuit strength
max. fuse rating: 4 A gG / gL IEC/EN 60 947-5-1
Mechanicl life: ≥ 30 x 10^6 switching cycles

Analogue volt. output (variant /5_5, terminal "UA" against "0V")

Nominal output voltage: 0 ... 10 V, linear proportional to the speed / frequency, without galvanic separation to measuring input and DC 24 V-supply
Load: max. 10 mA
Scale: 0 V at 0 IPM / Hz
5 V at setting end of scale value of speed / frequency
10 V at input frequency = 2 x end of scale value
Accuracy: 3 %

Analogue current output (variant /5_6, or 5_7; terminal "IA" against "0V")

Output: 0 ... 20 mA bzw. 4 ... 20 mA, linear proportional to the speed / frequency, without galvanic separation to measuring input and DC 24 V-supply
Max. burden: 500 Ω
Scale: 0 mA e.g. 4 mA at 0 IPM / Hz
10 mA e.g. 12 mA at setting end of scale value
20 mA at input frequency = 2 x end of scale value
Fault signal at NAMUR input: at output 4 ... 20 mA (variant /017)
on sensor failure currentt drops tp 0
Accuracy: 3 %

Technical Data

General Data

Nominal operating mode: continuous operation
Temperature range
Operation: - 20 ... + 60 °C
Storage: - 20 ... + 60 °C
Altitude: < 2,000 m
Clearance and creepage distance
rated impulse voltage / pollution degree:
Contact to measuring input: 4 kV / 2 IEC 60 664-1
Contact to auxiliary circuit: 4 kV / 2 IEC 60 664-1
Contact to Contact: 4 kV / 2 IEC 60 664-1
Auxiliary circuit A1-A2 to measuring input: 4 kV / 2 IEC 60 664-1
Programming terminals M-X1-X2-X3: without galv. separat. to measuring input
Auxiliary voltage DC 24 V (an +U / 0V): without galv. separat. to measuring input
Analogue output, optional (UA / IA): without galv. separat. to measuring input
EMC
Electrostatic discharge: 8 kV (air) IEC/EN 61 000-4-2
HF-irradiation
80 MHz ... 1 GHz: 12 V / m IEC/EN 61 000-4-3
1 GHz ... 2.7 GHz: 10 V / m IEC/EN 61 000-4-3
Fast transients: 2 kV IEC/EN 61 000-4-4
Surge voltage between wires for power supply: 1 kV IEC/EN 61 000-4-5
HF-wire guided 10 V IEC/EN 61 000-4-6
Interference suppression: Limit value class B EN 55 011
Degree of protection:
Housing: IP 40 IEC/EN 60 529
Terminals: IP 20 IEC/EN 60 529
Housing: thermoplastic with VO behaviour acc. to UL subject 94
Vibration resistance: Amplitude 0.35 mm frequency 10 ... 55 Hz IEC/EN 60 068-2-6
Climate resistance: 20 / 060 / 04 IEC/EN 60 068-1
Terminal designation: EN 50 005
Wire connection: 1 x 4 mm^2 solid or
2 x 2.5 mm^2 solid or
1 x 2.5 mm^2 stranded wire with sleeve DIN 46 228-1/-2/-3/-4 oder
2 x 1.5 mm^2 stranded wire with sleeve DIN 46 228-1/-2/-3/
Wire fixing: Plus-minus terminal screws M3,5 box terminals with wire protection
Fixing torque: 0.8 Nm
Mounting: DIN-rail IEC/EN 60 715
Weight:
MK 9055N.38/5_ _ ,
MH 9055.38/5_ _: Approx. 210 g
MH 9055.39/5_ _: Approx. 360 g

Dimensions

Width x height x depth:
MK 9055N/5_ _: 22.5 x 90 x 97 mm
MH 9055/5_ _: 45 x 90 x 97 mm

Standard Type

MK 9055N.38/500 1 ... 120.000 IPM U_H AC 230 V
Article number: 0058718

- 2 adjustable frequency thresholds in 10 ranges each: 1 ... 120.000 IPM
- Response value unfinitely adjustable 1:4
- Universal input for PNP-, NPN-, 2-wire-sensors, contacts, voltage
- Monitoring mode 2-level or window selectable
- Hysteresis: Fixed approx. 5 %, for f1 and f2
- Alarm delay via terminal programmable: 0 / 0.5 s
- Response delay: Settalbe with external resitor to 0 ... 50 s
- Alarm storing or auto-reset selectable
- Auxiliary voltage U_H: AC 230 V + DC 24 V
- Energized on trip
- Output: 2 changeover contacts
- Width: 22.5 mm

Variants

M_ 9055_.3_ /5_ _

- 0 Standard
- 5 Analogue output 0 ... 10 V (instead of terminal X3)
- 6 Analogue output 0 ... 20 mA (instead of terminal X3)
- 7 Analogue output 4 ... 20 mA (instead of terminal X3)

- 0 Universal input (standard)
- 1 NAMUR input with sensor monitoring

Ordering example for variants

MK 9055N .38 /500 1 ... 120.000 IPM U_H AC 230 V

- Auxiliary voltage
- Response value 1 ... 120.000 IPM or 0.15 ... 20.000 Hz
- Variant, if required
- Contacts
- Type

Application Examples

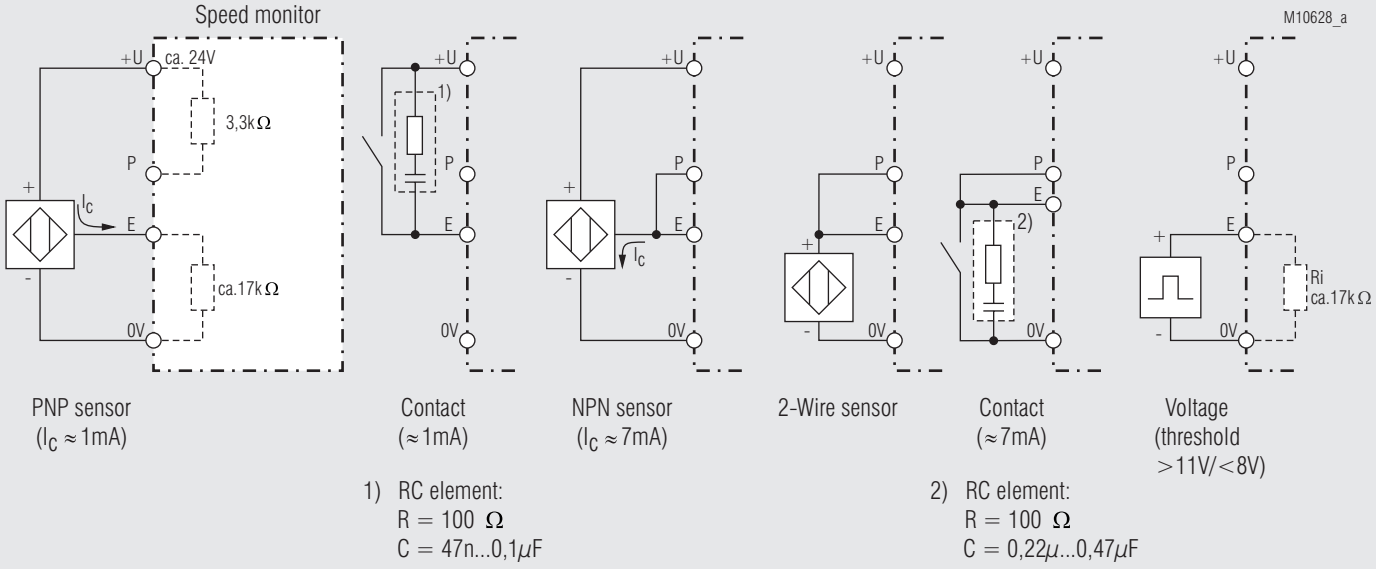

1) RC element:
R = 100 Ω
C = 47n...0,1µF

2) RC element:
R = 100 Ω
C = 0,22µ...0,47µF

Universal input

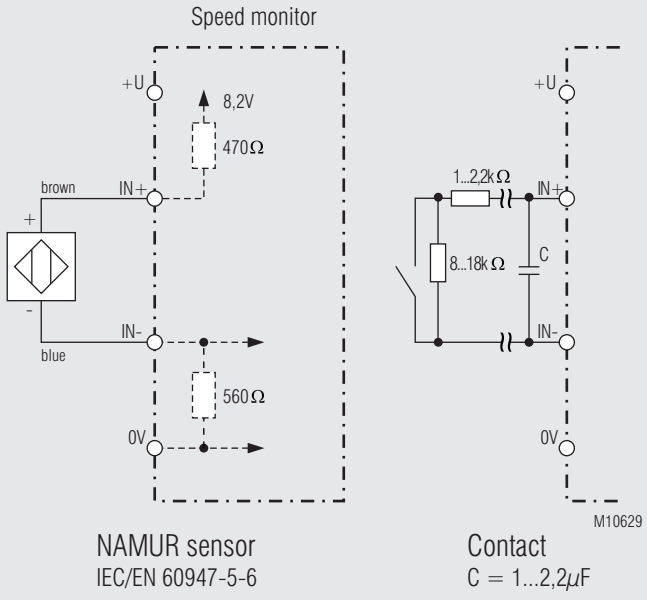

NAMUR input only at M_ 9055.3_/51_

Initiators (proximity sensors), inductive

Type	NA 5001.01.10 pnp NA 5001.01.20 npn	NA 5002.01.34 pnp/npn	NA 5005.01.34 pnp/npn	NA 5010.01.10 pnp NA 5010.01.20 npn
Dimensions	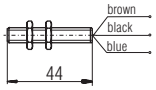 M8x1 SW13 M7266	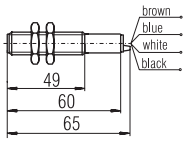 M12 x 1 SW 17 M7267	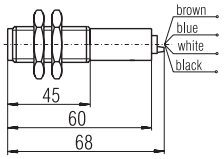 M 18 x 1 SW 24 M7268	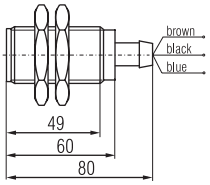 M30 x 1,5 SW 36 M7269
Enclosure	Metal	Metal	Metal	Metal
Switching distance S_n	1 mm	2 mm	5 mm	10 mm
Switching frequency	5 000 Hz	1 000 Hz	300 Hz	200 Hz
Hysteresis	2 ... 10 %			
Repeat accuracy	5 %			
Voltage range	10 ... 30 V			
Residual ripple	< 10 %			
Continuous current	≤ 200 mA	≤ 100 mA	≤ 100 mA	≤ 400 mA
Output	.10 pnp NO .20 npn NO	.34 pnp NO + npn NO	.34 pnp NO + npn NO	.10 pnp NO .20 npn NO
Indication of output state	LED			
Ambient temperature	- 25 ... 70°C			
Temperature influence	10 %			
Degree of protection	IP 67			
Connection wire	2 m			
Fixing torque	4 Nm	15 Nm	40 Nm	100 Nm
Weight	45 g	70 g	120 g	270 g

Connection Table MK9055N.12/50x, MH9055.12/50x

Type	Wire	Terminal on MK 9055N / MH 9055
NA 5001.01.10	brown +	+ U
	blue -	0 V
	black NO	E
NA 5002.01.34 NA 5005.01.34	brown +	+ U
	blanc +	+ U
	blue -	0 V
	black NO	E
NA 5010.01.10	brown +	+ U
	blue -	0 V
	black NO	E

Connection Table MK9055N.12/50x, MH9055.12/50x

Type	Wire	Terminal on MK 9055N / MH 9055
NA 5001.01.20	brown +	+ U
	blue -	0 V
	black NO	P, E
NA 5002.01.34 NA 5005.01.34	brown +	+ U
	blanc NO	P, E
	blue -	0 V
	black -	0 V
NA 5010.01.20	brown +	+ U
	blue -	0 V
	black NO	P, E