Product Data Sheet | 5114N/2-060



5114N/2-060

INDEX

1 General 3

2 Mechanics 3

2.1 General 3
2.2 Connections 3

3 Operating Data 5

3.1 Operating Data - Electrical Interface - Input 5
3.2 Electrical Operating Data 6
3.3 Operating Data - Electrical Interface -Output 7
3.4 Electrical Features 8
3.5 Aerodynamic 9
3.6 Sound Data 10

4 Environment 10

4.1 General 10
4.2 Climatic requirements*) 10

5 Safety 11

5.1 Electrical Safety 11
5.2 Approval Tests 11

6 Reliability 11

6.1 General 11

1 General

Fan type	Fan	
Rotational direction looking at rotor	counterclockwise	
Airflow direction	Air outlet over struts	
Bearing system	Ball bearing	
Mounting position	any	

2 Mechanics

2.1 General

Width	135,0 mm	
Height	135,0 mm	
Depth	38,0 mm	
Weight	0,650 kg	
Housing material	Metal	
Impeller material	Metal	
Max. torque when mounted across both mounting flanges Screw size	wire outlet corner: 190 Ncm remaining corners: 240 Ncm ISO 4762 - M4 degreased, without an additional brace and without washer	

2.2 Connections

Electrical connection	Wires	
Length of lead wire Tolerance	L = 310 mm +- 10,0 mm	
Wire gauge (AWG)	22	
Insulation diameter	1,70 mm	
Contact	see drawing	



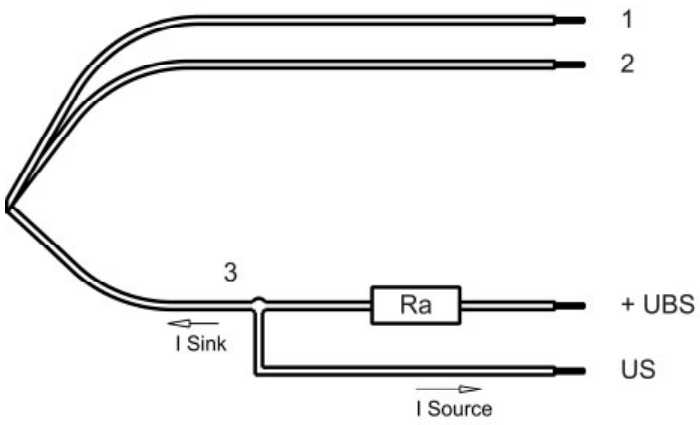

	Colour	Operation
Wire 1	red	+ UB
Wire 2	black	- GND
Wire 3	white	Tacho

The auxilliaries shown on the schematic diagram (which are required for the intended use) are not part of our delivery.

3 Operating Data

3.1 Operating Data - Electrical Interface - Input

Control input	None

3.2 Electrical Operating Data

Measurement conditions: Normal air density = 1,2 kg/m3; Temperature 23°C +/- 3°C; Motor axis horizontal;warm-up time before measuring 5 minutes (unless otherwise specified).In the intake and outlet area should not be any solid obstruction within 0,5 m.

Δp = 0: corresp. to free air flow (see section 3.5)
I: corresp. to arithm. mean current value

Features	Condition	Symbol	Values		
Voltage range	Δp = 0	U	12,0 V		30,0 V
Nominal voltage	Δp = 0	U_N		24,0 V	
Power consumption Tolerance	Δp = 0 0001	P	2,1 W +- 17,5 %	9,1 W +- 12,5 %	15,0 W +- 15,0 %
Current consumption Tolerance	Δp = 0 0001	I	175 mA +- 17,5 %	380 mA +- 12,5 %	500 mA +- 15,0 %
Speed Tolerance	Δp = 0 0001	n	1.450 1/min +- 12,5 %	2.900 1/min +- 7,5 %	3.450 1/min +- 10,0 %
Starting current consumption				700 mA	
Inrush current				30 mA	

3.3 Operating Data - Electrical Interface -Output

Tacho type	/2 (Open collector)

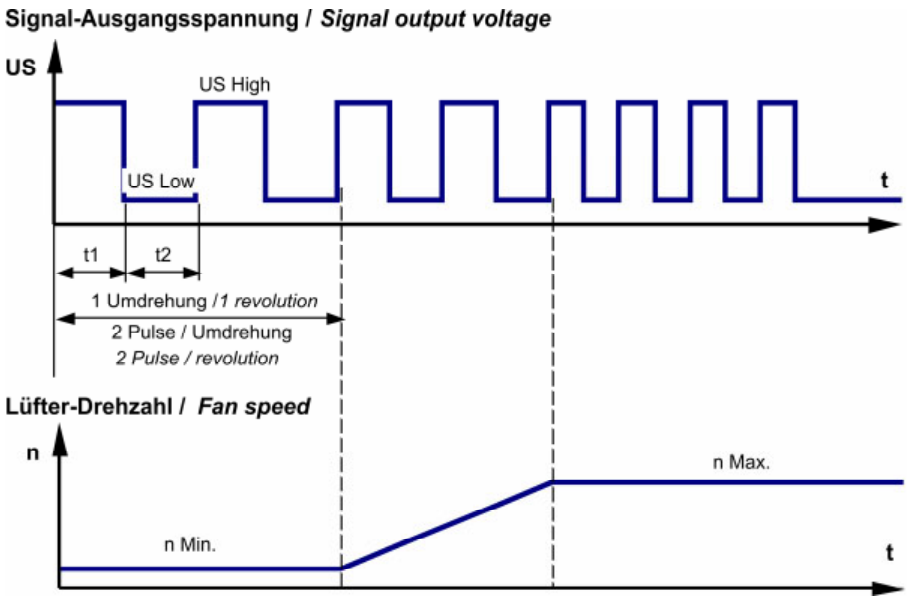

$$Ra = \frac{UBS - US\ Low}{I\ Sink}$$

Features	Note	Values
Tacho operating voltage (UBS)		Max.: 60,0 V
Tacho signal Low	I sink: 2 mA	<= 0,4 V
Tacho signal High	I source: 0 mA	60,0 V
Maximum sink current		<= 20 mA
External resistor	External resistor Ra from UBS to US required. All voltages measured to GND.	
Tacho frequency	(2 x n) / 60	
Tacho isolated from motor	No	
Slew rate		=> 0,5 V/us

Alarm type	None

3.4 Electrical Features

Electronic function	None	
Reversed polarity protection Max. residual current at Un	Rectifying diode IF <= 10 mA	
Locked rotor protection	Auto restart	
Locked rotor current at Un	approx. 700 mA	
Clock signal t3/t4 at locked rotor	Typical: 0,5 s / 5,0 s t3: 0,47 s... 0,52 s t4: 4,75 s... 5,25 s	

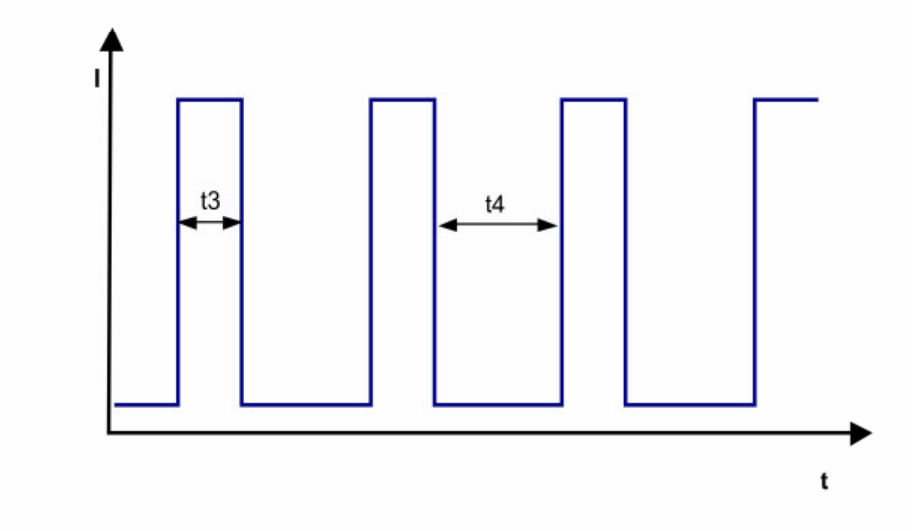

Internal Fuse:
Littlefuse NANO2(R) FUSE; Slow-Blow 452 Series; 4 A (Art.-Nr.: 0452004.MRL)

Max. current when decelerate at Unom. aprox 2.000 mA peak.

3.5 Aerodynamic

Measurement conditions:	Measured with a double chamber intake rig acc. to DIN EN ISO 5801. Normal air density = 1,2 kg/m3; Temperature 23°C +/- 3°C; In the intake and outlet area should not be any solid obstruction within 0,5 m.

a.) Operation condition:

2.900 1/min at free air flow

Max. free-air flow (Δp = 0 / $\dot{V}$ = max.)	260,0 m3/h	
Max. static pressure (Δp = max. / $\dot{V}$ =0)	122 Pa	

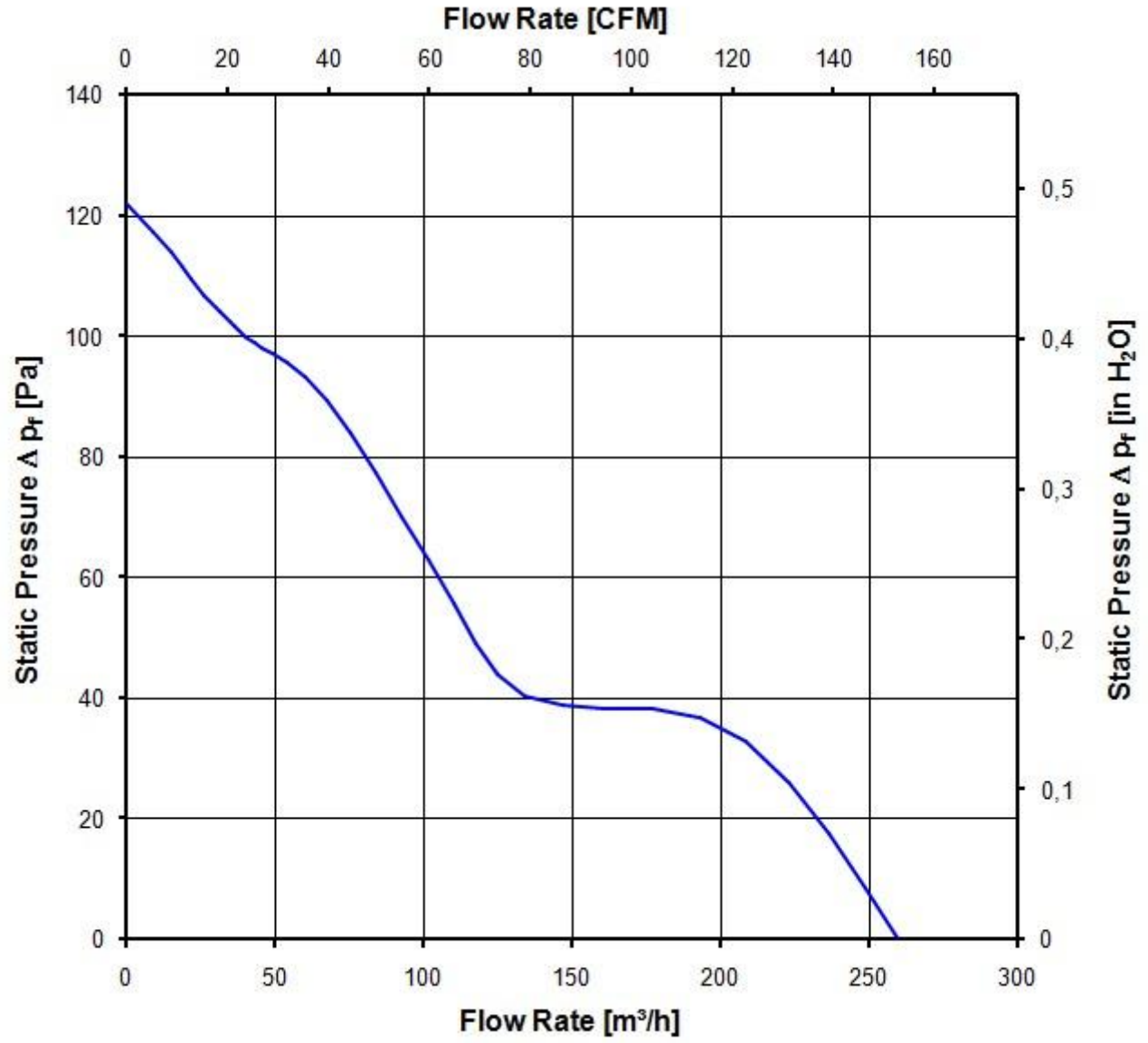

3.6 Sound Data

Measurement conditions:	Sound pressure level: 1 Meter distance between microphone and the air intake. Sound power level: Acc. to DIN 45635 part 38 (ISO 10302) Measured in a semianchoic chamber with a background noise level of Lp(A) < 5 dB(A) For further measurement conditions see section 3.5

a.) Operation condition:

2.900 1/min at free air flow

Optimal operating point	200,0 m3/h @ 35 Pa	
Sound power level at the optimal operating point	6,1 bel(A)	
Sound pressure level at free air flow, measured in rubber bands	48,0 dB(A)	

4 Environment

4.1 General

Min. permitted ambient temperature TU min.	-25 °C	
Max. permitted ambient temperature TU max.	72 °C	
Min. permitted storage temperature TL min.	-40 °C	
Max. permitted storage temperature TL max.	80 °C	

4.2 Climatic requirements*)

Humidity requirements	humid heat, constant; according to DIN EN 60068-2-78, 14 days	
Water exposure	None	
Radiation exposure	None	
Dust requirements	None	
Salt fog requirements	None	
Harmful gas requirements	None	

*) Permittet application area:
The product is intended for use in sheltered rooms with controlled temperature and controlled humidity. Directly exposure to water must be avoided.

Pollution degree 1 (according DIN EN 60664-1)
There is either no pollution or it occurs only dry, non-conductive pollution. The pollution has no negative impact.

5 Safety

5.1 Electrical Safety

Dielectric strength DIN EN 60950 (VDE 0805) and DIN EN 60335 (VDE 0700) A.) Type test Measuring conditions: After 48h of storage at 95% R.H. and 25°C. No arcing or breakdown is allowed! All connections together to ground. B.) Routine test Measuring conditions: At indoor climate. No arcing or breakdown is allowed! All connections together to ground.	 500 VAC / 1 Min. 500 VAC / 1 Sec.	
Isolation resistance Measuring conditions: After 48h of storage at 95% R.H. and 25°C measured with U=500 VDC for 1 min.	RI > 10 MOhm	
Air and leakage distances	1,0 mm / 1,2 mm	
Protection class	III	

5.2 Approval Tests

CE	Yes
UL	Yes / UL507, Electric Fans
VDE	Yes / Approval acc. to EN 60950 (VDE 0805) - Information technology equipment
CSA	Yes / C22.2 No. 113 Fans and Ventilators
CCC	No

The approval tests are observed to:
U approval max.:30,0 V @ TU approval max.: 72,0 °C

6 Reliability

6.1 General

Life expectancy L10 at TU = 40 °C	80.000 h	
Life expectancy L10 at TU max.	37.500 h	
Life expectancy L10 IPC (40 °C)	135.000 h	

Copy of this document and giving it to others and the use or communication of the contents thereof, are forbidden without express authority. Offenders are liable to the payment of damages. All rights are reserved in the event of the grant of a patent or the registration of a utility model or design.

Schutzvermerk nach DIN 34 beachten

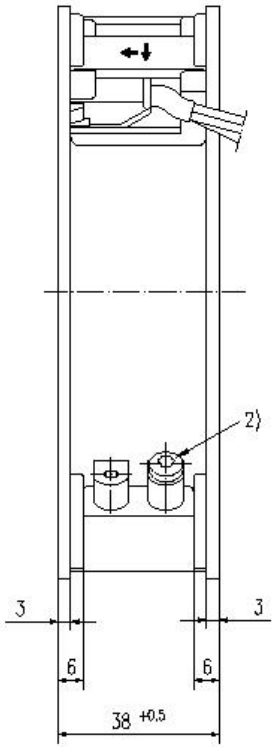

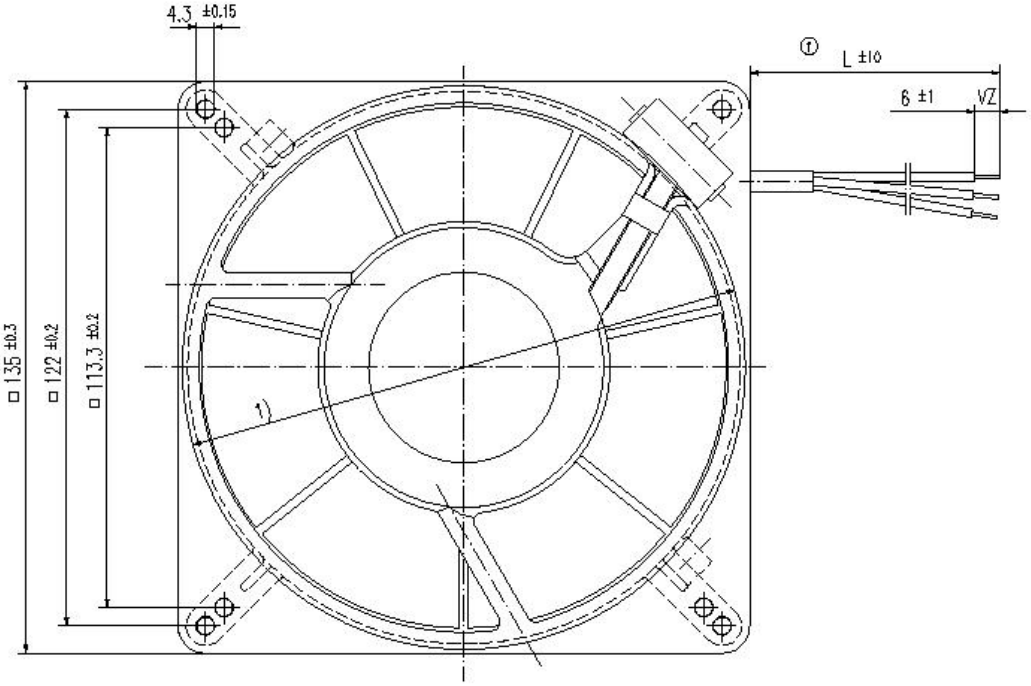

ⓕ Anzahl und Länge der Litzen
siehe Bv – Bl.1

Axialspiel mit Feder spielfrei verspannt.

1) Durchmesser für Montagewand 133 +1

2.) Kleinspannungslüfter ohne Schraube:
ⓒ Duo-Taptite nach DIN 7500, CM 4x8, Torx

083
210
232
235
240
516

UV = unverzinnt
VZ = verzinnt
AV = angeschnitten u. vorgezogen

Toleranzierung: DIN 7167						ⓕ
Allgemeintoleranzen:						
f					Datum	Name
e				Erstellt		
d				Geprüft		
c						
Index	Änd.-Nr.	Datum	Geändert von	PAPST-MOTOREN GmbH & Co KG D-78112 St.Georgen Germany		
Zur Verwendung in Verteiler freigegeben von			an			

Artikel	Maßstab
Zchg.-Nr.	Blatt
Ers.f.Zchg.:	