Labor - Schütz GmbH

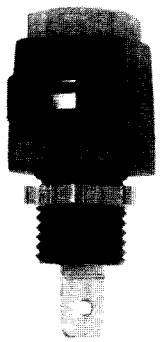

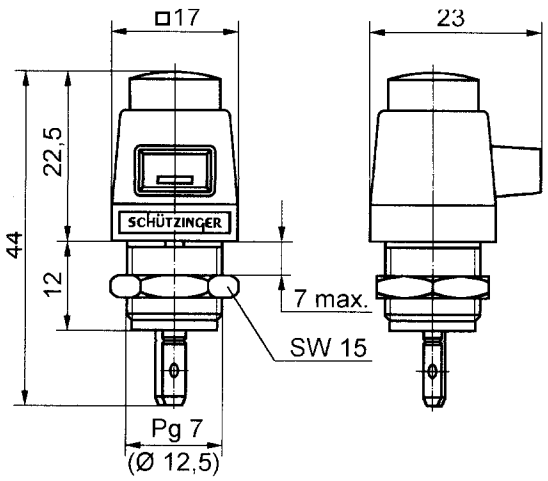

Safety quick-release terminal
- fully insulated

order no. ESD 798 / .. (colour)

- contact parts	**nickel-plated**
- insulation	PA 6.6 (Polyamid)
- panel thickness	0.8 mm - 7 mm

colours: see table

hole

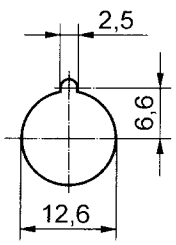

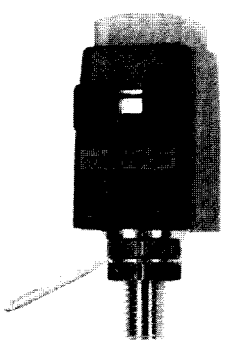

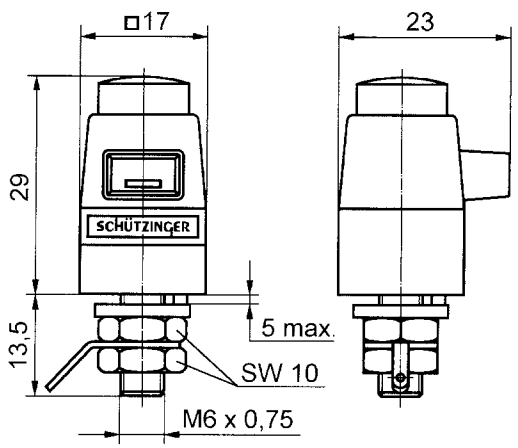

Safety quick-release terminal
fitting not insulated

order no. SDK 801 / .. (colour)

- contact parts	**nickel-plated**
- insulation	PA 6.6 (Polyamid)
- panel thickness	0.8 mm - 5 mm

colours: see table

hole

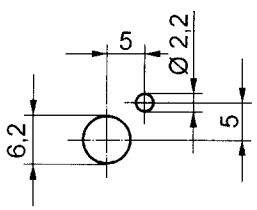

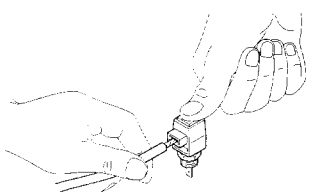

Functional description:
Wires and strands are connected between the spring jaws by pressing on the head of the terminal post.
Every quick-release terminal has an insertion window. The window size is approx. 8 mm x 4 m. A strong compression spring guarantees good contact. The pressure of the compression spring amounts to approx. 19 N. The quick-release terminals are particulary suitable for quick connection and testing of series appliances.

General information			Technical data				
order no.	max. torque for the nuts	colours	terminal	transition resistance	rated voltage	rated current	operating temperature
ESD 798 / ..(colour) contact parts nickel-plated	85 Ncm	black red	FSH 2,8x0,5 or soldering	< 3 mΩ	300 V CAT II	16 A	- 25 °C ... + 90 °C
SDK 801 / ..(colour) contact parts nickel-plated	120 Ncm	black red	soldering loop or cable lug	< 3 mΩ	300 V CAT II	16 A	- 25 °C ... + 90 °C

other colours and springs on request