M9H212

Position sensor

M9B3002-BPKG/B/AM/0,5M/ZH/US

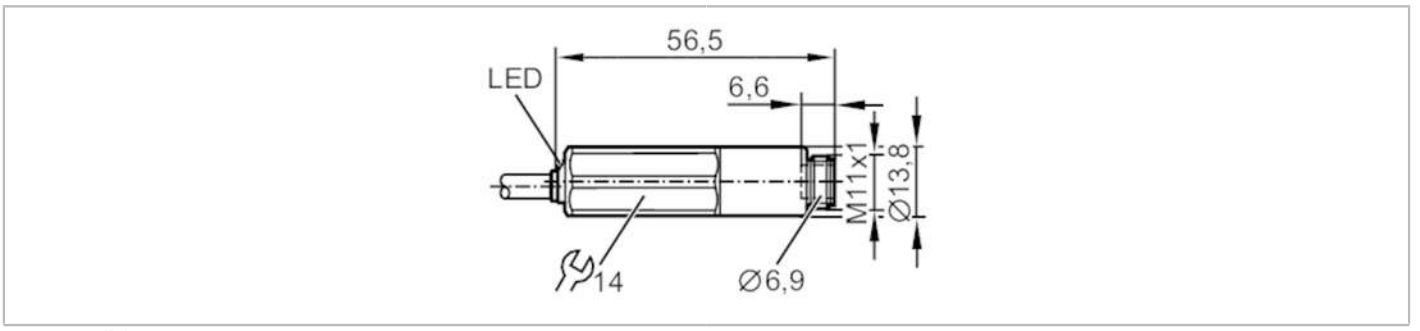

Product characteristics		
Electrical design		PNP
Output function		normally open
Dimensions	[mm]	M11 x 1 / L = 56.5
Application		
Application		lubricant distributor with plunger
Media		detects ferrous metals
Pressure rating	[bar]	350
Electrical data		
Operating voltage	[V]	10...60 DC
Rated insulation voltage	[V]	60
Current consumption	[mA]	< 20
Protection class		III
Reverse polarity protection		yes
Max. power-on delay time	[ms]	300
Outputs		
Electrical design		PNP
Output function		normally open
Max. voltage drop switching output DC	[V]	2.5
Max. leakage current	[mA]	0.1
Permanent current rating of switching output DC	[mA]	100
Switching frequency DC	[Hz]	50
Short-circuit protection		yes
Type of short-circuit protection		pulsed
Overload protection		yes
Detection zone		
Real sensing range Sr	[mm]	2 ± 10 %
Operating distance	[mm]	0...1.62
Accuracy / deviations		
Hysteresis	[% of Sr]	3...15

M9H212

Position sensor

M9B3002-BPKG/B/AM/0,5M/ZH/US

Operating conditions			
Ambient temperature	[°C]	-25...70	
Note on ambient temperature		Operating voltage: <60V	
Ambient temperature	[°C]	-40...85	
Note on ambient temperature		Operating voltage: <45V	
		for flexibly laid cable: -25 °C	
		for firmly laid cable: -40 °C	
Protection		IP 65; IP 67	
Tests / approvals			
EMC		EN 61000-4-2 ESD	4 kV CD / 8 kV AD
		EN 61000-4-3 HF radiated	10 V/m 80...2000 MHz
		EN 61000-4-4 Burst	2 kV
		EN 61000-4-6 HF conducted	10 V 0,15...80 MHz
		EN 61000-4-8	30 A/m
		EN 55011	class B
		noise emission and noise interference according to the automotive directive 95/54/EC	E1 type approval
		conducted interference in 24 V networks to ISO 7637-2: 2004 (pulse 1 to 4)	
		pulse	1 2a 2b 3a 3b 4
		severity level	III III III III III III
		failure criterion	C B C A A C
Vibration resistance		EN 60068-2-6 Fc	50x 20 g / 10...3000 Hz -20 °C
		EN 60068-2-6 Fc	50x 20 g / 10...3000 Hz +50 °C
Shock resistance		EN 60068-2-27 Ea	3 x 100 g 11 ms / -25 °C
		EN 60068-2-27 Ea	3 x 100 g 11 ms / +85 °C
Continuous shock resistance		EN 60068-2-27 Ea	4000 x 40 g 6 ms / -20 °C / 50 °C
MTTF	[years]	1181	
Mechanical data			
Weight	[g]	78.9	
Mounting		flush mountable	
Dimensions	[mm]	M11 x 1 / L = 56.5	
Thread designation		M11 x 1	
Materials		sensing face: stainless steel (1.4404 / 316L); housing: stainless steel (1.4404 / 316L); end cap: TPU	
Tightening torque	[Nm]	< 18	
Process connection		threaded connection M11 x 1 external thread	
Displays / operating elements			
Display		switching status	LED, yellow
Remarks			
Pack quantity		1 pcs.	

M9H212

Position sensor

M9B3002-BPKG/B/AM/0,5M/ZH/US

Electrical connection

Cable: 0.5 m, PUR

Connector: 1 x M12; coding: A



