electronic time-lag switches



4 126 02



Space for supply busbar



0 047 04

Dimensions **see e-catalogue**

Designed for supply busbar compatibility
Power supply: 230 V∿ - 50/60 Hz
Switches a lighting circuit for a specific time
Self-protection in the event of blocked pushbutton

Pack	Cat.Nos	Time-lag switch	Numbers of modules
10	4 126 02	Resettable 230 V∿ - 50/60 Hz Timing adjustable from 0.5 sec to 10 min Manual override contact Output 16 A - 250 V∿ - μ cos φ = 1 2000 W incandescent/halogen 2000 W halogen - 230 V∿ 1000 VA fluo - series compensated 120 VA fluo - parallel compensated 14 μF 100 VA compact fluorescent 1000 W energy saving lamp automatic 3-wire or 4-wire connection	1

Pack	Cat.Nos	Multi-function time-lag switch	Numbers of modules
10	0 047 04	Resettable 230 V∿ - 50/60 Hz Timing adjustable from 0.5 sec to 12 min Operation with 3 or 4 wires a utomatically recognised by the time-lag switch - Inputs for separate control 8-230 V (presence detection, lighting control by door entry system etc.) - Switch-off pre-warning function, display of time-lag end - Long duration function (1 hour) and manual switch-off Output 16 A - 250 V∿ - μ cos φ = 1 3680 W incandescent/halogen 2000 W halogen 230 V∿ 1000 VA fluo - parallel compensated ≤ 100 μF 2000 VA compact fluorescent 500 W halogen lamp + ferromagnetic transformer 2000 W halogen lamp + electronic transformer - Specially suited to energy saving lamps 1000 W energy saving lamp	1

Pack	Cat.Nos	Automatic staircase time-lag switch for wall mounting 230 V - 50 Hz	Type of delay adjustable	Type
1	0 497 83	Switches a lighting circuit during a determined period Controlled by illuminated push-button 50 mA max 3 wire connection Output : 1 contact Contact rating 10 A - 250 V∿ - cos φ = 1	Electronic 0.5 to 10 min.	Resettable

■ Multi-function time-lag switch

4-wire

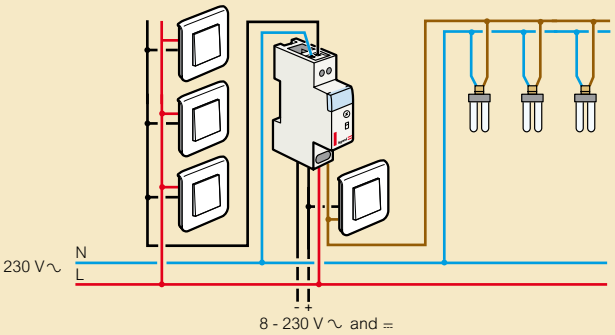

3-wire

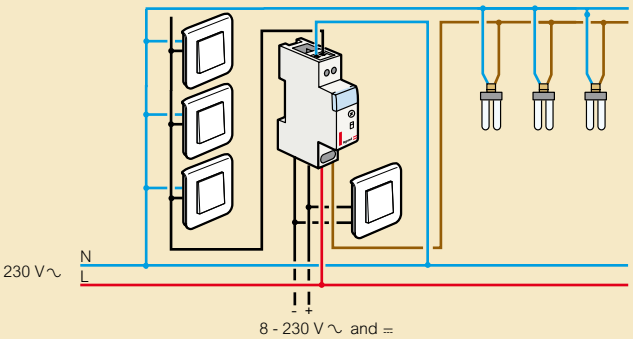

Multi-function time-lag switch: lighting control by door entry system

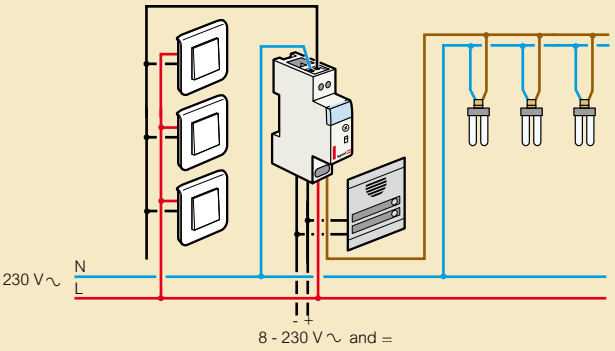

Switch-off pre-warning function

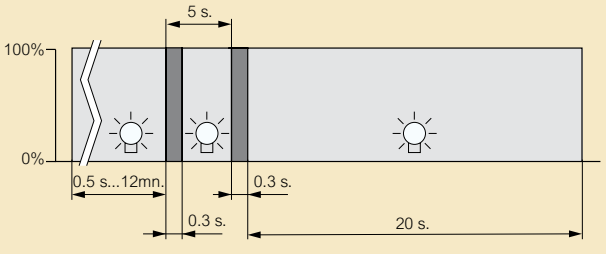

For fluorescent and energy saving lamps the switch-off period is longer than 0.3 s, because of re-starting time required by the lamps

Red catalogue numbers: New products