- **-1 ... 600 bar in different pressure ranges**
- **Port size G1/4 or flange mounting with adapter**
- **Two output options; 2 x digital outputs or 1 x digital and 1 x Analogue (both options IO-Link configurable)**
- **Multicolour 4-digit display with configurable colour change (red/green) at set point**
- **Upper body can be rotated 345° relative to the process connection for easy alignment of the display**
- **Suitable for harsh industrial and process control environments**
- **High overpressure resistance**





CE IO-Link

Technical features

Medium:
For neutral and aggressive, gaseous and liquid fluids
Pressure range:
-1 ... 1 bar (-14,5 ... 14,5 psi)
-1 ... 10 bar (-14,5 ... 145 psi)
0 ... 16 bar (0 ... 232 psi)
0 ... 40 bar (0 ... 580 psi)
0 ... 100 bar (0 ... 1450 psi)
0 ... 160 bar (0 ... 2320 psi)
0 ... 250 bar (0 ... 3626 psi)
0 ... 400 bar (0 ... 5801 psi)
0 ... 600 bar (0 ... 8702 psi)
Pressure type:
Relative pressure
Switching pressure difference:
Programmable
Switching point:
Adjustable between
0 ... 100% of full scale (FS)
Reset point:
Adjustable between
0 ... 100% of full scale (FS)
(smallest adjustable pressure switching difference between switching point and reset point ≥ 0,5% of full scale (FS))

Display:
Alphanumeric display, 4-digit (red/green), programmable pressure units: bar, PSI, Mpa
Mounting position:
Optional
Total accuracy:
±0,5% of full scale (FS) - without temperature sensitivity
Linearity:
±0,25% + 1 display step size
Shock proof:
50 g, (11ms), DIN EN 60068-2-27
Vibration proof:
20 g, 10 ... 2000 Hz,
DIN EN 60068-2-6
Degree of protection acc. DIN EN 60529:
IP67 (with plug mounted)

Weight:
0,26 kg (0.57 lbs)
Temperature sensitivity:
Zero-point: ±0,2% of maximum operating pressure range (FS) per 10 Kelvin
Pressure range: ±0,2% of maximum operating pressure range (FS) per 10 Kelvin
Ambient/Media temperature:
Ambient:
-25 ... +80°C (-13 ... +176°F)
Media:
-25 ... +80°C (-13 ... +176°F)
Air supply must be dry enough to avoid ice formation at temperature below +2°C (+35°F)

Materials:
Housing:
Stainless steel (1.4404 / 316L); PBT+PC-GF30; PBT-GF20; PC
Wetted parts: Stainless steel (1.4404 / 316L); Al2O3 (ceramics); FKM

Electrical parameters

Electrical connection:
M12 x 1 (contacts gold plated)
Power supply:
UB = 18 …30 VDC
reverse-polarity protected (according to EN 50178 SELV/ PELV)
Permissible residual ripple:
10% (within UB)
Current consumption:
< 35 mA

Switching mode:
PNP/NPN
Output signal:
Switching signal; IO-Link (configurable)
Contact rating:
Imax
150 mA / -25 ...+80°C
200 mA / -25 ...+60°C
250 mA / -25 ...+40°C

Switching time:
< 3 ms
Signal delay:
On/Off 0 ... 50 s
Service life:
Min. 100 million switching cycles
Switching logic:
NO/NC programmable

Operating mode:
Hysteresis and window mode separately selectable for each output
Electromagnetic compatibility:
EN 61000-6-2; EN 61000-6-3

Our policy is one of continued research and development. We therefore reserve the right to amend, without notice, the specifications given in this document. (2019 - 9265b) © 2015 Norgren GmbH

Technical data - Output Signal 2 x PNP (1 x IO-Link, configurable)

Symbol	Port size	Pressure range (bar)	(psi)	Over pressure*1 (bar)	(psi)	Output Signal	Model
	G1/4	- 1 ... 1	-14.5 ... 14.5	10	145	2 x PNP	34D-V101G-DD1-AA
	G1/4	-1 … 10	-14,5 … 145	75	1090	2 x PNP	34D-V110G-DD1-AA
	G1/4	0 … 16	0 … 232	85	1225	2 x PNP	34D-P016G-DD1-AA
	G1/4	0 … 40	0 … 580	200	2900	2 x PNP	34D-P040G-DD1-AA
	G1/4	0 … 100	0 … 1450	300	4350	2 x PNP	34D-P100G-DD1-AA
	G1/4	0 … 160	0 … 2320	350	5075	2 x PNP	34D-P160G-DD1-AA
	G1/4	0 … 250	0 … 3625	500	7250	2 x PNP	34D-P250G-DD1-AA
	G1/4	0 … 400	0 … 5800	800	11580	2 x PNP	34D-P400G-DD1-AA
	G1/4	0 … 600	0 … 8700	800	11580	2 x PNP	34D-P600G-DD1-AA

Technical data - Output Signal 1 x PNP (1 x IO-Link, configurable), 1 x Analogue

Symbol	Port size	Pressure range (bar)	(psi)	Over pressure*1 (bar)	(psi)	Output Signal	Model
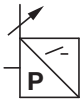	G1/4	- 1 ... 1	-14.5 ... 14.5	10	145	1 x PNP / 1 x analogue	34D-V101G-DA1-AA
	G1/4	-1 … 10	-14,5 … 145	75	1090	1 x PNP / 1 x analogue	34D-V110G-DA1-AA
	G1/4	0 … 16	0 … 232	85	1225	1 x PNP / 1 x analogue	34D-P016G-DA1-AA
	G1/4	0 … 40	0 … 580	200	2900	1 x PNP / 1 x analogue	34D-P040G-DA1-AA
	G1/4	0 … 100	0 … 1450	300	4350	1 x PNP / 1 x analogue	34D-P100G-DA1-AA
	G1/4	0 … 160	0 … 2320	350	5075	1 x PNP / 1 x analogue	34D-P160G-DA1-AA
	G1/4	0 … 250	0 … 3625	500	7250	1 x PNP / 1 x analogue	34D-P250G-DA1-AA
	G1/4	0 … 400	0 … 5800	800	11580	1 x PNP / 1 x analogue	34D-P400G-DA1-AA
	G1/4	0 … 600	0 … 8700	800	11580	1 x PNP / 1 x analogue	34D-P600G-DA1-AA

*1) Short-term pressure peaks are not allowed to exceed this limit value during operation.
Operative utilization of the over pressure is not permitted. The over pressure corresponds to the maximum testing pressure

Electrical connection M12 x 1 (2 x PNP)

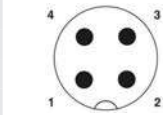

PIN-No.	Signal	Cable
1	+ UB	brown
2	Out 2 (PNP)	white
3	0 Volt	blue
4	Out 1 (PNP)/ IO-Link	black

Electrical connection M12 x 1 (1 x PNP, 1 x analogue)

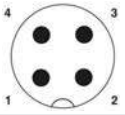

PIN-No.	Signal	Cable
1	+ UB	brown
2	Analogue 4 ... 20 mA / 0...10V	white
3	0 Volt	blue
4	Out 1 (PNP)/ IO-Link	black

Option selector

34D-★★★★★-★★ 1-AA

Pressure range (bar)	Substitute
- 1 ... 1	**V101G**
-1 … 10	**V110G**
0 … 16	**P016G**
0 … 40	**P040G**
0 … 100	**P100G**
0 … 160	**P160G**
0 … 250	**P250G**
0 … 400	**P400G**
0 … 600	**P600G**

Analogue-Type	Substitute
IO-Link, configurable	**1**
Output Signal	**Substitute**
2 x PNP	**DD**
1 x PNP / 1 x Analogue	**DA**

Mounting accessories

Flange adapter	Wall mounting kit	Mounting clamp	Label Tag Holder	Cover protection	Throttle screw	Adapter G1/4 - G1/4	Adapter G1/4 - 1/4 NPT
							
34D-FLANGE-ADPT	34D-BRKT-ANGLED	34D-BRKT-BODY	34D-LABEL-TAG	34D-COVER-PROTEC	34D-DAMPING-SCRW	34D-14G-G-ADPT	34D-14G-NPT-ADPT

Our policy is one of continued research and development. We therefore reserve the right to amend, without notice, the specifications given in this document. (2019 - 9265b) © 2015 Norgren GmbH

Accessories

Connector M12 x 1

4-pin, 90°	4-pin, 90°	4-pin, straight	4-pin, straight
			
0523058000000000 (2 m cable, 4-pin)	0523056000000000 (wireable without cable)	0523057000000000 (2 m cable, 4-pin)	0523055000000000 (wireable without cable)
0523053000000000 (5 m cable, 4-pin)		0523052000000000 (5 m cable, 4-pin)	

Dimensions pressure switch

Dimensions in mm
Projection/First angle

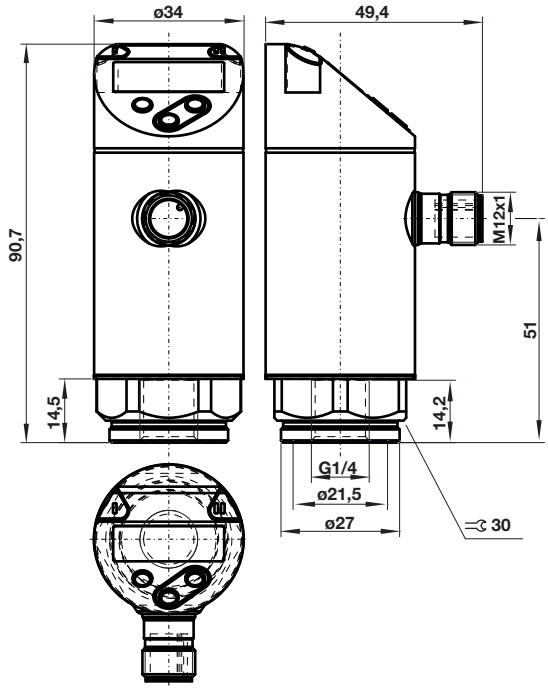

Dimensions accessories
Flange adapter
34D-FLANGE-ADPT

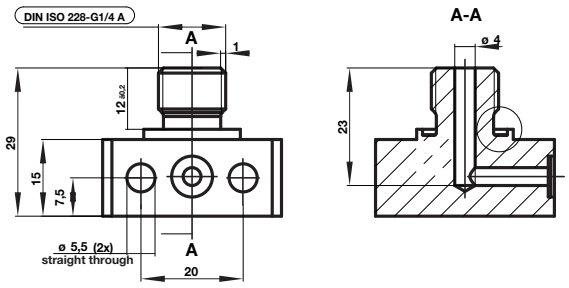

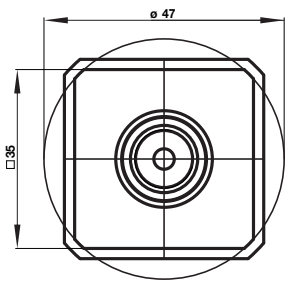

Our policy is one of continued research and development. We therefore reserve the right to amend, without notice, the specifications given in this document. (2019 - 9265b) © 2015 Norgren GmbH

Dimensions in mm
Projection/First angle

Wall mounting kit
34D-BRKT-ANGLED

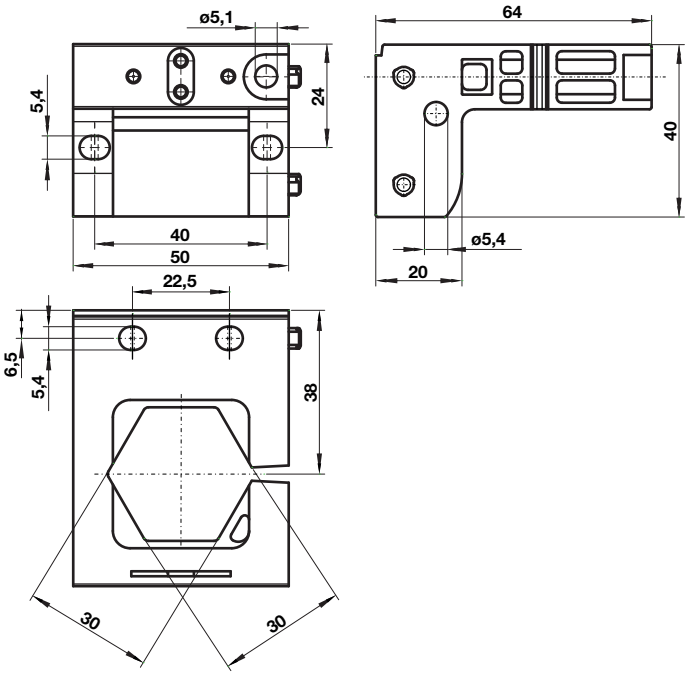

Mounting clamp
34D-BRKT-BODY

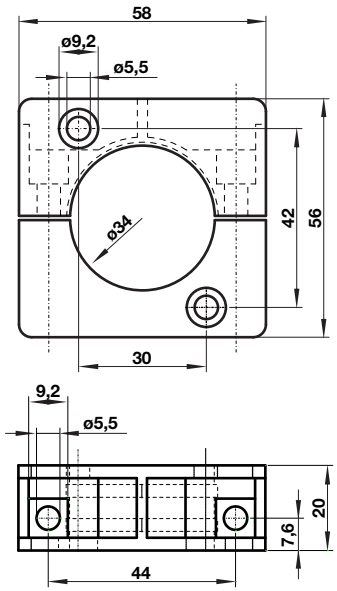

Cover protection
34D-COVER-PROTEC

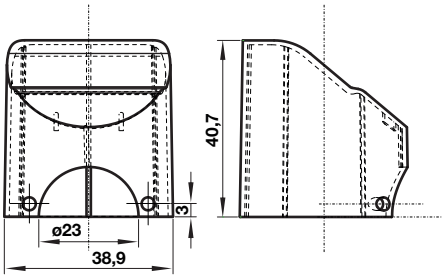

Adapter
34D-14G-G-ADPT

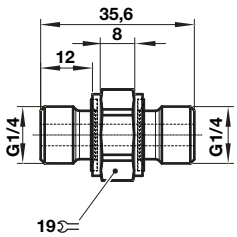

Adapter
34D-14G-NPT-ADPT

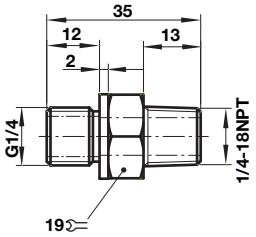

Our policy is one of continued research and development. We therefore reserve the right to amend, without notice, the specifications given in this document. (2019 - 9265b) © 2015 Norgren GmbH

Label tag holder
34D-LABEL-TAG

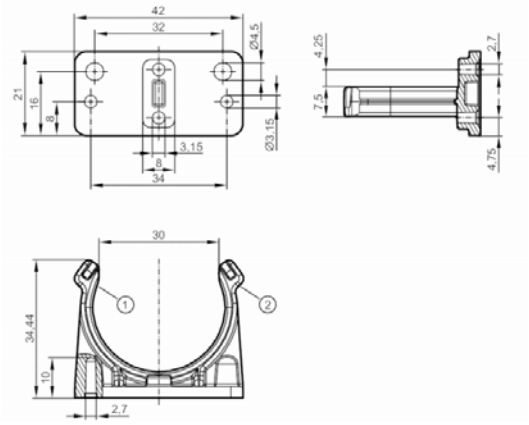

Throttle screw
34D-DAMPING-SCRW

Dimensions in mm
Projection/First angle

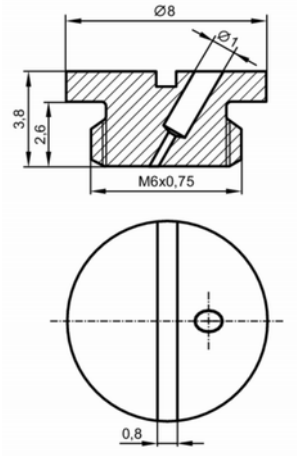

Warning

These products are intended for use in industrial compressed air and fluid systems only. Do not use these products where pressures and temperatures can exceed those listed under »**Technical features/data**«. Before using these products with fluids other than those specified, for non-industrial applications, life-support systems, or other applications not within published specifications, consult
IMI Precision Engineering, Norgren GmbH.

Through misuse, age, or malfunction, components used in fluid power systems can fail in various modes. The system designer is warned to consider the failure modes of all component parts used in fluid power systems and to provide adequate safeguards to prevent personal injury or damage to equipment in the event of such failure.
System designers must provide a warning to end users in the system instructional manual if protection against a failure mode cannot be adequately provided.
System designers and end users are cautioned to review specific warnings found in instruction sheets packed and shipped with these products.

Our policy is one of continued research and development. We therefore reserve the right to amend, without notice, the specifications given in this document. (2019 - 9265b) © 2015 Norgren GmbH