515 MPA series

Product overview

- Threaded body for panel thicknesses 0.5-3.5mm, panel cut-out 6.4mm diameter
- Stripped wire termination 164mm long, PVC stripped dimensions 10mm
- LED, Filament 6-28V 30-40mA and Neons 125-240V 0.8-1mA, as standard
- Neon-replacement LED version is fitted with a resistor and operates at 240V AC. Operating life 50,000 hours
- Polycarbonate lens/body, chrome bezel, supplied with nut and shakeproof washer
- Red, green, amber, clear and opal lens colour options as standard
- Maximum working temperature 80°C
- Custom wire lengths and specification to order

515 series



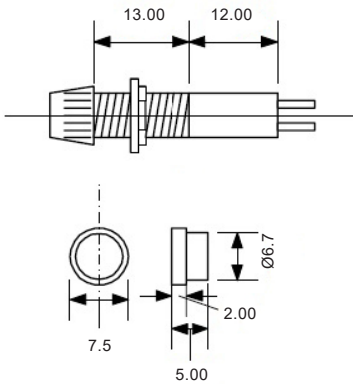

PART NO.	IND515	X	XX-	XXXX-	T/	XXX
515 Series Indicator	515					
Lens Type - Top Hat	2					
Stripped wire 164mm long	05					
LED pins	13					
LED, black cathode & white anode wires	LED					
LED, neon-replacement 240V 1mA	LED2					
Filament 6V 40mA, white wire	640					
Filament 12V 35mA, yellow wire	1235					
Filament 14V 40mA, yellow wire	1440					
Filament 24V 35mA, green wire	2435					
Filament 28V 25mA, green wire	2825					
Neon 125V 1mA, blue wire	125					
Neon 240V 0.8mA, red wire	240					
Transparent lens	T					
Lens colour: red	RED					
Lens colour: green	GRN					
Lens colour: amber	AMB					
Lens colour: clear	CLR					
Lens colour: opal	OPL					

E.g. IND515205-240-T/GRN - Top hat, Stripped wire, 240V, green