Alarm signal /17

Speed limit

- Alarm signal for speed monitoring
- Signal output via open collector
- The fan emits a continuous high signal during trouble-free operation within the permissible voltage range.
- Low signal when speed limit is not reached
- After elimination of the fault, the fan returns to its setpoint speed; the alarm signal reverts to high.

Available on request:

- Integrated signal storage for subsequent recognition of short-term faults (latch).
- Alarm circuit open collector or TTL.
- Electrically isolated for maximum device safety; Defects in the power circuit do not affect the alarm circuit.

Electrical hookup

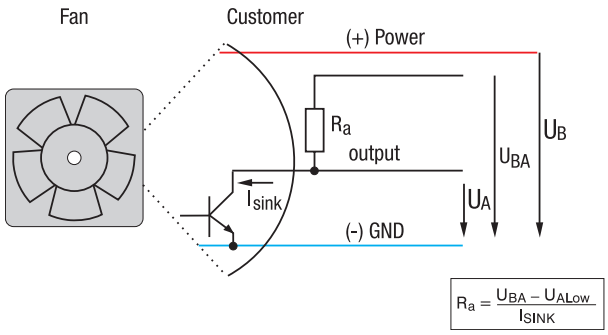

All voltages measured to ground.
External load resistor R_a from U_A to U_{BA} required.

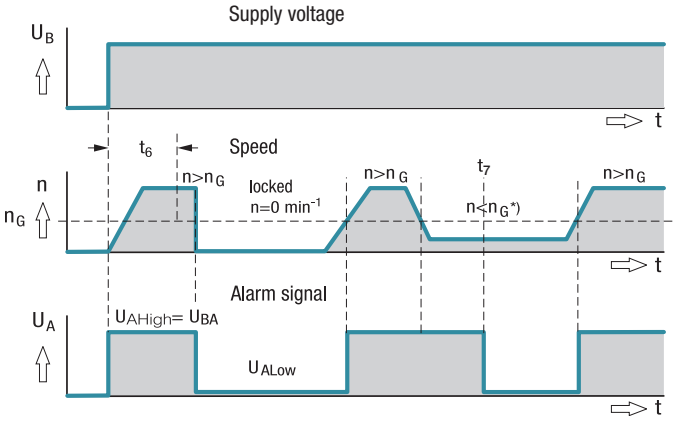

t_6 = Alarm signal suppression during startup
t_7 = Alarm delay time during run-up
* n < speed limit n_G by braking or locking

Alarm signal /19

Speed limit

- Alarm signal for speed monitoring
- Signal output via open collector
- The fan emits a continuous low signal during trouble-free operation within the permissible voltage range.
- High signal when speed limit is not reached
- After elimination of the fault, the fan returns to its setpoint speed; the alarm signal reverts to low.

Available on request:

- Integrated signal storage for subsequent recognition of short-term faults (latch).
- Alarm circuit open collector or TTL.
- Electrically isolated for maximum device safety; Defects in the power circuit do not affect the alarm circuit.

Electrical hookup

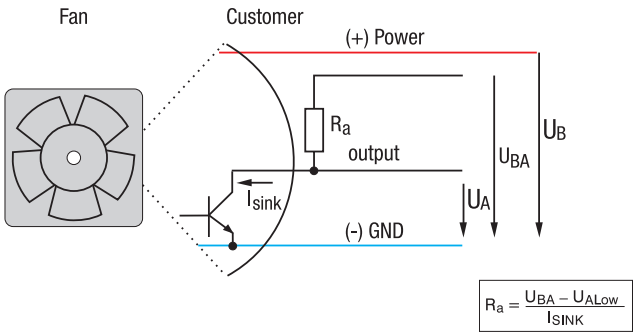

All voltages measured to ground.
External load resistor R_a from U_A to U_{BA} required.

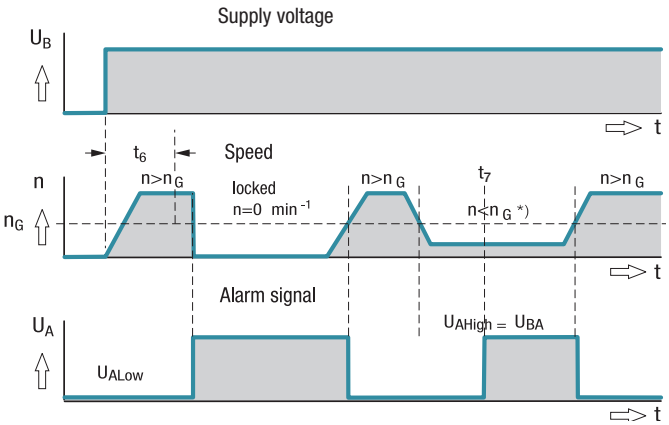

t_6 = Alarm signal suppression during startup
t_7 = Alarm delay time during run-up
* n < speed limit n_G by braking or locking

Note:
Fans that come with these fan specials could have variations with respect to the temperature range, voltage range, and power consumption compared to standard fans without specials.