BERNSTEIN



SMART Safety Sensor for Smart Factories – Non-contact Safety Sensor SRF

With innovative diagnostic system for the intelligent factory of the future

Industry 4.0
in safety technology



The SRF (Safety RFID) is a non-contact safety sensor, that monitors moveable safety guards, such as doors, flaps and hoods. This particularly compact sensor protects employees from injuries by shutting down or not starting up machines when the safety guard is not properly closed.

With its innovative diagnostic system, the SRF makes safety circuits suitable for Industry 4.0.

The system provides a multitude of diagnostic data of each sensor, even in a series connection, to support smart production.

Diagnostic data is fed into the machine control system via I/O Link or alternatively displayed on a smartphone by way of NFC technology. In this way, 20 different diagnostic information of each sensor can be retrieved and made available.

This diagnostic data delivers cost-effective predictive maintenance in a simple way. Through its advanced fault recognition capability, costly machine shutdowns can be prevented.

This way, your machinery and plant will work even more efficiently!

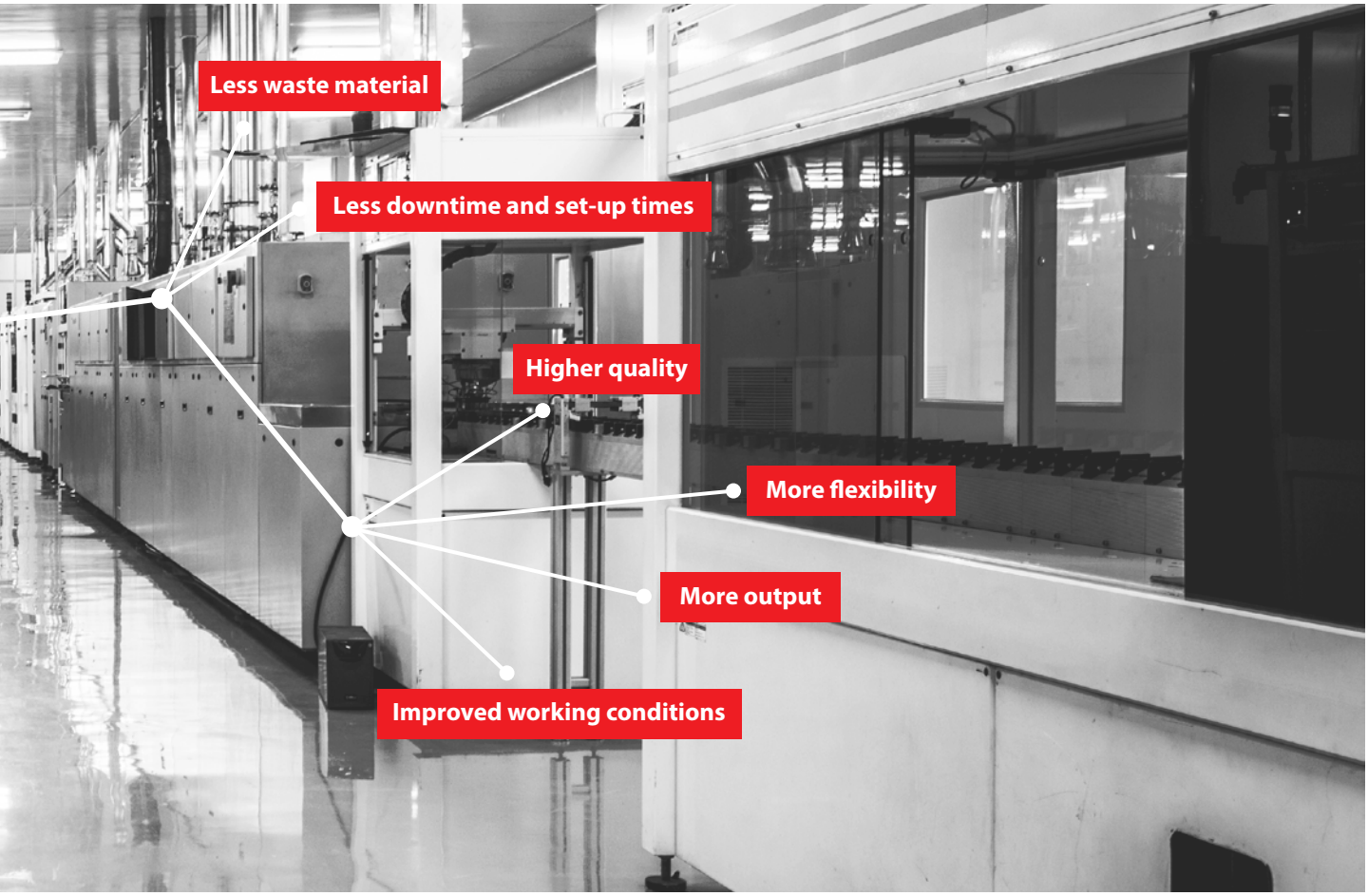

Innovative

- New innovative Daisychain Diagnostics (DCD)
- Reading diagnostics information through Android smartphone via NFC interface
- Transmission of data via I/O Link interface
- Simple and specific maintenance thanks to pre-failure monitoring
- Cost reduction by eliminating machine downtimes
- Connecting the sensor information of six different diagnostic circuits
- Support of an energy-optimised application: Voltage levels known at any time

Safe

- Safe sensors in Cat. 4, PL e or SIL CL 3
- Safe serial connection of SRF up to PL e, Cat. 4 / SIL CL 3
- Coded and unique actuator

Versatile

- Protection class of IP69
- Local reset button
- Compact design
- Diagnostics system DCD
- PNP diagnostics
- Fault tolerant output
- Single and series connection possible
- Connection via M12 plug

SRF
Benefits and advantages

- **Cost-saving:** thanks to a four-wire unshielded standard connection cable from sensor to sensor ❶
- **Compact:** small in size, flexible in use
- **Safe:** up to PL e – even in series connection, with high defeat protection (according to ISO 14119)
- Series connection of the sensors through internal safety electronics without compromising the safety level

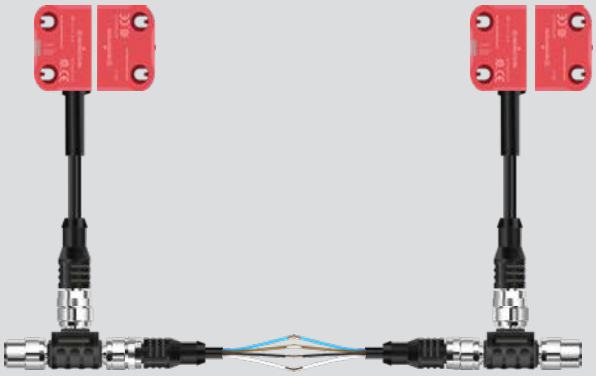

❶

Coding types

- Low coding level:
  Coded sensor with only one possible code
- High coding level:
  Coded sensor with more than 1000 different codes
- Unique coding: High coding level – but no spare actuator accepted

Diagnostics (not safety related)

- PNP diagnostics:
  Signalling contact as PNP NO output that indicates whether the safety guard is closed
- DCD System:
  Detailed diagnostic system DCD that submits a complete status image of a sensor, even in series connection (see also page 6 and 7)

Reset function

Local reset of the sensor to enable restart of the machine.

Fault tolerant outputs

The fault tolerant outputs prevent an unexpected machine stop and allow to run down the machine in a controlled manner.

This is how it works: If an error is detected at one output, the sensor indicates this with a flash code –whilst simultaneously transmitting the information via the DCD system. After 20 minutes, the second still intact output, will switch off.

Diagnostics
Benefits and advantages

- Comprehensive diagnostics information for each sensor and for the entire system
- Diagnostic data simply retrievable
- Time and cost savings during commissioning, maintenance and fault investigation
- Protection against unexpected machine stops though pre-fault detection
- Display of diagnostic data on smartphones via NFC
- Simple troubleshooting through reading out the fault memory via NFC
  also in case of missing power supply



Diagnostic system DCD

In order to use the comprehensive diagnostic functions, sensors with DCD system are necessary.
These are marked with a “5” in the type code: SRF-5/…

All the diagnostic information are not safety relevant!

The diagnostic data will be provided as follows:
- Directly via I/O Link or a I/O Link Master with gateway (for ex. Profinet, Ethercat etc.)
- Via the “SRF App” for Android for simple visualisation of the diagnostic information
- Via laptop with USB interface

As the diagnostic data is very extensive, it is divided into basic and extended information.
This allows simplified data processing when used with superior control systems.
The following information is available:

Basic information

Information	Meaning
Actuator detected	Actuator detected / Actuator not detected
Wrong actuator	Actuator code OK/ Actuator code not OK
Actuator code not taught-in	Actuator code saved/ Actuator code not saved
Actuator at the edge of the detection area	Actuator distance OK / Actuator at the edge of the detection area
Safety input 1	On / Off
Safety input 2	On / Off
Safety output 1	On / Off
Safety output 2	On / Off
Local reset	Local reset expected / Local reset not expected
Operating voltage warning	Operating voltage is OK / The operating voltage is +/- 5 % to the end of the voltage range
Operating voltage 24 V	Operating voltage is OK / Operating voltage outside specification (24 V +/- 20 %)

Extended diagnostics information

Information	Meaning
Additional sensor functions	Display of the additional function of the sensor, e. g. local reset, coding level, etc.
Number of remaining actuator teach-in operations	Depending on the sensor type, the number of teach-in cycles of new actuators is limited. This value shows the remaining number of teach-in cycles.
Received actuator code	Indication of the actuator code
Time “actuator in detection limit”	Indicates the time in hours since the actuator is located at the edge of the detection area
Output error switch-off time	The remaining time in minutes until the sensor switches off the safety outputs, after an error has been detected on one output channel.
Operating voltage warning	Information on the frequency of operating voltage warnings
Sensor temperature	Indicates the sensor temperature in °C
Supply voltage applied	Indicates the applied supply voltage in volts (V)
Actuator distance	Indicates the actuator distance in % to the maximum sensing distance.

Moreover, there is a fault memory which stores system-relevant data in order to simplify troubleshooting.

Information that are available in the fault memory

Information	Meaning
Operating voltage 24 V	Operating voltage outside specification (24 V +/- 20 %)
Wrong actuator	Actuator code OK/ Actuator code not OK
Actuator at the edge of the detection area	Actuator distance OK / actuator at the edge of the detection area
Status safety output 1	On / Off
Status safety output 2	On / Off

The error messages are stored in the diagnostics module using a time stamp and can be retrieved via all interfaces if needed. Thanks to the NFC function, this information can be read even if there is no voltage on the diagnostic module. This unique feature allows efficient troubleshooting and accelerates restart of defective machines.

SRF for series connection

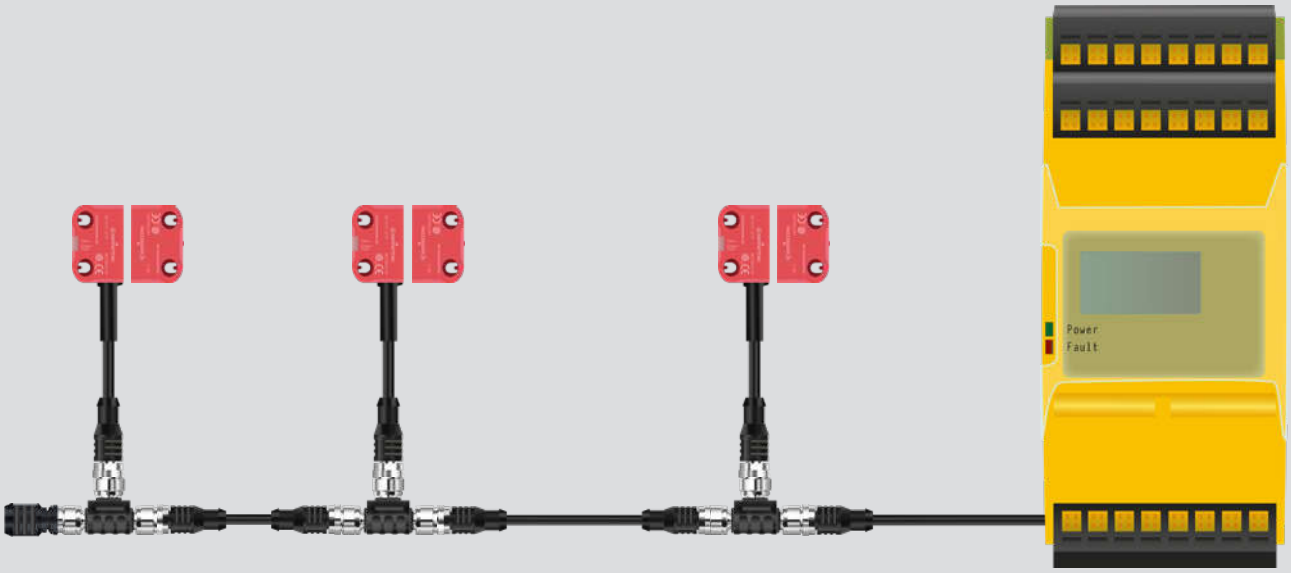

Various cable lenght options

Article number	Designation	Unique	High coding level	Low coding level	PNP diagnostics	Daisy chain diagnostics (DCD)	Reset input	M12 8-pin connection with 25 cm cable
6075685094	SRF-4/1/1-E0,25-U	x			x			x
6075685095	SRF-4/1/1-E0,25-H		x		x			x
6075685096	SRF-4/1/1-E0,25-L			x	x			x
6075685097	SRF-4/2/1-E0,25-U	x			x		x	x
6075685098	SRF-4/2/1-E0,25-H		x		x		x	x
6075685099	SRF-4/2/1-E0,25-L			x	x		x	x
6075685100	SRF-5/1/1-E0,25-U	x				x		x
6075685101	SRF-5/1/1-E0,25-H		x			x		x
6075685102	SRF-5/1/1-E0,25-L			x		x		x
6075685080	SRF-5/2/1-E0,25-U	x				x	x	x
6075685103	SRF-5/2/1-E0,25-H		x			x	x	x
6075685104	SRF-5/2/1-E0,25-L			x		x	x	x
6075687078	SRF-0	Actuator SRF, suitable for all coding levels (not included, please order separately)						

SRF for single connection

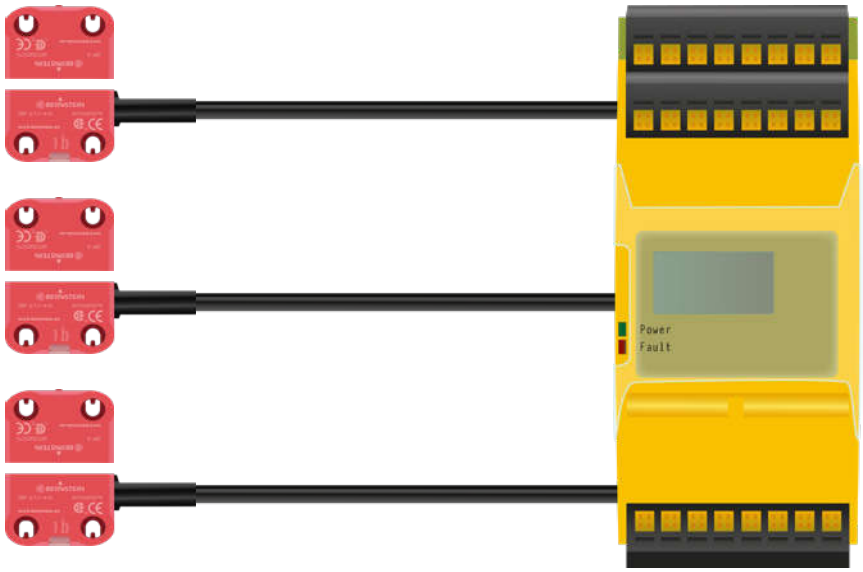

Article number	Designation	Unique	High coding level	Low coding level	PNP diagno-stics	M12 5-pin connection with 25 cm cable	2 m cable with open cable end
6075685117	SRF-2/1/1-A2-U	x			x		x
6075685079	SRF-2/1/1-A2-H		x		x		x
6075685118	SRF-2/1/1-A2-L			x	x		x
6075685119	SRF-2/1/1-E0,25-U	x			x	x	
6075685120	SRF-2/1/1-E0,25-H		x		x	x	
6075685121	SRF-2/1/1-E0,25-L			x	x	x	
6075687078	SRF-0	Actuator SRF, suitable for all coding levels (not included, please order separately)					

Diagnostic module

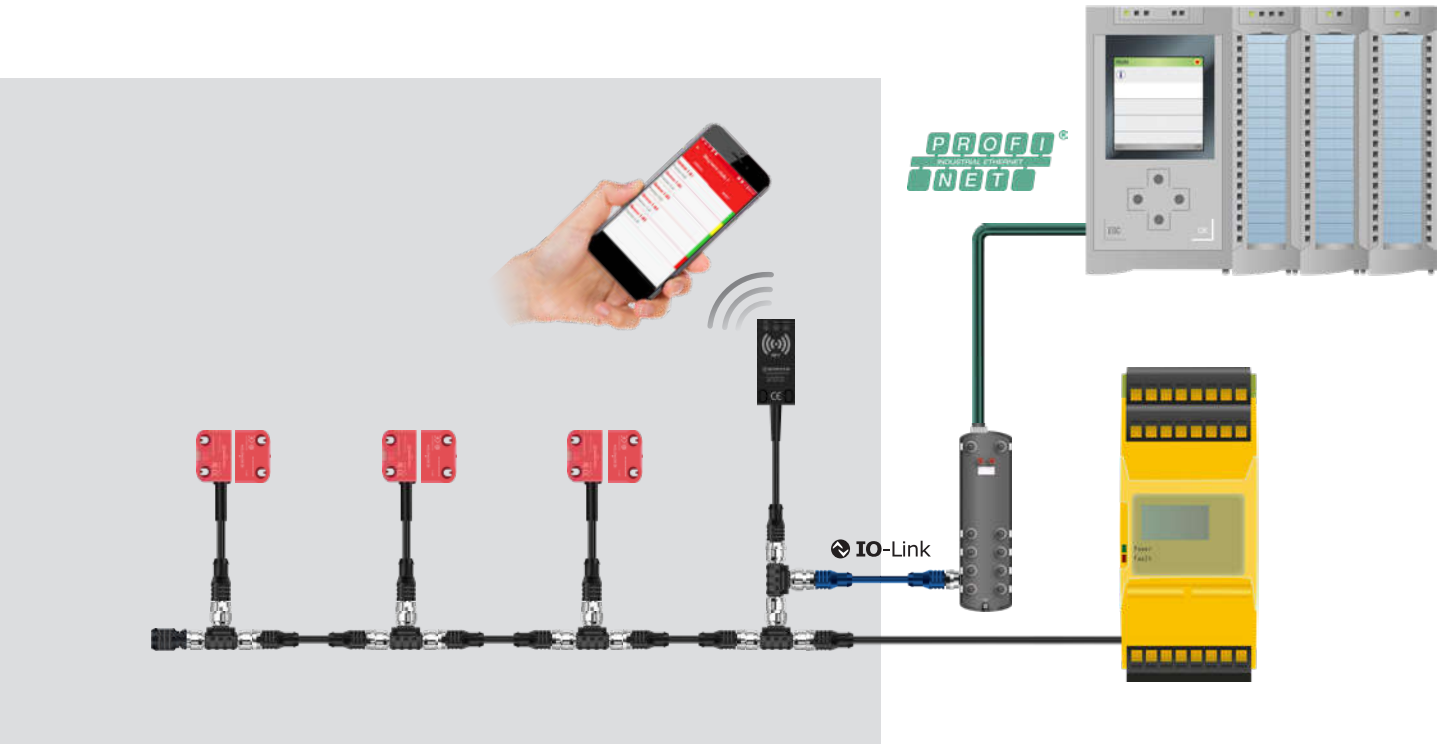

Article number	Designation	Enclosures	Number of diagnostic circuits	Digital output	Interfaces		
					I/O Link	NFC	USB 2.0
6075619122	SRF DI-C-0/1-T	DIN rail housing 22,5 mm	1	-	x	x	x
6075619123	SRF DI-C-8/1-T	DIN rail housing 22,5 mm	1	8	x	x	x
6075619124	SRF DI-C-16/1-T	DIN rail housing 22,5 mm	1	16	x	x	x
6075619125	SRF DI6-C-0/1-T	DIN rail housing 22,5 mm	6	-	x	x	x
6075689126	SRF DI-F-0/2-E0,25	Rectangular sensor enclosure (use directly at the machine)	1	-	x	x	

Accessories



Connection cable and connecting cable

Pos.-Nr.	Article number	Designation	Description	Plug alignment	Plug 1	Plug 2	Number of plugs	Cable length in meter
1	6075689085	S1W-M12A8/BW-1PU	Connecting cable	straight	M	F	8	1
1	6075689086	S1W-M12A8/BW-2PU	Connecting cable	straight	M	F	8	2
2	6075689087	S1W-M12C4/AW-2PU	Connecting cable	straight	M	F	4	2
2	6075689088	S1W-M12C4/AW-5PU	Connecting cable	straight	M	F	4	5
2	6075689089	S1W-M12C4/AW-10PU	Connecting cable	straight	M	F	4	10
3	6075689092	SFW-M12B5/AW-2PU	Connection cable	straight	F		5	2
3	6075689093	SFW-M12B5/AW-5PU	Connection cable	straight	F		5	5
3	6075689090	SFW-M12C4/AW-0,5PU	Connection cable	straight	F		4	0,5
3	6075689091	SFW-M12C4/AW-2PU	Connection cable	straight	F		4	2

T adapter, termination plug and fixing screws

Pos.-Nr.	Article number	Designation	Description
4	6075989082	ATS-M12/4-M12/8	T adapter for series connection
5	6075989083	ATD-M12/8-M12/4	T adapter for connection of I/O link and reset button
6	6075689084	AEP-M12/4	Termination plug M12
	6075689127	AT-CLIP-M12	Fixing clip for T adapter
	6075689128	One-way screw M4 × 16	10 × Fixing screws M4 × 16 One-way screw

Technical data
SRF

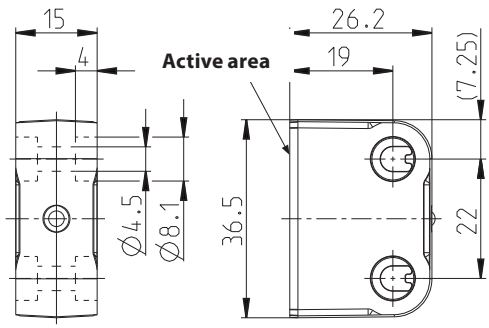

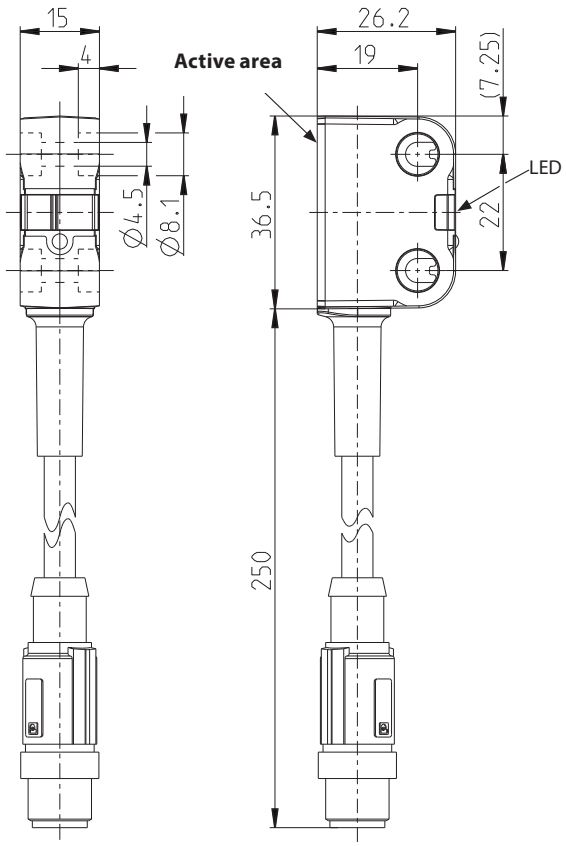

Electrical data

- Rated operational voltage U_e: 24 V
- Output current of the safety outputs I_e: 100 mA
- Output current of the message output I_e: 10 mA

Mechanical data

- Housing: PA66 + PA6, red, self-extinguishing
- Connection cable: PUR
- Mounting holes: Ø 4,5 (for M4 screws)
- Displays: 1 × LED red/green operating status
  1 × LED yellow actuation status
- Ambient temperature: -25 °C to +70 °C
- Protection class: IP69

Safety data sheet

- PL e / Kat. 4 (according to EN ISO 13849-1)
- SIL CL 3 (according to DIN EN 62061)
- $PFH_D = 6 \times 10^{-9}$ 1/h
- Mission time T_M: 20 years

- Switching distance:
  - Rated operating distance S_n: 13 mm
  - Assured switching distance – On S_{ao}: 10 mm
  - Assured switching distance – Off S_{ar}: 25 mm
  - Hysteresis: 2 mm

- Switch-off delay t_a: max. 100 ms
- Ready delay t_v: max. 2 s

Technical data
Diagnostic module

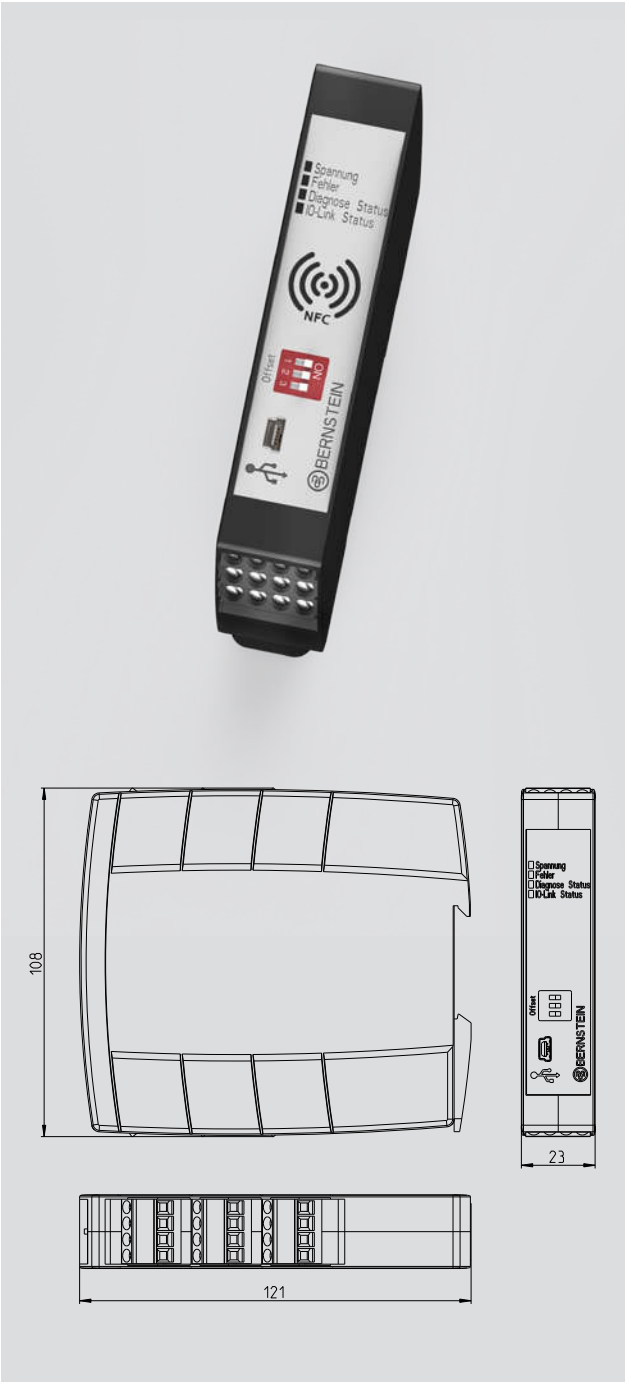

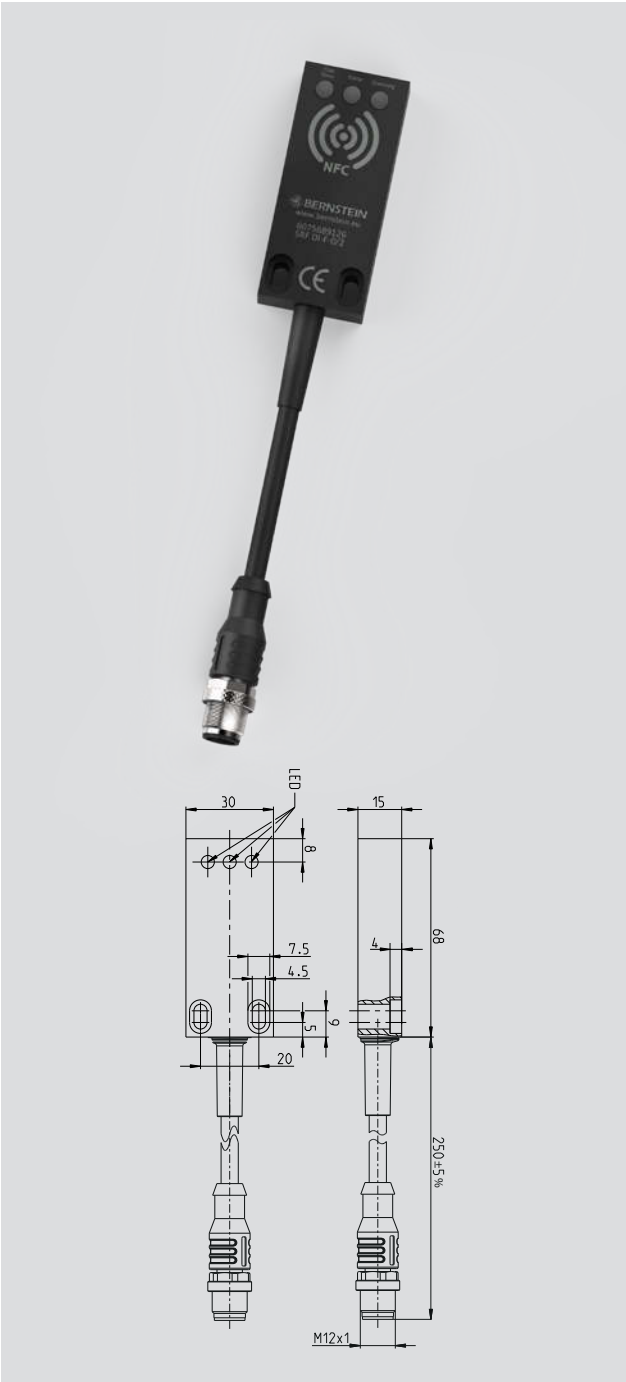

Cabinet module

- Rated operational voltage U_e: 24 V DC
- I/O Link protocol: V1.1
- Output current per signal output I_e: 50 mA
- Ambient temperature: 0 °C to +60 °C
- Protection class: IP20

Field module

- Rated operational voltage U_e: 24 V DC
- I/O Link protocol: V1.1
- Output current per signal output I_e: –
- Ambient temperature: -25 °C to +70 °C
- Protection class: IP69

Type code

SRF

	Product type		Reset function		Safety output rating		Connection		Coding
SRF-	5	/	1	/	1	-	E0,25	-	H

Product type	
0	Actuator
2	Single connection with PNP diagnostics
4	Series connection with PNP diagnostics
5	Series connection with DCD system

Reset function	
1	Without reset
2	With reset

Safety output rating	
1	Output current of the safety outputs = 100 mA

Connection	
A#	Cable with open end (# = Length in meter)
E#	Cable with M12 connector (# = Length in meter)

Coding	
U	Unicode
H	High
L	Low

Diagnostics modules

	Product type		Construction		Number of PNP outputs		Interfaces		Connection
SRF	DI	-	C	-	8	/	1	-	T

Product type	
DI	Diagnostics module for a diagnostics chain
DI6	Diagnostics module for 6 diagnostics chains

Construction	
F	Small angular enclosure for field mounting
C	Top hat rail housing for cabinet mounting

Number of PNP outputs	
0	0 × PNP Out
8	8 × PNP Out
16	16 × PNP Out

Interfaces	
0	No more interfaces
1	I/O Link + NFC + USB
2	I/O Link + NFC

Connection	
T	Connection terminals
E#	Cable with M12 connector (# = Length in meter)

Safety relay
SCR ON

The SCR ON safety relay monitors the SRF's safety outputs.



Features

- PL e to ISO 13849
- 3 enabling paths
- Feedback loop with monitored / automatic reset

Article number	Designation
6075111020	SCR ON4-W22-3.6-S

BERNSTEIN

DETECT

We make
safety happen.

PROTECT

We keep safe
your visions.

700 0001 167 . 04.2018 . Subject to alterations.

Contact

International Headquarters
BERNSTEIN AG
Hans-Bernstein-Str. 1
D–32457 Porta Westfalica
Phone +49 571 793-0
Fax +49 571 793-555
info@de.bernstein.eu
www.bernstein.eu

Denmark
BERNSTEIN A/S
Phone +45 7020 0522
Fax +45 7020 0177
info@dk.bernstein.eu

France
BERNSTEIN S.A.R.L.
Phone +33 1 64 66 32 50
Fax +33 1 64 66 10 02
info@fr.bernstein.eu

Italy
BERNSTEIN S.r.l.
Phone +39 035 4549037
Fax +39 035 4549647
info@it.bernstein.eu

United Kingdom
BERNSTEIN Ltd
Phone +44 1922 744999
Fax +44 1922 457555
info@uk.bernstein.eu

Austria
BERNSTEIN GmbH
Phone +43 2256 62070-0
Fax +43 2256 62618
info@at.bernstein.eu

Switzerland
BERNSTEIN (Schweiz) AG
Phone +41 44 775 71-71
Fax +41 44 775 71-72
info@ch.bernstein.eu

Hungary
BERNSTEIN Kft.
Phone +36 1 4342295
Fax +36 1 4342299
info@hu.bernstein.eu

China
BERNSTEIN Safe Solutions
(Taicang) Co., Ltd.
Phone +86 512 81608180
Fax +86 512 81608181
info@bernstein-safesolutions.cn